TRIADA
TECHNOLOGIES

Triada Sealing Guide

#Sealing**Excellence**

TRIADA

Triada Sealing Guide

Important Information

Utmost care has been taken in the preparation and completion of this guide, but still it is not guaranteed that this is devoid of any typographical or inadvertent errors or omissions. Hence, Triada shall not be responsible for the end user's reliance on such errors or omissions. Information or data in this guide which includes and not limited to product profiles, product features, specifications etc. may be amended or modified at the sole discretion of Triada Technologies India Pvt. Ltd. (TTIPL) without any notice or prior intimation.

TTIPL strongly urge its customers and associates to validate the products that are being offered, to ensure its suitability and performance, based on their applications, hardware & operating conditions, through their own analysis and testing.

DOC. NO.: TT/AE/CAT/FE/03-2023

Table of Content

1 **Introduction** 02-03

2 **Technical & Material Parameters for Hydraulic Seals** 04-32

3 Piston Seals A1

4 Rod Seals B1

5 Wiper Seals C1

6 Static Seals D1

7 Wear Rings E1

8 Rotary Seals F1

9 **Storage Guideliness**

10 **Technical Proposal Request**

Introduction

Triada® Technologies - Sealing technology provider for your complete Hydraulic & Pneumatic Sealing applications.

Over the past several decades, Hydraulic & Pneumatic industry have grown multifold to meet the ever increasing customer demands and also to cope with the industry requirements. Along with this, the sealing technology also has seen a phenomenal advancement in technology in terms of material development, seal designs, hardware finishing methodology, assembly processes etc, there by offering a wide range of options, many a times putting the customer into confusion. TTIPL, relying on their years of experience and expertise in the Hydraulic & Pneumatic sealing field, is putting their earnest effort to assist their customers overcome this difficulty, by explaining the various aspects and fundamentals of sealing system designs and related technology.

Intent of this guide is to provide our esteemed customers a wide portfolio of sealing elements, using which the user or designer can evaluate the capabilities or limitations of each of these elements and there by evolve/arrive at the most appropriate sealing system for their applications. Needless to mention that the expert team at Triada® is still available at your service to assist you in this aspect and also please note that Triada® can support you with custom designed seals/ material formulations to help the customers meet any challenging requirements.

Triada® works in partnership with some of the best known seal manufacturers in the world, to bring in the most innovative technology and quality products to the industry. Our Value added services combined with our capability to design new products, best in class sourcing expertise, logistic management, cost optimization and our unbeatable customer service shall be vital in your efforts to engineer world class products – technically & commercially.

This guide also provides certain technical information, which finds its usage while selecting the best sealing system for your application. It has been our earnest desire to provide a comprehensive catalogue giving all necessary information to the designers/users, while at the same time putting our efforts to ensure that Triada® shall be a one stop provider for all your sealing requirements

Introduction

Standard Compounds:

The compounds indicated in the guide are mostly standard in nature, which suffice for most of the common applications that one may come across in the industry. Triada's Technical Team is in a position to develop new compounds, as required to meet your challenging applications, working closely with the R&D personal of their suppliers globally.

Standard/ Preferred Profiles:

The guide provides details on all standard or preferred profiles, which addresses most of the applications across segments. Kindly note that the profiles are not limited to the ones indicated in this guide, but can be extended as Triada® team can support your custom needs by designing apt sealing profiles, suiting to your applications.

Standard Sizes:

The guide provides an extensive list of sizes of seals those are available from our portfolios. But we would suggest you to follow the ISO/DIN standards as this ensures easy availability and also commercially more viable in terms of MOQ and cost. These sizes are indicated in bold, to assist with the selection.

Kindly note that all the sizes indicated in this guide may or may not be available at any point of time. In case of non-availability a MOQ may be applicable or tooling charge may be applicable or both may be applicable along with varying delivery lead times. At the discretion of Triada Technologies India Pvt. Ltd. part numbers/ sizes may be deleted or added, based on market feedback or commercial viability or for other valid reasons.

Technical Parameters for Hydraulic Seals Content

1 Principle of Sealing

2 Stick-Slip Phenomenon

3 Extrusion

4 Installation of Techniques

5 Hardware Surface Finish

6 Comparison between Shore & Rockwell Hardness range

7 NAS Cleanliness Codes

8 Heat Treatment

9 Tolerances

10 Viscosity

11 Examples of Seal Failure & It's Causes

12 Conversion Tables

Technical Parameters for Hydraulic Seals

1. What is the Principle of Sealing ?

Any seal, be it in a static or dynamic application, is expected to seal against two mating surfaces. In the case of a static application, there is no relative motion between the two surfaces, whereas in the case of dynamic application, either one surface is in motion relative to the other or it can be even that both surfaces are moving in the same direction or may be in opposite directions, increasing the relative speed. In a Hydraulic Cylinder, one can see both static (as in between the Piston and Piston Rod or those seals in the glands) as well as dynamic seals (like the Piston Seals and also the Rod Seals) in use.

The Seals in the installed condition is in a preloaded condition or a certain calculated squeeze is imparted, which is very important to ensure that the sealing surfaces are in proper contact, thereby avoiding or preventing the leakage. In the case of Dynamic Sealing system, several other factors also need to be considered in the selection of the right seal for the application, resulting in a satisfactory performance.

1.1 Technology of Leakage Control

The ultimate objective of a sealing system is to provide a zero leakage hydraulic or pneumatic system. The advancements in the Sealing Material Technology as well as the capabilities in designing the best possible sealing profiles have made it possible to offer a zero leakage sealing system coupled with the lowest friction, optimal cost, easy hardware design, long service life, compatibility with several media, simpler hardware requirements etc. When choosing a sealing system, the desired result is ultimately leakage control.

One now needs to look at it as a sealing system and not as a combination of sealing elements, as in this way, each seal compliments the other sealing element and thereby delivering the best as a sealing system. This is how a Triada® sealing system shall perform; complementing each other element, finally delivering a high performance sealing system.

This sort of an approach is best seen in the case of a Rod Sealing System (not limited to) as in most of the Rod Sealing Systems, each element has to work in synchronized manner with the other, so that a complete leak proof system is ensured. For example a team of TRITILT® along with a Buffer Seal or U-Cup Seal and a Wiper Seal, of course Wear Rings also playing a major role in the system.

Technical Parameters for Hydraulic Seals

2. Stick-Slip Phenomenon

- Sliding of one body over another, under steady pulling force results in:
  - Sometimes at constant or near constant velocity
  - On other occasions at velocity which fluctuates widely
- If the friction force or sliding velocity does not remain constant as a function of distance or time and produces oscillations, it could be due to a phenomenon known as stick-slip phenomenon
- During stick phase, the friction force builds up to a certain value, and once a large enough force has been applied to overcome the static friction force, slip occurs at the interface
- Usually, a saw tooth pattern in friction force-time curve is observed during stick-slip process

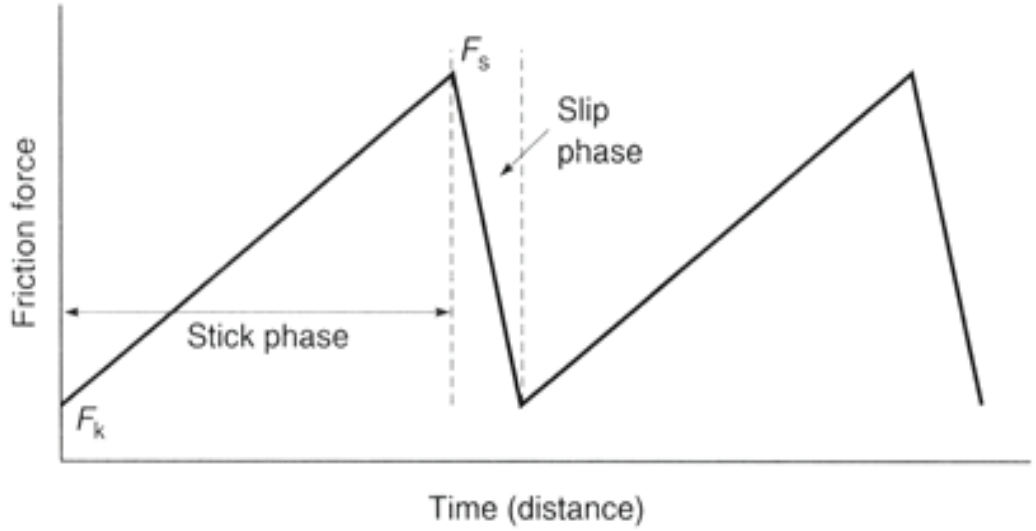

Fig 2.1: Friction force as a function of time or distance showing stick-slip phenomenon

Technical Parameters for Hydraulic Seals

The stick-slip process generally results in vibrations of the sliding system, resulting in:
- Audible squeal (~ 0.6-2 kHz) and
- chatter (<0.6 kHz)

In most sliding systems, the fluctuation of sliding velocity (or unstable motion) resulting from the stick-slip process and associated squeal and chatter are considered undesirable and measures are taken to eliminate or reduce the amplitude of the fluctuations

The stick-slip process can be responsible for

- Squeal and chatter in bearings
- Jerking of brakes
- Chatter of windshield wipers on partly wet window glass
- Inaccuracies in machining and positioning

The elasticity, damping and frictional properties are critical in the occurrence of stick-slip process.

Technical Parameters for Hydraulic Seals

2.1 Mechanism of Stick-Slip

- The coefficient of static friction, μs is greater than the friction, μk
- This feature together with the natural elasticity of any mechanical system leads to the troublesome stick-slip phenomenon
- The variation of kinetic coefficient of friction with velocity may also contribute to oscillations at higher sliding velocities and hence stick-slip process In any case where the coefficient of kinetic friction is less than the coefficient of static friction there will exist a tendency for the motion to be intermittent rather than smooth.
- The two contact surfaces will stick until the sliding force reaches the value of the static friction. The surfaces will then slip over one another with a small-valued kinetic friction until the two surfaces stick again.
- In figure 2.2a below, V is a drive system, R is the elasticity in the system, and M is the load that is lying on the floor and is being pushed horizontally.
- When the drive system is started, the Spring R is loaded and its pushing force against load M increases until the static friction coefficient between load M and the floor is not able to hold the load anymore.
- The load starts sliding and the friction coefficient decreases from its static value to its dynamic value. At this moment in fact the spring can give more power and accelerates M.
- During M's movement, the force of the spring decreases, until it is insufficient to overcome the dynamic friction. At this point, the mass M stops.
- The drive system however continues, and the spring is loaded again etc.

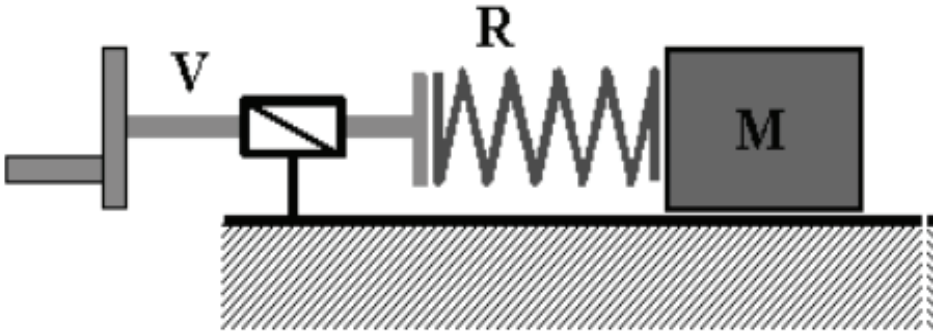

Fig 2.2a

Technical Parameters for Hydraulic Seals

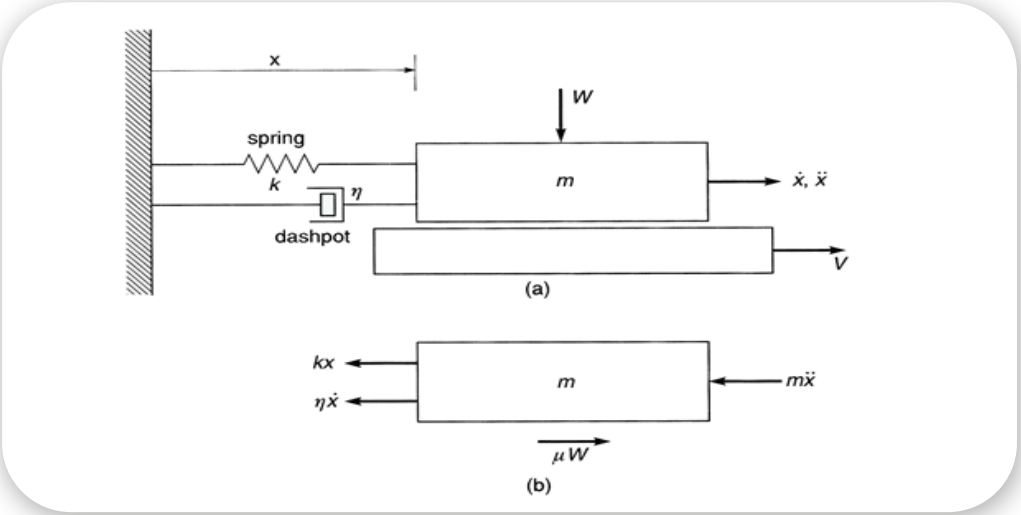

Fig 2.2b Free body diagram of the block

A friction test apparatus of a rough horizontal body sliding relative to a block restrained by a spring element and a dashpot

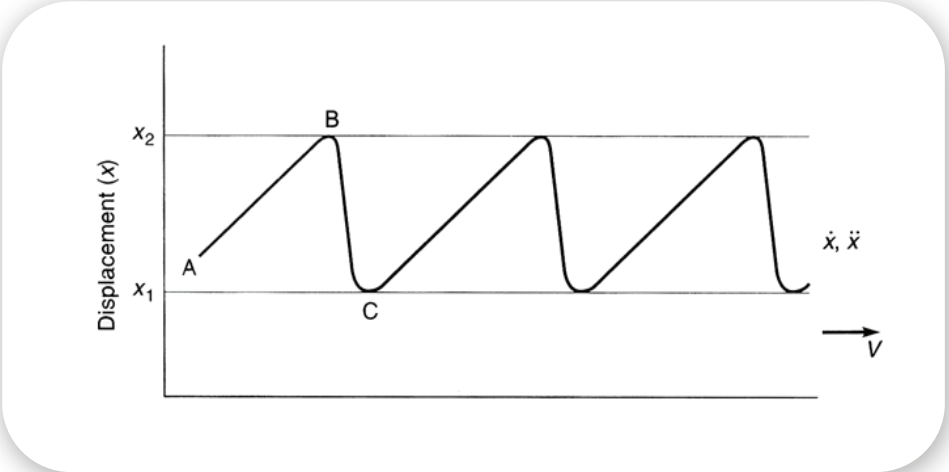

Fig 2.2c: Displacement of the block as a function of time during stick-slip behavior

Technical Parameters for Hydraulic Seals

2.2 Elimination or suppression of stick-slip

- Choose friction pair so as to keep the difference between static and kinetic coefficients of friction i.e., μs-μk very small
- This is usually achieved by covering one of the component surfaces by a boundary lubricant film Select friction pairs which exhibit a positive μk-V characteristics (slope) at the sliding velocity employed
- This may require the use of soft metal films which exhibit the desired properties
- For most metals, μk decreases as velocity increases and with softer metals & polymers, μk may increase with increasing velocity up to some rather low velocity; at higher velocities, the friction then decreases
- There is a specified maximum velocity up to which stick-slip doesn't occur
- Design the mechanical system so that the amplitude of any such oscillations would be very small This can be done by reducing the system compliance i.e., by making the spring as stiff as possible (i.e., by using suitable materials) and/or increasing both the component inertias and the system damping.

2.3 Rolling friction

Three cases:

Free rolling (no plastic deformations in the contact)

Rolling with shear stresses at the contact surface (braking or accelerating without gross slip)

Rolling where slip is occurring at the contact surface

3. Extrusion

Extrusion occurs when fluid pressure forces the seal material into the clearance gap between mating hardware. Dynamic motion further promotes extrusion, as surfaces in motion tend to pull material into the extrusion gap, generating additional frictional forces and heat. This can cause premature failure via several modes. Extruded seal material can break away and get caught underneath sealing lips, creating leak paths. As material continues to break away, seal geometry erodes, causing instability and eventual leakage. Additionally, heat generated from added friction will cause the seals to take a compression set, dramatically shortening their life.

Technical Parameters for Hydraulic Seals

Careful design considerations should be evaluated to prevent extrusion. For example, minimizing clearance gaps and selecting a proper material based on system temperature, pressure and fluid are both helpful in reducing the risk of extrusion. As clearance gaps increase, less pressure is required in order for extrusion to occur. Higher temperatures can also play a role in this effect by causing seal materials to soften, encouraging extrusion at lower pressures. If the seal material chosen is not suitable to be used in the system fluid, softening due to chemical attack can also decrease its ability to resist extrusion.
The following Table 3-1 lists possible causes of extrusion and troubleshooting tips for preventative or corrective measures.

Possible Causes
Large extrusion gaps
High operating temperature
Soft materials
High system pressure
Pressure spikes
Side loading
Wear rings
Chemical compatibility
Troubleshooting Tips
Reduce extrusion gaps
Check gland dimensions
Replace commercial grade wear rings with tight tolerance wear rings
Incorporate back-up rings
Evaluate size and positioning of wear rings for side load resistance
Consider harder, higher modulus and tensile strength compound
Match seal compound for pressure, temperature and fluid compatibility

By definition, the radial gap is one-half of the diametrical gaps. The actual extrusion gap is often mistaken as the radial gap. This is too optimistic in most cases because side loading of the rod and piston will shift the diametrical clearance to one side. Often, gravity alone is sufficient for this to occur. Good practice is to design around worst case conditions so that extrusion and seal damage do not occur. Table 3-2 provides maximum radial extrusion gaps for various seal compounds.

Technical Parameters for Hydraulic Seals

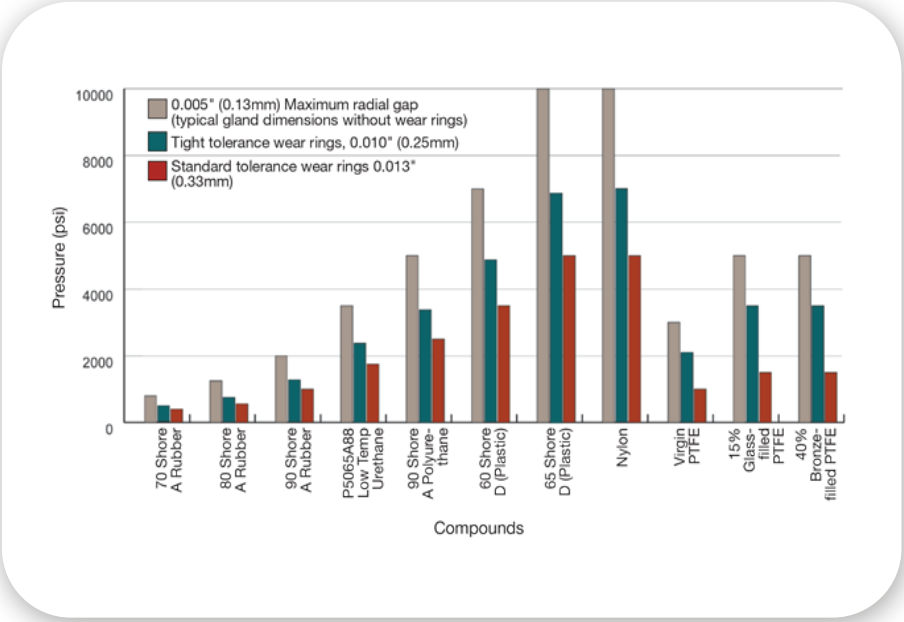

Table 3-2 Typical Pressure Ratings for Standard Seal Compounds in Reciprocating Applications at +160°F (see Note)

Note: Pressure ratings are based upon a test temperature of +160°F (+70°C). Lower temperatures will increase a material's pressure rating. Higher temperatures will decrease pressure ratings. Maximum radial gap is equal to the diametrical gap when wear rings are not used. Wear rings keep hardware concentric, but increase extrusion gaps to keep metal-to-metal contact from occurring, thereby decreasing pressure ratings when used.

As noted in Table 3-2, pressure ratings decrease when wear rings are used due to the larger extrusion gaps required eliminating metal-to-metal contact. If wear rings are used, be sure to consult for appropriate hardware dimensions. Wear ring hardware dimensions for the piston and rod throat diameters always supersede those dimensions called out for the seals themselves.

4. Installation Techniques

Installation of seals is equally important as selection of the most appropriate sealing system.

Of course, on account of the facilities available, the installation process may vary between the one carried out within a manufacturing facility and the one carried out on the field for a replacement or maintenance need. Installation of seals, in case of a closed groove is mostly suggested with the use of appropriate assembly tools. Triada supports its Customers by providing appropriate installation tool designs and also train the staff, to ensure that the right process has been followed without damaging the seals. But, in the case of an open groove or a split gland design, the installation of seals is rather straight forward even though it poses additional challenges in hardware manufacturing

Technical Parameters for Hydraulic Seals

Listing down some of the common concerns associated with all installation procedures:

4.1 Overall Cleanliness

The entire surroundings should be free of dust and dirt, so that the seals, hardware, installation tools and such other all associated components shall be protected appropriately. Still it is suggested to clean all components with a lint free cloth, just prior to assembly.

4.2 Hardware Conditions

Seals, which is mostly the softest component in the whole assembly, can easily get cut or damaged while coming in contact with threads, sharp edges, burr etc. Utmost care is to be taken to avoid all such possibilities and in case the seal has to pass over a threaded area, appropriate sleeves (see Fig. 4.1) to be used to protect the seals from getting damaged. A good practice of deburring all holes, edges and other sharp edges is suggested which can also prevent human causalities. The threat from burrs is that even though it may not cut the seals while assembling, it can so happen that these get detached while in operation, after several cycles, leading to chaotic situations.

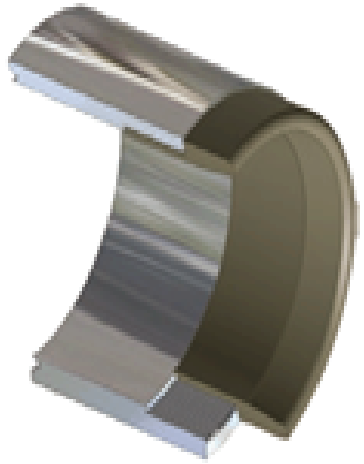

Fig 4.1 Thread protection installation tool cutaway view

Technical Parameters for Hydraulic Seals

4.3 Lubrication

The Seal Grooves, the installation area/path and also the seals could be lubricated before the installation of the seals. Of course, care has to be taken to see that dust does not settle down on such lubricated surfaces as these are very prone to attract dust particles. It is always preferable to use the working media itself as the lubricant, as in such a case the compatibility concern of the lubricant with the seal material also shall be automatically taken care of. It is advised to handle the lubricated hardware carefully to avoid any human accidents as the lubricated hardware's shall be slippery in nature.

Table 4-1 Seal Installation Lubricants

Type	Temp. Range °F (C)	Seal Use	Seal Material Compatibility
Petroleum base (Parker O Lube)	-20 to +180 (-29 to +82)	Hydrocar- bon fluids; Pneumatic systems under 200 psi	Molythane Resilon®. Polymyte Nitroxile®, HNBR, NBR, FKM, (DO NOT use with EPR)
Silicone grease or oil (Parker Super O Lube)	-65 to +400 (-54 to +204)	General purpose; High pressure pneumatic	Molythane, Resilon, Polymyte, Nitroxile, HNBR. NBR, EPR, FKM
Barium grease	-20 to +300 (-29 to +149)	Pneumatic systems under 200 psi	Molythane, Resilon, Polymyte, Nitroxile, HNBR, NBR, FKM
Fluoro- carbon fluid	-65 to +400 (-54 to +204)	Oxygen service	EPR

4.4 Entry or Lead-in Chamfer

A generous entry or lead-in chamfer is a must to avoid seal damages while it enters the Bore or Rod and in cases where such a provision is absolutely not possible, it is suggested to use appropriate assembly tools to guide the seals properly without getting damaged. Refer to Figure 4.2.

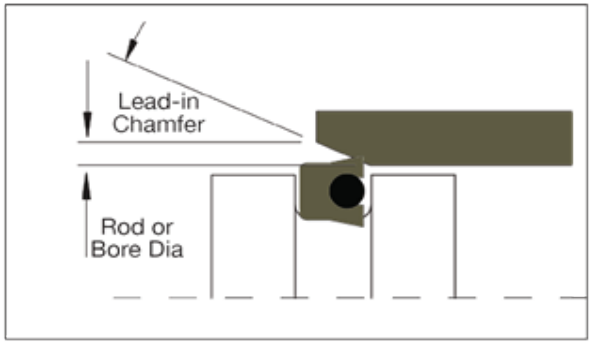

Fig 4.2 Seal installation lead-in chamfer

Technical Parameters for Hydraulic Seals

4.5 **Seal Flexibility**

There are instances where the seals may not be that flexible as in the case of seals with larger cross-sections or fabric-reinforced compounds etc, which are to be installed by stretching over the hardware or may be in snap-in type of assemblies. The elasticity of the seals may be not enough to assist the stretching of the seal or even to deform the seal into the grooves. Depending on the seal material, profile etc., and the seals could be soaked in a heated bath of oil whereby the seal could soften down and thus aid the installation process. The maximum temperature of the bath is to be decided carefully, but normally a temperature of around 60 to 80 Deg C, would suffice, which is also within the applicable range of most of the seal materials. In case one needs any guidance on the right temperature and the process, please free to contact Triada® Application Engineering, who shall be pleased to assist you. Kindly note that the seals should never be heated in a stretched condition, as it can deliver undesired results, rather than assisting in the installation process.

4.6 **Installation Tools**

It is always suggested to make use of an installation tool, particularly in the case of assembling of external sealing application. Also, in the case of internal sealing, necessary resizing of the seals to be carried out before the insertion of hardware.

External Sealing (Piston Sealing)

The installation of Piston Seals shall be easier, effective and damage free, with the use of right installation tools. This is more so important in the case of smaller diameters, as in the case of larger diameters, it is comparatively easy to expand the seal and slide it over the piston. In the case of high volume assemblies usage of installation tools shall help increase productivity and also improves the reliability of the seals on account of right installation. Please take note if the following important points, while carrying out installation of external sealing elements:

- Ensure that all hardware, assembly tools etc. are free of any contamination, burrs or sharp edges. If necessary clean, deburr or rework the parts so as to take care of the above aspects.
- Just prior to the installation of the seals, it is a good practice to look for any anomalies in the grooves (as to groove radius etc.) and also see that the installation tools are also free of any damages. It is suggested to use these installation tools in materials like Nylon, Delrin etc., so that even if there is slight damage on the tools, it may not end up damaging the costly sealing elements.
- If the Seal is with an energizing element like an O-Ring, which is the case mostly for PTFE based seals (for example a TRIGLIDE), install the O-ring or the energizer seal into the groove, taking care that the O-Ring is not in a twisted condition.

Technical Parameters for Hydraulic Seals

- Place the expanding cone on to the piston, which is the right cone for the Piston where the seals are being assembled.
- Smearing of lubricating oil and/or soaking in warm oil (+60 to 80°C max) would assist the installation process. Please refer to the section above on Seal Flexibility.
- Position the seal on the expanding cone and using an expanding mandrel, gently push the seal along the taper until it is positioned in the right groove.

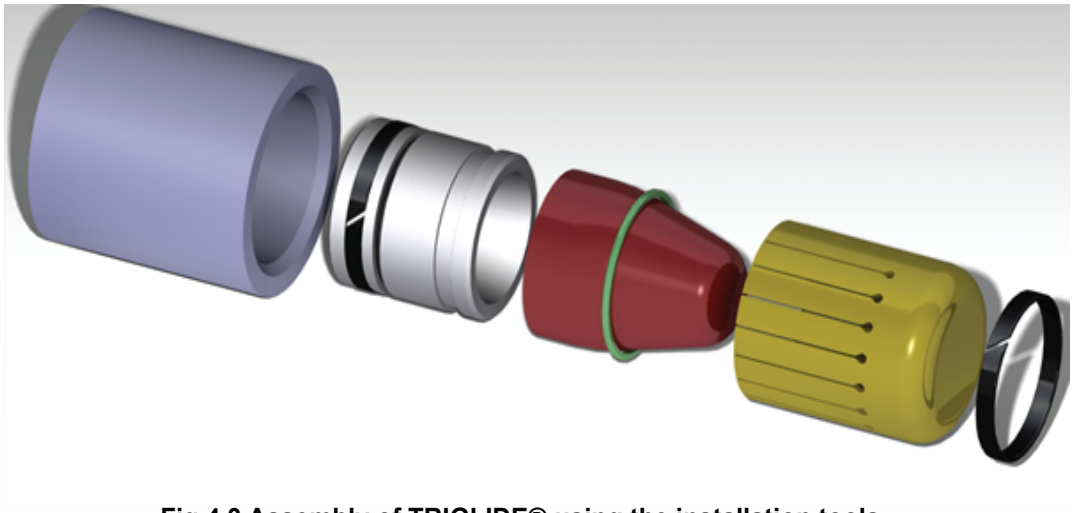

Fig 4.3 Assembly of TRIGLIDE® using the installation tools

- In the case of PTFE based seals, it is suggested to resize the seal to as close as to the Cylinder Bore Dia, using a resizing sleeve. This will help during the actual assembly of the Piston into the Cylinder Bore, reducing the force required for the assembly.

Technical Parameters for Hydraulic Seals

For ROD Seals

Unlike External Seals or Piston Seals, most of the Rod Seals is possible to be assembled by hand. Of course, in the case of PTFE Seals it requires a resizing tool, to resize the seal to its actual dimension. Depending on the seal profile, there is a minimum size stipulation, below which it calls for a split groove design. The following guidelines provide the steps for proper rod seal installation.

- Ensure that all hardware, assembly tools etc are free of any contamination, burrs or sharp edges. If necessary clean, deburr or rework the parts so as to take care of the above aspects.
- Just prior to the installation of the seals, it is a good practice to look for any anomalies in the grooves (as to groove radius etc) and also see that the installation tools are also free of any damages. It is suggested to use these installation tools in materials like Nylon, Delrin etc, so that even if there is slight damage on the tools, it may not end up damaging the costly sealing elements.
- If the Seal is with an energizing element like an O-Ring, which is the case mostly for PTFE based seals (for example a TRITILT), install the O-ring or the energizer seal into the groove, taking care that the O-Ring is not in a twisted condition.
- Carefully and gently fold the seal into a kidney shape as shown in the below figure 4.4 and place the seal in the right groove, taking care of the direction of the seal. Three prong installation tools are also available, which can be easily used in the case of assembly of Elastomer Seals. Once the Seal is positioned in the groove, use the fingers to push the seal into the circular position.

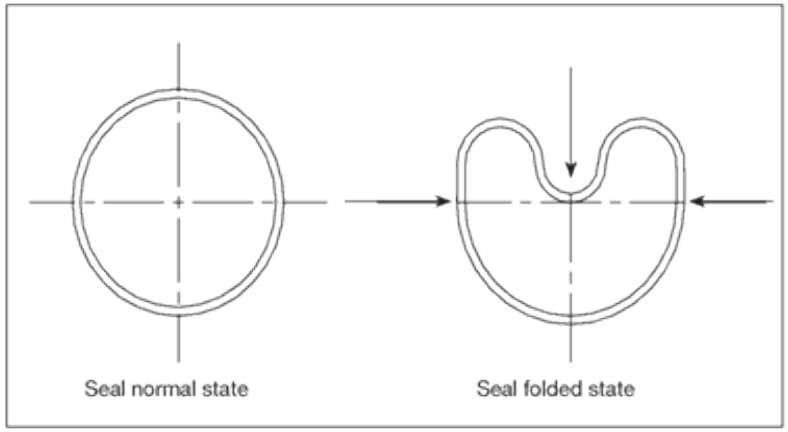

Technical Parameters for Hydraulic Seals

- After unfolding the PTFE seals inside the groove, it is suggested to use a resizing tool as shown below so as to ensure that the seal is almost resized to the Rod Diameter, thereby preventing any damage to the seals while inserting the Piston Rod. Kindly feel free to contact Triada Application Engineering, for further information or support on these tool designs.

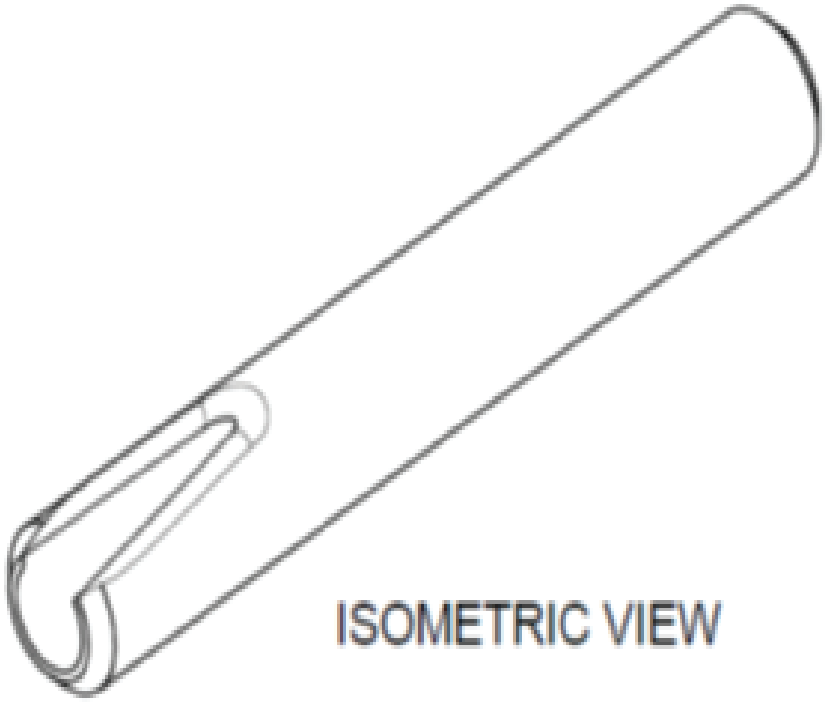

Fig 4.5 Installation Mandrel for rod seals

Technical Parameters for Hydraulic Seals

Hardware Surface Finish

Implementing the right process to achieve recommended surface finish specifications is of utmost importance and would like to emphasize that this aspect is equally important as selection of the right sealing system. Maintaining the right combination of Surface Finish Parameters can bring in positive effects on the longevity of a sealing system. In a dynamic sealing surface, microscopic undulations form recesses which hold an oil film between the seal lip and the sliding surface. If the surface is too smooth, friction and seal wear will be high because of the absence of this oil film. If the surface is too rough, the variations will create leak paths and accelerate lip wear. Additionally the so called peaks will be adequately high enough to create hurdles for the smooth seal movement and thus forms an abrasive surface for the sealing lip. For these reasons, it is critical to have an in depth understanding of surface

finishes as they more importantly pertain to dynamic sealing systems. Triada recommends following the guidelines for surface finish as outlined below or would suggest conducting individual testing for specific applications so as to validate seal behavior and resulting life. Over a period, great emphasis has been given to this topic and several studies have been carried out as aspects like warranty, service life etc. has been projected as major criteria by the end users. Advanced measuring equipment's and systems are in place to measure the surface finish parameters and accordingly several new machineries are available to deliver the surface finish requirements, thereby making the subject of surface finish has become more complex.

Profile meters are now commonly used to achieve precise measurements with repeatable results. In the same way, the terms used to define a surface finish have also advanced. For many years, a single surface parameter has often been used to quantify surface finish. RMS (also known as Rq) stands for Root Mean Square and has historically been the most typical value. In more recent years, the Arithmetic Average Roughness, Ra, has become more frequently specified. Using either of these parameters by itself is inadequate to define a proper reciprocating sealing surface. Figure 5.1depicts why this parameter alone cannot accurately describe a surface finish.

Three surface finishes shown in Figure 5.1all have the same Ra value but very unique characteristics. The first profile (A) is an example of a proper surface finish for dynamic seals in which the sharp peaks have been minimized or removed. The second profile (B) will exhibit high wear characteristics because of the wide spacing between the peaks. The third profile (C) will also wear out the seals quickly because of its extremely sharp peaks.

Technical Parameters for Hydraulic Seals

Ra is sufficient to define the magnitude of surface roughness, but is insufficient to define a surface entirely in that it only describes the average deviation from the mean line, not the nature of the peaks and valleys in a profile. To obtain an accurate surface description, parameters such as Rp, Rz and Rmr (tp) can be used to define the relative magnitude of the peaks and the spacing between them. These parameters are defined in Table 5-1, and their combination can identify if a surface is too rough or even too smooth for reciprocating applications. There are other parameters that can be considered for surface finish evaluation. For example, the limitation of Rt is that it considers only one measurement, while Rz, Rp and Rmr consider the full profile.

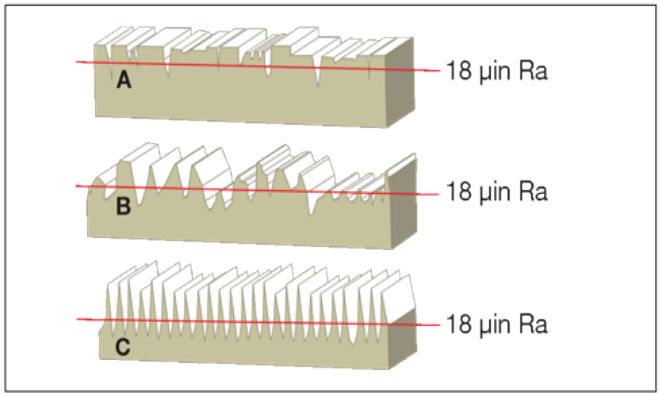

Figure 5.1 graphically represents Ra. The shaded area, which represents the average height of the profile, Ra, is equal to the area of the hatched portion.

The mean line, shown in red, splits the hatched area in half and forms the centre line for Ra. The graph also shows Rq, which is higher than Ra.

Figure 5.3 shows the actual surface profile of a polished chrome rod. Upon examination of the profile, it can be seen that the polishing operation has removed or rounded the peaks producing a positive effect on the characteristics of the sealing surface, as described below by Ra, Rp, Rz and Rmr.

- Ra = 8.9 µ in
- Rp = 14.8 µ in (which is 1.7 x Ra, less than the 3x guideline)
- Rz = 62.9 µ in (which is 7.1 x Ra, less than the 8x guideline)
- Rmr = 74%

Figure 5.3 also illustrates how Rp and Rz are calculated using the following equations:

$$Rp = \frac{Rp1 + Rp2 + Rp3 + Rp4 + Rp5}{5}$$

$$Rp = \frac{Rp1 + Rp2 + Rp3 + Rp4 + Rp5}{5}$$

Technical Parameters for Hydraulic Seals

NOTE: In the profile shown in Figure 5.3, Rt = Rz2 because the tallest peak and deepest valley occur in the same sampling length.

Figure 5.4 considers the same surface and illustrates how the Rmr value of 74% is determined. To accomplish this, locate the height of the curve at 5% material area (this is the reference line or “zero line”). From this height, move down a distance of 25% Rz and locate the new intersection point along the curve. This new intersection point is the actual Rmr value of 74%.

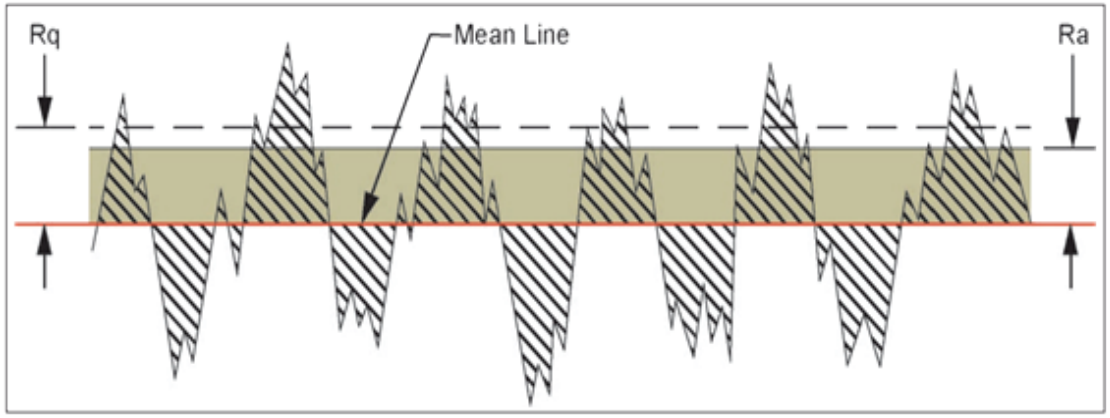

Fig 5.2

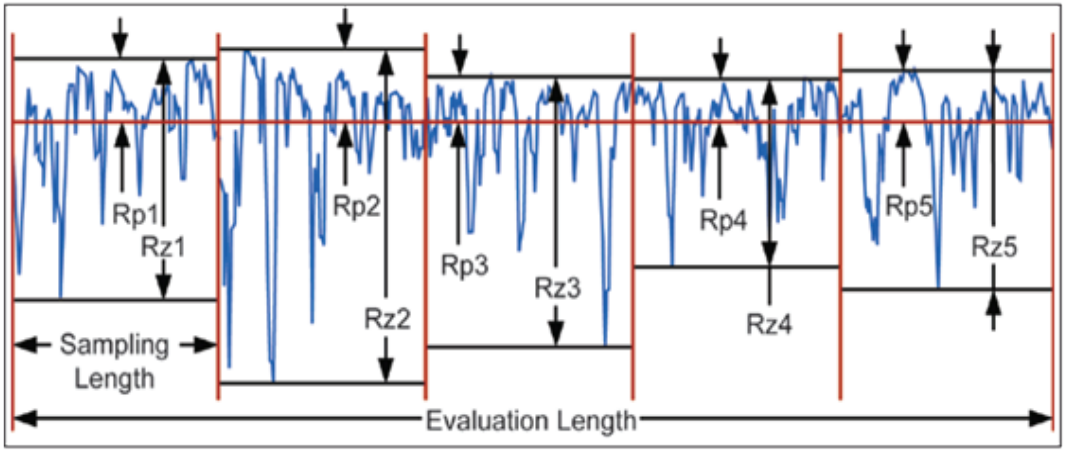

Fig 5.3

Technical Parameters for Hydraulic Seals

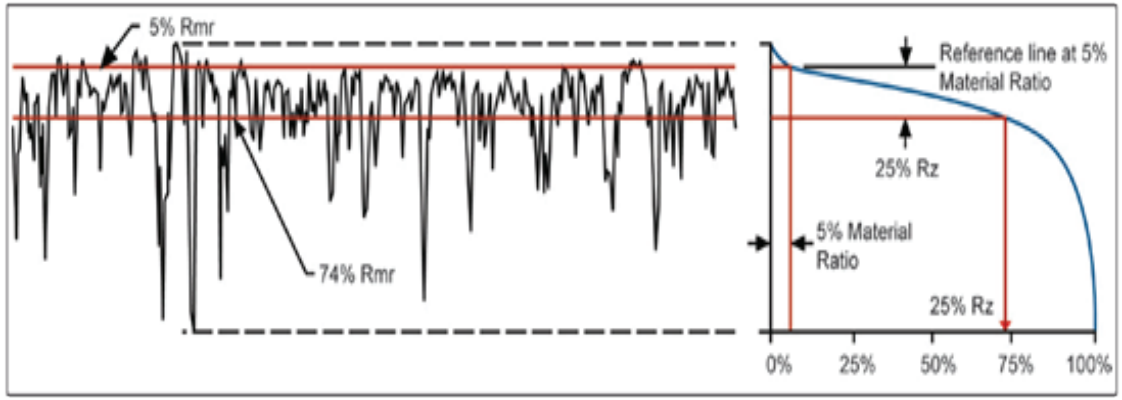

Fig 5.4

Parameter Descriptions

Roughness parameters are defined per ISO 4287:1997 and ISO 4288:1996.

Ra* – Arithmetic average or mean deviation from the centre line within a sampling length. Rq* – Root mean square deviation from the centre line within a sampling length.

Rp* – Maximum profile peak height within a sampling length. Also known as Rpm in ASME B46.1 – 2002.

Rv* – Maximum profile valley depth within a sampling length. Also known as Rvm in ASME B46.1 – 2002.

Rz* – Maximum height of profile within a sampling length (Rz = Rp + Rv).

Technical Parameters for Hydraulic Seals

NOTE: ISO 4287:1984, which measured five peaks and five valleys within a sampling length, is now obsolete. This value would be much lower because additional shorter peaks and valleys are measured. Over the years there have been several Rz definitions used. Care needs to be taken to identify which is used.

Rt – Maximum height of the profile within the evaluation length. An evaluation length is typically five sampling lengths.

Rmr – Relative material ratio measured at a given height relative to a reference zero line. Indicates the amount of surface contact area at this height.

Also known as tp (bearing length ratio) in ASME B46.1 – 2002.

Parameters are first defined over a sampling length. When multiple sampling lengths are measured, an average value is calculated, resulting in the final value of the parameter. The standard number of sampling lengths per ISO 4287:1997 and ISO 4288:1996 is five.

Surface Finish Guidelines for Reciprocating Seals Recommendations for surface roughness are different for static and dynamic surfaces. Static surfaces, such as seal groove diameters, are generally easier to seal and require less stringent roughness requirements; however, the type of fluid being sealed can affect the guidelines (see Table 5-1). It is important to remember that surface finish recommendations will vary depending upon the seal material of choice. PTFE seals require smoother finishes than seals made from polyurethane and most rubber compounds.

Four parameters have been selected to define a proper surface finish for hydraulic and pneumatic reciprocating applications. These parameters are Ra, Rp, Rz and Rmr. For descriptions of these parameters, please see Table 5.1.

Technical Parameters for Hydraulic Seals

Ra Guidelines				
Application	Thermoplastic and Rubber Seals		PTFE Seals	
	Dynamic Surfaces	Static Surfaces	Dynamic Surfaces	Static Surfaces
Cryogenics	–	–	4 µin (0.1 µm) maximum	8 µin (0.2 µm) maximum
Helium Gas Hydrogen Gas Freon	3 to 10 µin (0.08 to 0.25 µm)	12 µin (0.3 µm) maximum	6 µin (0.15 µm) maximum	12 µin (0.3 µm) maximum
Air Nitrogen Gas Argon Natural Gas Fuel (Aircraft and Automotive)	3 to 12 µin (0.08 to 0.3 µm)	16 µin (0.4 µm) maximum	8 µin (0.2 µm) maximum	16 µin (0.4 µm) maximum
Water Hydraulic Oil Crude Oil Sealants	3 to 12 µin (0.08 to 0.3 µm)	32 µin (0.8 µm) maximum	12 µin (0.3 µm) maximum	32 µin (0.8 µm) maximum

Rp Guidelines				
Application	Thermoplastic and Rubber Seals		PTFE Seals	
	Dynamic Surfaces	Static Surfaces	Dynamic Surfaces	Static Surfaces
All media/fluids	If Ra ≥ 5 µin (0.13 µm), then Rp ≤ 3 × Ra	–	If Ra ≥ 5 µin (0.13 µm), then Rp ≤ 3 × Ra	–
	If Ra < 5 µin (0.13 µm), then Rp ≤ 3.5 × Ra		If Ra < 5 µin (0.13 µm), then Rp ≤ 3.5 × Ra	
	Example: If Ra = 4 µin, then Rp ≤ 14 µin.			

Rz Guidelines				
Application	Thermoplastic and Rubber Seals		PTFE Seals	
	Dynamic Surfaces	Static Surfaces	Dynamic Surfaces	Static Surfaces
All media/fluids	Rz ≤ 8 × Ra and 70 µin (1.8 µm) maximum	Rz ≤ 6 × Ra	Rz ≤ 8 × Ra and 64 µin (1.6 µm) maximum	Rz ≤ 6 × Ra
	Example: If Ra = 4 µin, then Rz ≤ 32 µin (dynamic calculation)			
	Note: Rz values above maximum recommendations will increase seal wear rate.			

Rmr Guidelines				
Application	Thermoplastic and Rubber Seals		PTFE Seals	
	Dynamic Surfaces	Static Surfaces	Dynamic Surfaces	Static Surfaces
All media/fluids	45% to 70% (thermoplastic)	–	60% to 90%	–
	55% to 85% (rubber materials)			
	Rmr is measured at a depth of 25% of the Rz value based upon a reference level (zero line) at 5% material/bearing area.			

Table 5-1 Surface Finish Guidelines

Surface Roughness Table

METRIC SURFACE ROUGHNESS VALUES ARE INDICATED BY THE UNIT: MICROMETER (µm).

SYMBOLS: There are a number of symbols in use, all of which have a specific meaning. A symbol generally consists of 2 lines, one of which is longer than the other. The angle between the lines is 60 degrees.

Basic symbol (without top line) should not be used alone. Either the processing method or the surface roughness should be listed with it.

If written as per this example: it means machining optional. The surface roughness should be 3.2 µm (0.0032 mm)

Symbol (with top line) means: machining mandatory (surface roughness 3.2 µm).

Symbol (with circle in the vee) means: machining prohibited (surface roughness 3.2 µm).

The data in the right hand table is furnished only for practical information and to provide an idea of the achievable roughness R_a for different processing methods.

This data is primarily for metal surfaces. Other materials may show differences.

AVERAGE ACHIEVABLE ROUGHNESS | FINER | COARSER

Roughness values in micro-inches are 40 times the values in micrometers

General guidelines for feasible roughness R_a for different processing methods

Material removing or separating operations	roughness R_a in um: 0.012	0.025	0.05	0.1	0.2	0.4	0.8	1.6	3.2	6.3	13	25	50
flame cutting										■	■	■	■
sawing										■	■	■	■
planing									■	■	■	■	
punching								■	■	■	■		
chemical treatment								■	■	■	■	■	■
spark erosion machining								■	■	■	■	■	■
drilling								■	■	■	■	■	■
boring								■	■	■	■	■	■
milling								■	■	■	■	■	■
turning								■	■	■	■	■	■
broaching								■	■	■	■	■	■
reaming								■	■	■	■	■	■
filing								■	■	■	■	■	■
grinding							■	■	■	■	■	■	■
barreling							■	■	■	■	■	■	■
brushing							■	■	■	■	■	■	■
electrolytic grinding							■	■	■	■	■	■	■
honing							■	■	■	■	■	■	■
polishing							■	■	■	■	■	■	■
lapping							■	■	■	■	■	■	■
superfinishing							■	■	■	■	■	■	■
Non material removing operation													
sandcasting										■	■	■	■
hot rolling										■	■	■	■
die forging										■	■	■	■
gravity die casting									■	■	■	■	■
investment casting								■	■	■	■	■	■
extruding									■	■	■	■	■
cold rolling									■	■	■	■	■
die casting								■	■	■	■	■	■

R_a micrometer µm	R_a micro-inch µin	Roughness Grade Numbers (New)**	Roughness Grade Numbers (Old)***	R_t	(Ra)	Old Style	American standard
50	2000	N12	▽				
25	1000	N11					
12.5	500	N10					
6.3	250	N9	▽▽	32	6.3	32	250
3.2	125	N8		16	3.2		125
1.6	63	N7		8	1.6	8	63
0.8	32	N6	▽▽▽	4	0.8		32
0.4	16	N5		2	0.4	2	16
0.2	8	N4		1	0.2		8
0.1	4	N3	▽▽▽▽	0.5	0.1	0.5	4
0.05	2	N2		0.25	0.05	0.25	2
0.025	1	N1					

Notes: 1. Triangles, $\sqrt{R_z}$, or R_t on a drawing indicates peak to valley roughness measurements in micrometers (microns). (one micron = 0.001 mm)

2. $\sqrt{}$, R_a on a drawing indicates AVERAGE roughness rather than peak to valley values. (R_a is the unit of measurement in micrometers)

3. ▽ is the American standard per ASA B46.1. (average roughness in micro-inches)

**Use this symbology on drawings for international suppliers, and for new designs.

***Old surface roughness symbols which are still found on older metric drawings. They should not be used on new designs.

Examples of how the new system is used:

NEW N9 = 6.3, N6 = 0.8 OLD

In certain circumstances, it will be necessary to indicate the method of manufacturing:

Example: N7 precision ground

Technical Parameters for Hydraulic Seals

6. **Heat Treatment**

What is Heat Treatment?

Heat Treatment is a sequence of heating and cooling operations designed to get the desired combination of properties in metals and alloys in solid state. By heat treatment, it is possible not only to change the properties of steel but also possible to impart high mechanical properties suitable for sophisticated applications

Heat Treatment Properties

- Strength: It is the ability of the material to resist the action of external loads of forces. This is the properties which prevent the tool from breaking under the cutting force. Three types of strength:
  - Tensile Strength: - It is the maximum tensile load per unit area that the material can withstand without failure
  - Compressive Strength: - It is the maximum compressive load that the material can withstand without failure.
  - Shear Strength: - It is the maximum shear load that the material can withstand without failure
- Plasticity: It is the ability of the material to deform without breaking. The material will deform under a load before it rupture.
- Malleability: - The plastic flow of a material under compressive force is known as malleability. It is the property that allows the material to be rolled in to thin sheets.
- Ductility: - It is the property that allows the material to be drawn in to a small diameter wire. Elasticity: - It is the ability of the material to recover its original shape and size after it has been deformed under a load.
- Stiffness: - It is the ability of a material to resist deformation.
- Brittleness: - It is the property of a material to break without deformation.
- Toughness: - It is the property of the material that enables it to absorb energy and deform plastically before failure.
- Hardness: - It is the ability of the material to resist penetration, scratching, abrasion or indentation
- Machinability: - It is the property of a material to lend itself readily for machining with ordinary cutting tool
- Fatigue: - It is the failure of a material when subjected to many repeated stresses that are far below their ultimate tensile or compressive strength.
- Creep: - It can be defined as the slow and progressive deformation of a material with time under constant stress.

Technical Parameters for Hydraulic Seals

a. Heat Treatment Micro Constituents of Steel

Ferrite: - It is a pure iron containing only 0.06% of carbon. Ferrite is strongly magnetic at room temperature and becomes paramagnetic at 770ºC

Cementite: - It is a compound of iron and carbon. It is extremely hard and brittle. It contains 93.33% iron and 6.67% carbon. It is magnetic at room temperature and become paramagnetic at 210ºC. It is also called Iron-carbide.

Pearlite: - It is an intimate mixture of Ferrite and Cementite and made up of alternate layers of Ferrite and Cementite. Pearlite contains 88.5% Ferrite and 11.5% of Cementite. Pearlite exists at 723ºC only.

Austenite: - It is a solid solution of carbon in iron. It can dissolve up to 2% of carbon at 1148ºC. It is soft and ductile but stronger and less ductile than Pearlite. It is a non-magnetic and exists at temperature above 727ºC.

Ledeburite: - Similar to Pearlite, it consists of mixture of two phases, Austenite and Cementite and it exists between 1148ºC and 727ºC.

Martensite: - It is a micro constituent of steel, which is obtained when steel is cooled rapidly from Austenite phase to room temperature. It represents a needle like appearance under microscope and very hard and brittle.

Bainite: - It forms when steel is cooled rapidly from Austenite phase to a temperature of 6500C to 5000C and held at that temperature for a long time. It is an intimate mixture of Ferrite and Cementite and appears in the form of tiny globules.

Troostite: - When alloy steels are tempered, Martensite structure decomposes and a new structure called Troostite is formed. It has half hardness of Martensite.

Sorbite: - When hardened steel is tempered at a temperature between 450ºC to 650ºC, the Martensite structure gets softened and resulting structure is called Sorbite.

Technical Parameters for Hydraulic Seals

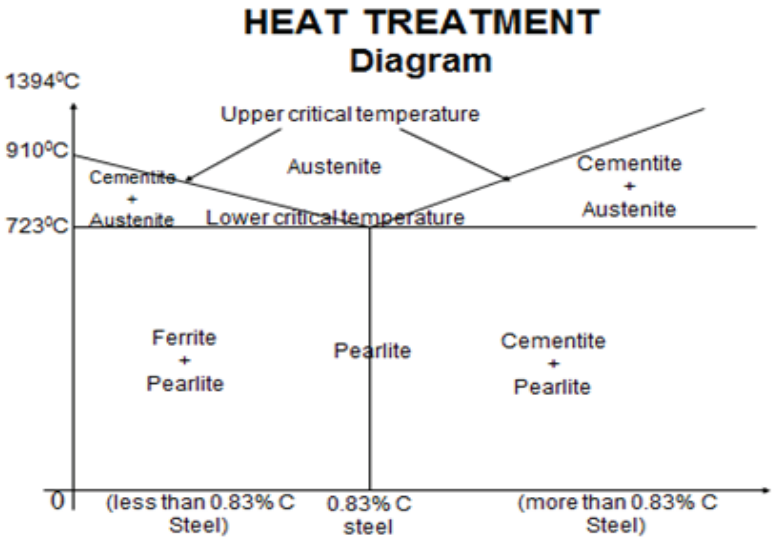

Fig: Iron Carbon Phase diagram

Material Parameters

1. Introduction:

The correct seal material is very important to give excellent sealing ability and a long life. There are two basic considerations in specifying a well-designed sealing system, both of which are equally integral to system performance i.e. Seal configuration, and Material, when selecting the material there are a number of considerations to be made:

- Typical Physical Properties give a broad picture of a material's performance.
- Chemical Compatibility matches the sealing material with the system fluid and operating environment.
- Thermal Capabilities and Extrusion Resistance define limits of application parameters.
- Friction and Wear help to determine the performance and life of the seal package.
- Storage, Handling and Installation guidelines ensure seal integrity for optimal performance.

Temperature Limits:

When selecting a seal material, temperature is a key factor. Heat affects the seal material in several ways:

- Softens the material which accelerates wear
- Accelerates any chemical reaction between the fluid and the seal Damages the bond structure of the material
- Increases compression set
- Higher temperatures for extended periods of time may harden thermoset (rubber) materials Lower end temperature may be as important as the upper end temperature. This is especially true in mobile hydraulics. As the temperature lowers, the following takes place:
- The seal hardens and becomes less responsive.
- The coefficient of thermal expansion and contraction is more comparing to metals. Therefore the seal lips could start to pull away from the mating surface. This loss of lip compression against the colder sealing surfaces can be offset by seal design and proper material selection.

Material Parameters

2. TRIADA® Compound Classifications

TRIALON® The thermoplastic polymer based on Tetrafluoroethylene. The list of materials is shown in the Table 3.4a. This materials is not elastic as rubber, but has outstanding properties and characteristics:

- Excellent chemical resistance to almost all commercial fluids and chemicals
- Low co-efficient of friction, self-lubricating
- Good electrical insulating properties
- Good mechanical resistance if formulated with glass, bronze and carbon
- Excellent temperature resistance between -200ºC to +260ºC

TRIAFLEX® The compounds based on Rubber, The list of materials is shown in the Table 3.4b. the properties of some of the rubber compounds has been mentioned below:

- NBR (Butadiene-Acrylonitrile copolymer) has excellent resistance to mineral oils, and

exhibits good compression strength

- EPDM (Ethylene Propylene polymer) has excellent resistance to Steam, Ozone, Water, Non mineral based brake fluids including phosphate esters, not compatible with mineral oils
- FKM (Fluor elastomer) has a good resistance to aromatic fuels, concentrated acids and prolonged exposure to high temperature

TRIATHANE® The material based on Polyester or Polyether, The list of materials is shown in the

Table 3.4c. This materials has high properties & qualities like:

- High tensile strength and very good resistance to abrasion
- Good compatibility with mineral oils and good resistance to Ozone and weathering
- Good compression set values and good resistance to laceration

.

Material Parameters

TRIAMIDE® The material such as Nylon, PA and PEEK, sometimes called hard plastics, are generally categorized as compounds with hardness measured on the Rockwell scale. These compounds exhibit high tensile and compressive strength and are typically used in wear rings for bearing support and in auxiliary devices for extrusion resistance.

The list of materials is shown in the Table 3.4d.

TRIATEX® The materials based on Polyester fabric phenolic resin Wear Rings, with MOS2 impregnation, available in length of 10mtrs or more, thereby reducing the wastage. Can be easily cut into required sizes and flexible compared to Cotton Fabric or Synthetic Fabric Wear Rings. Linear Speeds can go up to 1m/s.

The list of materials is shown in the Table 3.4e.

Note: We emphasize to use the below tables as guide only.

TRIADA® offers unique material blend and a variety of material filler combinations and colors to enhance the performance of the seal in the most extreme application needs. For guidance on selection of material for extreme conditions please contact TRIADA® application department.

TRIAMIDE		
Sl. No.	**Material Code**	**Compound**
1	T483	Nyla Tron
2	T484	Poly Amide
3	T485	POM
4	T486	Glass Filled PA
5	T487	PA + PTFE
6	T489	PEEK

TRIAMIDE® list of materials Table 3.4d

TRIATEX		
Sl. No.	**Material Code**	**Compound**
1	T431	Cotton Fabric Reinforced Phenolic Resin
2	T432	Synthetic Fabric Reinforced Phenolic Resin
3	T433	Polyester Fabric + Phenolic Resin + PTFE + Additives
4	T434	Polyester Fabric + Polyester Resin + PTFE
5	T435	Polyester Fabric + Polyester Resin + MoS2 / PTFE

TRIATEX® list of materials Table 3.4e

Material Parameters

TRIAFLEX		
Sl. No.	Material Code	Compound
1	T561	NBR 60 Shores for V-Rings
2	T591	NBR 90 Shores
3	T592	NBR with Peroxide
4	T596	NBR 90 Shores for Oil Seals
5	T599	NBR 90 Shores low temperature (-48 deg.)
6	T536	HNBR 90 Shores
7	T537	HNBR 70 Shores for Oil Seals
8	T541	Chloroprene 65 shores
9	T543	NBR with fabric reinforced
10	T671	FKM 70 Sh. for O-Ring
11	T621	FFKM
12	T771	EPDM 70 shores
13	T801	Silicon

TRIAFLEX® list of materials Table 3.4b

TRIATHANE		
Sl. No.	Material Code	Compound
1	T461	Virgin PU 90 Shores
2	T462	PU 90 Shores
3	T470	Polyester with high compressive strength
4	T471	Compounded Poly-Uurethane Polyester
5	T472	Low temperature Poly-Urethane
6	T473	Compounded Poly-Urethane Polyester
7	T474	Compounded Poly-Urethane Polyester
8	T475	Compounded Poly-Urethane Polyester
9	T476	Hydrolysis resistant Poly-Urethane
10	T477	Self-Lubricating Poly-Ether
11	T478	Compounded Poly-Urethane Polyester
12	T479	Poly-Urethane (Ether)
13	T491	Poly-Urethane 90Shores for O-Ring

TRIATHANE® list of materials Table 3.4c

Material Parameters

TRIALON		
Sl. No.	**Material Code**	**Compound**
1	T414S/ T414R	Bronze filled PTFE (Low Fill)
2	T416S/ T416R	Carbon filled PTFE (Low Fill)
3	T426	Carbon fibre filled PTFE Acid treated
4	T415	Bronze filled PTFE for Piston and Rod Seals (High Fill)
5	T411	Bronze filled PTFE for Piston, Rod Seals and Wearrings (High Fill with additives)
5	T417	Carbon filled PTFE
6	T412	Glass filled PTFE
7	T401	Virgin PTFE
8	T402	Virgin PTFE + MoS2
9	T413	Graphite filled PTFE
10	T418	UHMWPE (Off-White Color)
11	T419	VIRGIN PTFE with color impregnation (Blue)
12	T465	Flexible Graphite with Inconel

TRIALON® list of materials Table 3.4a

TRIADA
TECHNOLOGIES

Piston Seals
Triada Sealing Guide

#SealingExcellence

TRIADA

Important Information

Utmost care has been taken in the preparation and completion of this guide, but still it is not guaranteed that this is devoid of any typographical or inadvertent errors or omissions. Hence, Triada shall not be responsible for the end user's reliance on such errors or omissions. Information or data in this guide which includes and not limited to product profiles, product features, specifications etc. may be amended or modified at the sole discretion of Triada Technologies India Pvt. Ltd. (TTIPL) without any notice or prior intimation.

TTIPL strongly urge its customers and associates to validate the products that are being offered, to ensure its suitability and performance, based on their applications, hardware & operating conditions, through their own analysis and testing.

DOC. NO.: TT/AE/CAT/FE/03-2023

Table of Content

1 Introduction to Piston Seals


01 PTD A01 - A14


02 PSS A15 - A27


03 PQD A29 - A39


04 PQE A41 - A48


05 PED A49 - A57


06 PES A59 - A66


07 PCT A67 - A71


08 PCB A73 - A84


09 PBM A85 - A97


10 PSP A99 - A105


11 PTC A107 - A112


12 PHC A113 - A117


13 PHC3 A119 - A122


14 PSM A123 - A131


15 PUA A133 - A148


16 PPS A149 - A188


17 PPK A189 - A195


18 PSK A197 - A202


19 PGK A203 - A208


20 PAB A209 - A233


21 PPC A235 - A240


22 PWS A241 - A250


23 PTS A251 - A257

Introduction to Piston Seals

Piston Seals

Piston Seals plays a vital role in a Cylinder Sealing System as its performance has a major say in developing the force within the system. Even a slight leakage across the Piston Seal adversely affects the performance of the overall Cylinder.

Even though the purpose of a Piston Seal is the same across any Linear Actuators, still a wide variety of Seal profiles are available, so as to meet the exact requirements of the Cylinder, considering the Criticality, Cost, Expected Life, Power Consumption, Design limitations etc.Normally these Seals are categorized into Light Duty, Medium Duty and Heavy Duty considering the severity of the application. The Light Duty Seals normally face system pressure upto about 210 bar, whereas the Medium Duty Cylinders could see pressures upto about 400bar. Most of the applications falls within this pressure ranges, but as technology improves, the demand for limiting or reducing the size and weight of the Actuators also gains momentum, which means that for the same force generation, a higher pressure need to be applied. To address this requirement, the new generation seals or rather a high end Piston Seal group is in place, which can withstand pressures upto 800bar or sometimes even higher than this.

One of the main limitations to apply higher pressures in a Cylinder is the capability of the sealing material to resist extrusion. This is achieved either by using innovative materials or by using innovative designs of the seals. Of course, the other way around is to reduce the extrusion gaps or rather adjusts the fit between the Cylinder and Piston, which is a costly proposition.

Triada® offers a comprehensive range of Piston Seals, suiting to each and every application that one may encounter. It is needless to mention that our Customers have a 24 x 7 access to the Application Engineering Team at Triada®, who shall propose the right Sealing System for their application. While we have listed mostly the standard profiles, it is also worth mentioning that Triada® can design and develop Custom made Seals, for any non-standard hardware size also or for that matter to meet any other requirements that doesn't fall under the standard or normal characteristics of the Seals.

Piston Seals

PTD

TRIADA
TECHNOLOGIES

#SealingExcellence




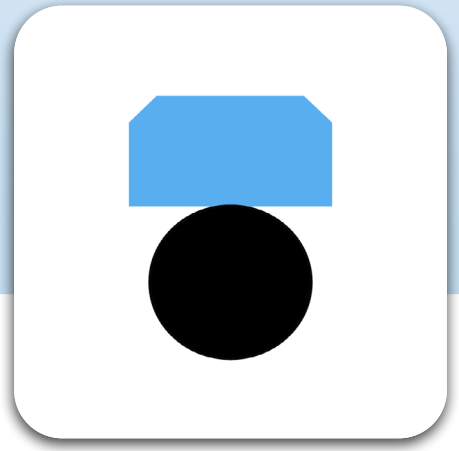

Description

The TRIGLIDE® is a bidirectional seal and composed of two elements. The dynamic seal is a ring in TRIALON® (filled PTFE) while the static seal is an O-Ring in TRIAFLEX® (NBR) also acting as energizer. Depending on the application, media, cycle speed etc., the PTFE compound is selected and the O-Ring compound is selected considering the media compatibility, temperature etc.

Diameter Range	Ø8.00 – Ø2700.00 (Larger diameters on request)
Standard material	TRIALON® T415 (Bronze Filled PTFE) with Energiser in TRIAFLEX® T571 (NBR 70 Shores) (Other Compounds available, so as to suit the Application Conditions).
Temperature(°C)	-40ºC to 200ºC (Based on Elastomer Material).
Speed	≤ 15.0 m/s
Fluids	Hydraulic fluids (Mineral Oil based), Water, Air etc, depending on Seal Compounds selected.
Pressure	≤ 800 bar

Reciprocating | Oscillating | Rotary | Helix | Static | Single Acting | Double Acting

Material Details

Seal Material	Seal Material Code	O-Ring Material	O-Ring Material / Code
TRIALON® Bronze Filled PTFE	T415	TRIAFLEX® NBR 70	N (T571)
TRIALON® Carbon Filled PTFE	T417	TRIAFLEX® FKM 75	F (T675)
		TRIAFLEX® EPDM 70	E (T771)
		TRIAFLEX® HNBR 70	H (T531)

Nomenclature

Part No	PTD	1000	0845	063	T415	N
	Seal profile	Bore Dia x 10	Groove Dia x 10	Groove Width x 10	Seal Material Code	O-Ring Material Code

Groove Details

Bore Diameter "A" H9			Radial Clearance "E" max		Radius "Z"	O-Ring Cross Section
Heavy duty Searies	Standard Series	Light Duty Series	0-200 bar	200-400 bar		
-	8.00 – 14.90	15.00 – 39.90	0.30 - 0.20	0.20 - 0.15	0.30 - 0.50	1.78
-	15.00 – 39.90	40.00 – 79.90	0.40 - 0.25	0.25 - 0.15	0.50 - 0.80	2.62
15.00 – 39.90	40.00 – 79.90	80.00 – 132.90	0.40 - 0.25	0.25 - 0.15	0.80 - 1.20	3.53
40.00 – 79.90	80.00 –132.90	133.00 – 329.90	0.50 - 0.30	0.30 - 0.20	1.20 - 1.50	5.33
80.00 – 132.90	133.00 – 329.90	330.00 – 669.90	0.50 - 0.30	0.30 - 0.20	1.50 - 2.00	7.00
133.00 – 329.90	330.00 – 669.90	670.00 – 999.90	0.60 - 0.35	0.35 - 0.25	1.50 - 2.00	7.00
330.00 – 669.90	670.00 – 999.90	-	0.70 - 0.40	0.40 - 0.30	2.00 - 3.00	8.40

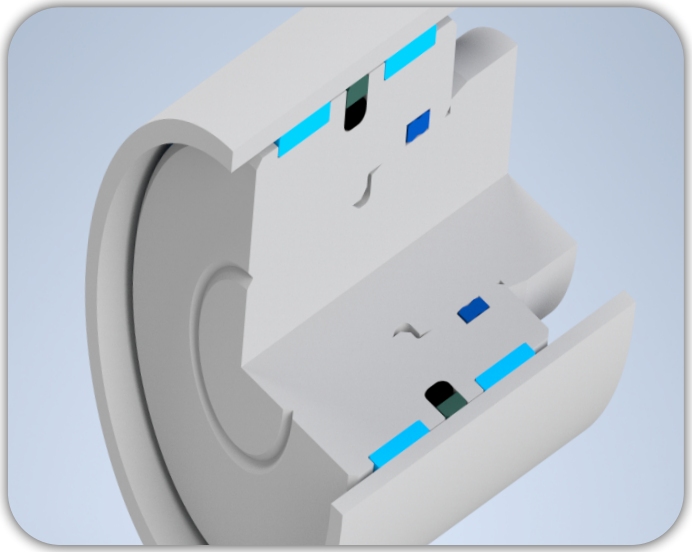

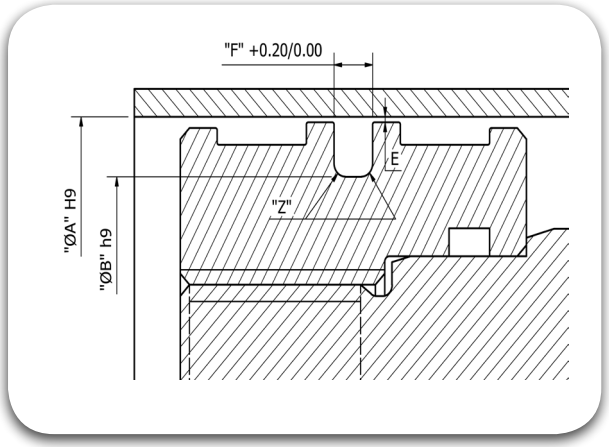

8.00

Part No	PTD 0080 0031 022						
Groove Dimension	ØA	x	ØB	x	F		
	8.00		3.10		2.20		
O-Ring Size	ID	2.90	x	C/S	1.78		

10.00

Part No	PTD 0100 0051 022						
Groove Dimension	ØA	x	ØB	x	F		
	10.00		5.10		2.20		
O-Ring Size	ID	5.28	x	C/S	1.78		

12.00

Part No	PTD 0120 0071 022						
Groove Dimension	ØA	x	ØB	x	F		
	12.00		7.10		2.20		
O-Ring Size	ID	7.65	x	C/S	1.78		

15.00

Part No	PTD 0150 0075 032						
Groove Dimension	ØA	x	ØB	x	F		
	15.00		7.50		3.20		
O-Ring Size	ID	7.59	x	C/S	2.62		

16.00

Part No	PTD 0160 0085 032						
Groove Dimension	ØA	x	ØB	x	F		
	16.00		8.50		3.20		
O-Ring Size	ID	7.59	x	C/S	2.62		

18.00

Part No	PTD 0180 0105 032						
Groove Dimension	ØA	x	ØB	x	F		
	18.00		10.50		3.20		
O-Ring Size	ID	10.77	x	C/S	2.62		

20.00

Part No	PTD 0200 0125 032						
Groove Dimension	ØA	x	ØB	x	F		
	20.00		12.50		3.20		
O-Ring Size	ID	12.37	x	C/S	2.62		

22.00

Part No	PTD 0220 0145 032						
Groove Dimension	ØA	x	ØB	x	F		
	22.00		14.50		3.20		
O-Ring Size	ID	13.94	x	C/S	2.62		

24.00

Part No	PTD 0240 0165 032						
Groove Dimension	ØA	x	ØB	x	F		
	24.00		16.50		3.20		
O-Ring Size	ID	15.54	x	C/S	2.62		

25.00

Part No	PTD 0250 0175 032						
Groove Dimension	ØA	x	ØB	x	F		
	25.00		17.50		3.20		
O-Ring Size	ID	17.12	x	C/S	2.62		

25.40

Part No	PTD 0254 0179 032						
Groove Dimension	ØA	x	ØB	x	F		
	25.40		17.90		3.20		
O-Ring Size	ID	17.12	x	C/S	2.62		

28.00

Part No	PTD 0280 0205 032						
Groove Dimension	ØA	x	ØB	x	F		
	28.00		20.50		3.20		
O-Ring Size	ID	20.29	x	C/S	2.62		

28.50

Part No	PTD 0285 0210 032						
Groove Dimension	ØA	x	ØB	x	F		
	28.50		21.00		3.20		
O-Ring Size	ID	20.29	x	C/S	2.62		

30.00

Part No	PTD 0300 0225 032				
Groove Dimension	ØA 30.00	x	ØB 22.50	x	F 3.20
O-Ring Size	ID 21.89	x	C/S 2.62		

31.70

Part No	PTD 0317 0242 032				
Groove Dimension	ØA 31.70	x	ØB 24.20	x	F 3.20
O-Ring Size	ID 23.47	x	C/S 2.62		

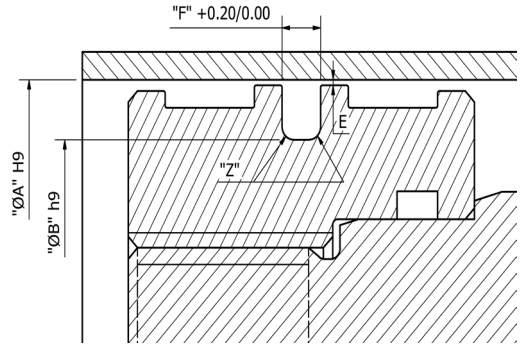

32.00

Part No	PTD 0320 0245 032				
Groove Dimension	ØA 32.00	x	ØB 24.50	x	F 3.20
O-Ring Size	ID 23.47	x	C/S 2.62		

35.00

Part No	PTD 0350 0275 032				
Groove Dimension	ØA 35.00	x	ØB 27.50	x	F 3.20
O-Ring Size	ID 26.64	x	C/S 2.26		

36.00

Part No	PTD 0360 0285 032				
Groove Dimension	ØA 36.00	x	ØB 28.50	x	F 3.20
O-Ring Size	ID 28.24	x	C/S 2.62		

38.00

Part No	PTD 0380 0305 032				
Groove Dimension	ØA 38.00	x	ØB 30.50	x	F 3.20
O-Ring Size	ID 29.82	x	C/S 2.62		

39.00

Part No	PTD 0390 0315 032				
Groove Dimension	ØA 39.00	x	ØB 31.50	x	F 3.20
O-Ring Size	ID 31.42	x	C/S 2.62		

40.00

Part No	PTD 0400 0290 042				
Groove Dimension	ØA 40.00	x	ØB 29.00	x	F 4.20
O-Ring Size	ID 28.17	x	C/S 3.53		

42.00

Part No	PTD 0420 0310 042				
Groove Dimension	ØA 42.00	x	ØB 31.00	x	F 4.20
O-Ring Size	ID 29.74	x	C/S 3.53		

44.50

Part No	PTD 0445 0335 042				
Groove Dimension	ØA 44.50	x	ØB 33.50	x	F 4.20
O-Ring Size	ID 32.92	x	C/S 3.53		

45.00

Part No	PTD 0450 0340 042				
Groove Dimension	ØA 45.00	x	ØB 34.00	x	F 4.20
O-Ring Size	ID 32.92	x	C/S 3.53		

48.00

Part No	PTD 0480 0370 042				
Groove Dimension	ØA 48.00	x	ØB 37.00	x	F 4.20
O-Ring Size	ID 36.09	x	C/S 3.53		

50.00

Part No	PTD 0500 0390 042				
Groove Dimension	ØA 50.00	x	ØB 39.00	x	F 4.20
O-Ring Size	ID 37.69	x	C/S 3.53		

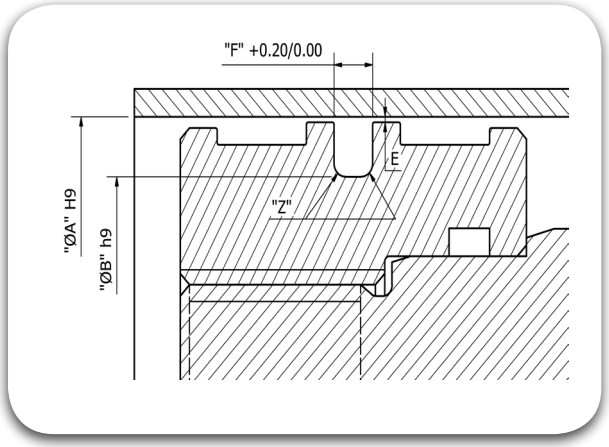

50.80

Part No	PTD 0508 0398 042					
Groove Dimension	ØA	x	ØB	x	F	
	50.80		39.80		4.20	
O-Ring Size	ID	37.69	x	C/S	3.53	

52.00

Part No	PTD 0520 0410 042					
Groove Dimension	ØA	x	ØB	x	F	
	52.00		41.00		4.20	
O-Ring Size	ID	40.87	x	C/S	3.53	

55.00

Part No	PTD 0550 0440 042					
Groove Dimension	ØA	x	ØB	x	F	
	55.00		44.00		4.20	
O-Ring Size	ID	44.04	x	C/S	3.53	

57.10

Part No	PTD 0571 0461 042					
Groove Dimension	ØA	x	ØB	x	F	
	57.10		46.10		4.20	
O-Ring Size	ID	44.04	x	C/S	3.53	

60.00

Part No	PTD 0600 0490 042					
Groove Dimension	ØA	x	ØB	x	F	
	60.00		49.00		4.20	
O-Ring Size	ID	47.22	x	C/S	3.53	

63.00

Part No	PTD 0630 0520 042					
Groove Dimension	ØA	x	ØB	x	F	
	63.00		52.00		4.20	
O-Ring Size	ID	50.39	x	C/S	3.53	

63.50

Part No	PTD 0635 0525 042					
Groove Dimension	ØA	x	ØB	x	F	
	63.50		52.50		4.20	
O-Ring Size	ID	50.39	x	C/S	3.53	

64.00

Part No	PTD 0640 0530 042					
Groove Dimension	ØA	x	ØB	x	F	
	64.00		53.00		4.20	
O-Ring Size	ID	50.39	x	C/S	3.53	

65.00

Part No	PTD 0650 0540 042					
Groove Dimension	ØA	x	ØB	x	F	
	65.00		54.00		4.20	
O-Ring Size	ID	53.57	x	C/S	3.53	

69.80

Part No	PTD 0698 0588 042					
Groove Dimension	ØA	x	ØB	x	F	
	69.80		58.80		4.20	
O-Ring Size	ID	56.74	x	C/S	3.53	

70.00

Part No	PTD 0700 0590 042					
Groove Dimension	ØA	x	ØB	x	F	
	70.00		59.00		4.20	
O-Ring Size	ID	56.74	x	C/S	3.53	

70.00

Part No	PTD 0700 0545 063					
Groove Dimension	ØA	x	ØB	x	F	
	70.00		54.50		6.30	
O-Ring Size	ID	53.34	x	C/S	5.33	

75.00

Part No	PTD 0750 0640 042					
Groove Dimension	ØA	x	ØB	x	F	
	75.00		64.00		4.20	
O-Ring Size	ID	63.09	x	C/S	3.53	

76.20

Part No	PTD 0762 0652 042						
Groove Dimension	ØA	x	ØB	x	F		
	76.20		65.20		4.20		
O-Ring Size	ID	63.09	x	C/S	3.53		

80.00

Part No	PTD 0800 0645 063						
Groove Dimension	ØA	x	ØB	x	F		
	80.00		64.50		6.30		
O-Ring Size	ID	62.87	x	C/S	5.33		

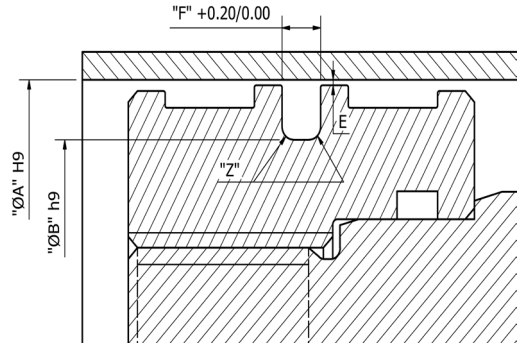

80.00

Part No	PTD 0800 0590 081						
Groove Dimension	ØA	x	ØB	x	F		
	80.00		59.00		8.10		
O-Ring Size	ID	58.00	x	C/S	7.00		

82.50

Part No	PTD 0825 0670 063						
Groove Dimension	ØA	x	ØB	x	F		
	82.50		67.00		6.30		
O-Ring Size	ID	66.04	x	C/S	5.33		

85.00

Part No	PTD 0850 0695 063						
Groove Dimension	ØA	x	ØB	x	F		
	85.00		69.50		6.30		
O-Ring Size	ID	69.22	x	C/S	5.33		

85.00

Part No	PTD 0850 0640 081						
Groove Dimension	ØA	x	ØB	x	F		
	85.00		64.00		8.10		
O-Ring Size	ID	64.00	x	C/S	7.00		

89.00

Part No	PTD 0890 0735 063						
Groove Dimension	ØA	x	ØB	x	F		
	89.00		73.50		6.30		
O-Ring Size	ID	72.39	x	C/S	5.33		

90.00

Part No	PTD 0900 0745 063						
Groove Dimension	ØA	x	ØB	x	F		
	90.00		74.50		6.30		
O-Ring Size	ID	72.39	x	C/S	5.33		

90.00

Part No	PTD 0900 0690 081						
Groove Dimension	ØA	x	ØB	x	F		
	90.00		69.00		8.10		
O-Ring Size	ID	68.00	x	C/S	7.00		

95.00

Part No	PTD 0950 0795 063						
Groove Dimension	ØA	x	ØB	x	F		
	95.00		79.50		6.30		
O-Ring Size	ID	78.74	x	C/S	5.33		

95.00

Part No	PTD 0950 0740 081						
Groove Dimension	ØA	x	ØB	x	F		
	95.00		74.00		8.10		
O-Ring Size	ID	73.00	x	C/S	7.00		

100.00

Part No	PTD 1000 0845 063						
Groove Dimension	ØA	x	ØB	x	F		
	100.00		84.50		6.30		
O-Ring Size	ID	81.92	x	C/S	5.33		

100.00

Part No	PTD 1000 0790 081						
Groove Dimension	ØA	x	ØB	x	F		
	100.00		79.00		8.10		
O-Ring Size	ID	79.00	x	C/S	7.00		

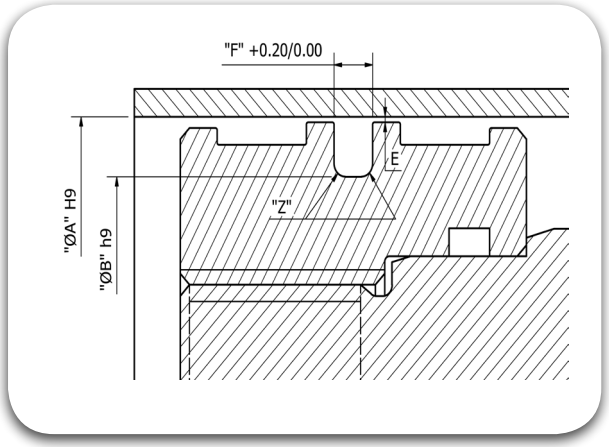

101.60

Part No	PTD 1016 0861 063				
Groove Dimension	ØA	x	ØB	x	F
	101.60		86.10		6.30
O-Ring Size	ID	85.09	x	C/S	5.33

105.00

Part No	PTD 1050 0895 063				
Groove Dimension	ØA	x	ØB	x	F
	105.00		89.50		6.30
O-Ring Size	ID	88.27	x	C/S	5.33

105.00

Part No	PTD 1050 0840 081				
Groove Dimension	ØA	x	ØB	x	F
	105.00		84.00		8.10
O-Ring Size	ID	83.00	x	C/S	7.00

110.00

Part No	PTD 1100 0945 063				
Groove Dimension	ØA	x	ØB	x	F
	110.00		94.50		6.30
O-Ring Size	ID	94.62	x	C/S	5.33

110.00

Part No	PTD 1100 0890 081				
Groove Dimension	ØA	x	ØB	x	F
	110.00		89.00		8.10
O-Ring Size	ID	89.00	x	C/S	7.00

114.30

Part No	PTD 1143 0988 063				
Groove Dimension	ØA	x	ØB	x	F
	114.30		98.80		6.30
O-Ring Size	ID	97.79	x	C/S	5.33

115.00

Part No	PTD 1150 0995 063				
Groove Dimension	ØA	x	ØB	x	F
	115.00		99.50		6.30
O-Ring Size	ID	97.79	x	C/S	5.33

115.00

Part No	PTD 1150 0940 081				
Groove Dimension	ØA	x	ØB	x	F
	115.00		94.00		8.10
O-Ring Size	ID	94.00	x	C/S	7.00

120.00

Part No	PTD 1200 1045 063				
Groove Dimension	ØA	x	ØB	x	F
	120.00		104.50		6.30
O-Ring Size	ID	104.14	x	C/S	5.33

120.00

Part No	PTD 1200 0990 081				
Groove Dimension	ØA	x	ØB	x	F
	120.00		99.00		8.10
O-Ring Size	ID	99.00	x	C/S	7.00

125.00

Part No	PTD 1250 1095 063				
Groove Dimension	ØA	x	ØB	x	F
	125.00		109.50		6.30
O-Ring Size	ID	107.32	x	C/S	5.33

125.00

Part No	PTD 1250 1040 081				
Groove Dimension	ØA	x	ØB	x	F
	125.00		104.00		8.10
O-Ring Size	ID	101.00	x	C/S	7.00

127.00

Part No	PTD 1270 1115 063				
Groove Dimension	ØA	x	ØB	x	F
	127.00		111.50		6.30
O-Ring Size	ID	110.49	x	C/S	5.33

130.00

Part No	PTD 1300 1145 063
Groove Dimension	ØA 130.00 x ØB 114.50 x F 6.30
O-Ring Size	ID 113.67 x C/S 5.33

130.00

Part No	PTD 1300 1090 081
Groove Dimension	ØA 130.00 x ØB 109.00 x F 8.10
O-Ring Size	ID 106.00 x C/S 7.00

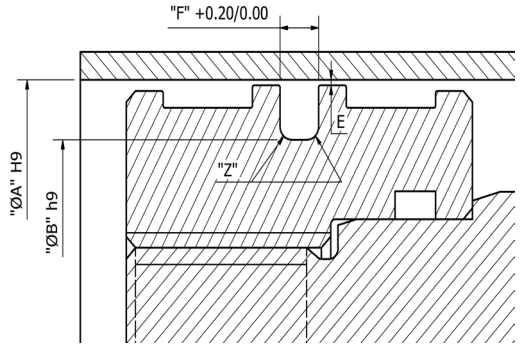

132.00

Part No	PTD 1320 1165 063
Groove Dimension	ØA 132.00 x ØB 116.50 x F 6.30
O-Ring Size	ID 116.84 x C/S 5.33

133.00

Part No	PTD 1330 1120 081
Groove Dimension	ØA 133.00 x ØB 112.00 x F 8.10
O-Ring Size	ID 113.67 x C/S 7.00

135.00

Part No	PTD 1350 1140 081
Groove Dimension	ØA 135.00 x ØB 114.00 x F 8.10
O-Ring Size	ID 113.67 x C/S 7.00

140.00

Part No	PTD 1400 1190 081
Groove Dimension	ØA 140.00 x ØB 119.00 x F 8.10
O-Ring Size	ID 116.84 x C/S 7.00

145.00

Part No	PTD 1450 1240 081
Groove Dimension	ØA 145.00 x ØB 124.00 x F 8.10
O-Ring Size	ID 123.19 x C/S 7.00

150.00

Part No	PTD 1500 1290 081
Groove Dimension	ØA 150.00 x ØB 129.00 x F 8.10
O-Ring Size	ID 129.54 x C/S 7.00

154.00

Part No	PTD 1540 1330 081
Groove Dimension	ØA 154.00 x ØB 133.00 x F 8.10
O-Ring Size	ID 132.72 x C/S 7.00

155.00

Part No	PTD 1550 1340 081
Groove Dimension	ØA 155.00 x ØB 134.00 x F 8.10
O-Ring Size	ID 132.72 x C/S 7.00

160.00

Part No	PTD 1600 1390 081
Groove Dimension	ØA 160.00 x ØB 139.00 x F 8.10
O-Ring Size	ID 139.07 x C/S 7.00

165.00

Part No	PTD 1650 1440 081
Groove Dimension	ØA 165.00 x ØB 144.00 x F 8.10
O-Ring Size	ID 142.24 x C/S 7.00

170.00

Part No	PTD 1700 1490 081
Groove Dimension	ØA 170.00 x ØB 149.00 x F 8.10
O-Ring Size	ID 148.59 x C/S 7.00

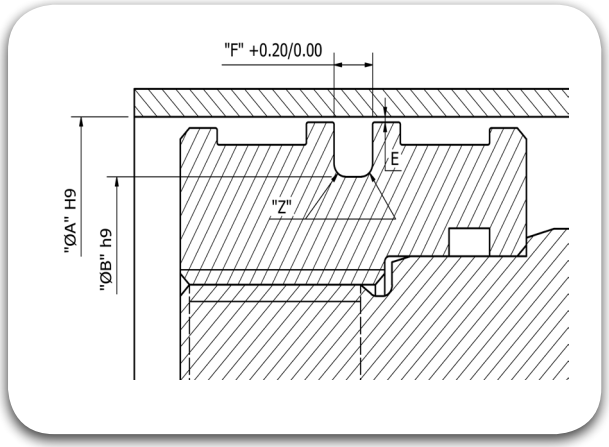

175.00

Part No	PTD 1750 1540 081				
Groove Dimension	ØA	x	ØB	x	F
	175.00		154.00		8.10
O-Ring Size	ID 151.77	x	C/S 7.00		

180.00

Part No	PTD 1800 1590 081				
Groove Dimension	ØA	x	ØB	x	F
	180.00		159.00		8.10
O-Ring Size	ID 158.12	x	C/S 7.00		

190.00

Part No	PTD 1900 1690 081				
Groove Dimension	ØA	x	ØB	x	F
	190.00		169.00		8.10
O-Ring Size	ID 164.47	x	C/S 7.00		

200.00

Part No	PTD 2000 1790 081				
Groove Dimension	ØA	x	ØB	x	F
	200.00		179.00		8.10
O-Ring Size	ID 177.17	x	C/S 7.00		

210.00

Part No	PTD 2100 1890 081				
Groove Dimension	ØA	x	ØB	x	F
	210.00		189.00		8.10
O-Ring Size	ID 189.87	x	C/S 7.00		

220.00

Part No	PTD 2200 1990 081				
Groove Dimension	ØA	x	ØB	x	F
	220.00		199.00		8.10
O-Ring Size	ID 196.22	x	C/S 7.00		

230.00

Part No	PTD 2300 2090 081				
Groove Dimension	ØA	x	ØB	x	F
	230.00		209.00		8.10
O-Ring Size	ID 202.57	x	C/S 7.00		

240.00

Part No	PTD 2400 2190 081				
Groove Dimension	ØA	x	ØB	x	F
	240.00		219.00		8.10
O-Ring Size	ID 215.27	x	C/S 7.00		

250.00

Part No	PTD 2500 2290 081				
Groove Dimension	ØA	x	ØB	x	F
	250.00		229.00		8.10
O-Ring Size	ID 227.97	x	C/S 7.00		

260.00

Part No	PTD 2600 2390 081				
Groove Dimension	ØA	x	ØB	x	F
	260.00		239.00		8.10
O-Ring Size	ID 227.97	x	C/S 7.00		

270.00

Part No	PTD 2700 2490 081				
Groove Dimension	ØA	x	ØB	x	F
	270.00		249.00		8.10
O-Ring Size	ID 240.67	x	C/S 7.00		

280.00

Part No	PTD 2800 2590 081				
Groove Dimension	ØA	x	ØB	x	F
	280.00		259.00		8.10
O-Ring Size	ID 253.37	x	C/S 7.00		

290.00

Part No	PTD 2900 2690 081				
Groove Dimension	ØA	x	ØB	x	F
	290.00		269.00		8.10
O-Ring Size	ID 266.07	x	C/S 7.00		

300.00

Part No	PTD 3000 2790 081					
Groove Dimension	ØA	x	ØB	x	F	
	300.00		279.00		8.10	
O-Ring Size	ID	278.77	x	C/S	7.00	

310.00

Part No	PTD 3100 2890 081					
Groove Dimension	ØA	x	ØB	x	F	
	310.00		289.00		8.10	
O-Ring Size	ID	278.77	x	C/S	7.00	

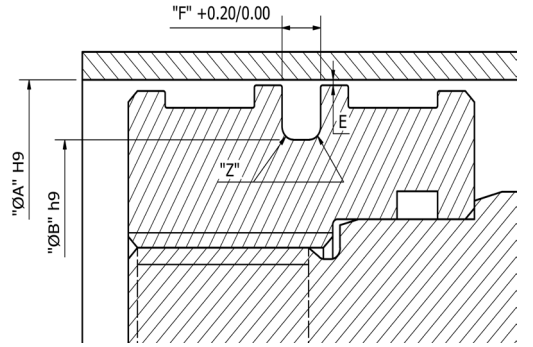

320.00

Part No	PTD 3200 2990 081					
Groove Dimension	ØA	x	ØB	x	F	
	320.00		299.00		8.10	
O-Ring Size	ID	291.47	x	C/S	7.00	

330.00

Part No	PTD 3300 3055 081					
Groove Dimension	ØA	x	ØB	x	F	
	330.00		305.50		8.10	
O-Ring Size	ID	304.17	x	C/S	7.00	

340.00

Part No	PTD 3400 3155 081					
Groove Dimension	ØA	x	ØB	x	F	
	340.00		315.50		8.10	
O-Ring Size	ID	304.17	x	C/S	7.00	

350.00

Part No	PTD 3500 3255 081					
Groove Dimension	ØA	x	ØB	x	F	
	350.00		325.50		8.10	
O-Ring Size	ID	316.87	x	C/S	7.00	

360.00

Part No	PTD 3600 3355 081					
Groove Dimension	ØA	x	ØB	x	F	
	360.00		335.50		8.10	
O-Ring Size	ID	329.57	x	C/S	7.00	

370.00

Part No	PTD 3700 3455 081					
Groove Dimension	ØA	x	ØB	x	F	
	370.00		345.50		8.10	
O-Ring Size	ID	342.27	x	C/S	7.00	

380.00

Part No	PTD 3800 3555 081					
Groove Dimension	ØA	x	ØB	x	F	
	380.00		355.50		8.10	
O-Ring Size	ID	354.97	x	C/S	7.00	

390.00

Part No	PTD 3900 3655 081					
Groove Dimension	ØA	x	ØB	x	F	
	390.00		365.50		8.10	
O-Ring Size	ID	354.97	x	C/S	7.00	

400.00

Part No	PTD 4000 3755 081					
Groove Dimension	ØA	x	ØB	x	F	
	400.00		375.50		8.10	
O-Ring Size	ID	367.67	x	C/S	7.00	

410.00

Part No	PTD 4100 3855 081					
Groove Dimension	ØA	x	ØB	x	F	
	410.00		385.50		8.10	
O-Ring Size	ID	380.37	x	C/S	7.00	

420.00

Part No	PTD 4200 3955 081					
Groove Dimension	ØA	x	ØB	x	F	
	420.00		395.50		8.10	
O-Ring Size	ID	393.07	x	C/S	7.00	

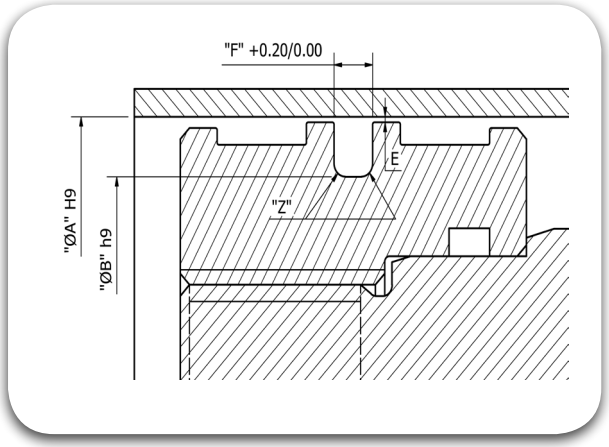

430.00

Part No	PTD 4300 4055 081				
Groove Dimension	ØA 430.00	x	ØB 405.50	x	F 8.10
O-Ring Size	ID 405.26	x	C/S 7.00		

440.00

Part No	PTD 4400 4155 081				
Groove Dimension	ØA 440.00	x	ØB 415.50	x	F 8.10
O-Ring Size	ID 405.26	x	C/S 7.00		

450.00

Part No	PTD 4500 4255 081				
Groove Dimension	ØA 450.00	x	ØB 425.50	x	F 8.10
O-Ring Size	ID 417.96	x	C/S 7.00		

460.00

Part No	PTD 4600 4355 081				
Groove Dimension	ØA 460.00	x	ØB 435.50	x	F 8.10
O-Ring Size	ID 430.66	x	C/S 7.00		

470.00

Part No	PTD 4700 4455 081				
Groove Dimension	ØA 470.00	x	ØB 445.50	x	F 8.10
O-Ring Size	ID 443.36	x	C/S 7.00		

480.00

Part No	PTD 4800 4555 081				
Groove Dimension	ØA 480.00	x	ØB 455.50	x	F 8.10
O-Ring Size	ID 443.36	x	C/S 7.00		

490.00

Part No	PTD 4900 4655 081				
Groove Dimension	ØA 490.00	x	ØB 465.50	x	F 8.10
O-Ring Size	ID 456.06	x	C/S 7.00		

500.00

Part No	PTD 5000 4755 081				
Groove Dimension	ØA 500.00	x	ØB 475.50	x	F 8.10
O-Ring Size	ID 468.76	x	C/S 7.00		

510.00

Part No	PTD 5100 4855 081				
Groove Dimension	ØA 510.00	x	ØB 485.50	x	F 8.10
O-Ring Size	ID 481.46	x	C/S 7.00		

520.00

Part No	PTD 5200 4955 081				
Groove Dimension	ØA 520.00	x	ØB 495.50	x	F 8.10
O-Ring Size	ID 494.16	x	C/S 7.00		

530.00

Part No	PTD 5300 5055 081				
Groove Dimension	ØA 530.00	x	ØB 505.50	x	F 8.10
O-Ring Size	ID 494.16	x	C/S 7.00		

540.00

Part No	PTD 5400 5155 081				
Groove Dimension	ØA 540.00	x	ØB 515.50	x	F 8.10
O-Ring Size	ID 506.86	x	C/S 7.00		

550.00

Part No	PTD 5500 5255 081				
Groove Dimension	ØA 550.00	x	ØB 525.50	x	F 8.10
O-Ring Size	ID 506.86	x	C/S 7.00		

560.00

Part No	PTD 5600 5355 081				
Groove Dimension	ØA	x	ØB	x	F
	560.00		535.50		8.10
O-Ring Size	ID	532.26	x	C/S	7.00

570.00

Part No	PTD 5700 5455 081				
Groove Dimension	ØA	x	ØB	x	F
	570.00		545.50		8.10
O-Ring Size	ID	557.66	x	C/S	7.00

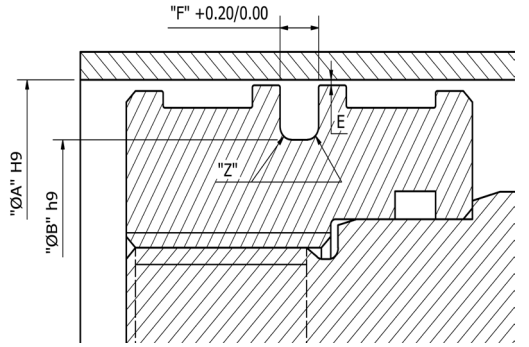

580.00

Part No	PTD 5800 5555 081				
Groove Dimension	ØA	x	ØB	x	F
	580.00		555.50		8.10
O-Ring Size	ID	557.66	x	C/S	7.00

590.00

Part No	PTD 5900 5655 081				
Groove Dimension	ØA	x	ØB	x	F
	590.00		565.50		8.10
O-Ring Size	ID	557.66	x	C/S	7.00

600.00

Part No	PTD 6000 5755 081				
Groove Dimension	ØA	x	ØB	x	F
	600.00		575.50		8.10
O-Ring Size	ID	557.66	x	C/S	7.00

610.00

Part No	PTD 6100 5855 081				
Groove Dimension	ØA	x	ØB	x	F
	610.00		585.50		8.10
O-Ring Size	ID	582.68	x	C/S	7.00

620.00

Part No	PTD 6200 5955 081				
Groove Dimension	ØA	x	ØB	x	F
	620.00		595.50		8.10
O-Ring Size	ID	582.68	x	C/S	7.00

630.00

Part No	PTD 6300 6055 081				
Groove Dimension	ØA	x	ØB	x	F
	630.00		605.50		8.10
O-Ring Size	ID	608.08	x	C/S	7.00

640.00

Part No	PTD 6400 6155 081				
Groove Dimension	ØA	x	ØB	x	F
	640.00		615.50		8.10
O-Ring Size	ID	608.08	x	C/S	7.00

650.00

Part No	PTD 6500 6255 081				
Groove Dimension	ØA	x	ØB	x	F
	650.00		625.50		8.10
O-Ring Size	ID	608.08	x	C/S	7.00

660.00

Part No	PTD 6600 6355 081				
Groove Dimension	ØA	x	ØB	x	F
	660.00		635.50		8.10
O-Ring Size	ID	633.48	x	C/S	7.00

670.00

Part No	PTD 6700 6420 095				
Groove Dimension	ØA	x	ØB	x	F
	670.00		642.00		9.50
O-Ring Size	ID	640.00	x	C/S	8.40

680.00

Part No	PTD 6800 6520 095				
Groove Dimension	ØA	x	ØB	x	F
	680.00		652.00		9.50
O-Ring Size	ID	650.00	x	C/S	8.40

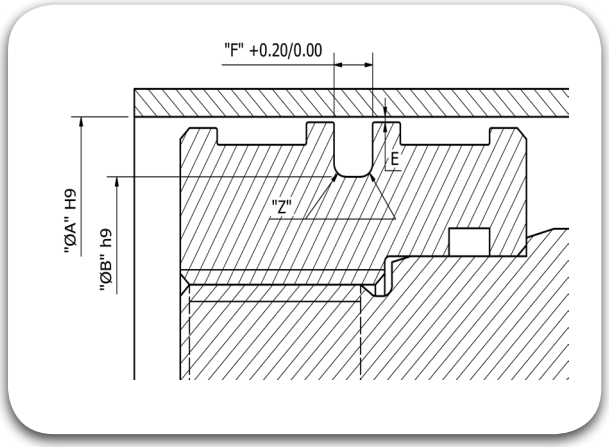

690.00

Part No	PTD 6900 6620 095
Groove Dimension	ØA 690.00 x ØB 662.00 x F 9.50
O-Ring Size	ID 660.00 x C/S 8.40

700.00

Part No	PTD 7000 6720 095
Groove Dimension	ØA 700.00 x ØB 672.00 x F 9.50
O-Ring Size	ID 670.00 x C/S 8.40

710.00

Part No	PTD 7100 6820 095
Groove Dimension	ØA 710.00 x ØB 682.00 x F 9.50
O-Ring Size	ID 680.00 x C/S 8.40

Piston Seals

PSS

TRIADA
TECHNOLOGIES

#SealingExcellence




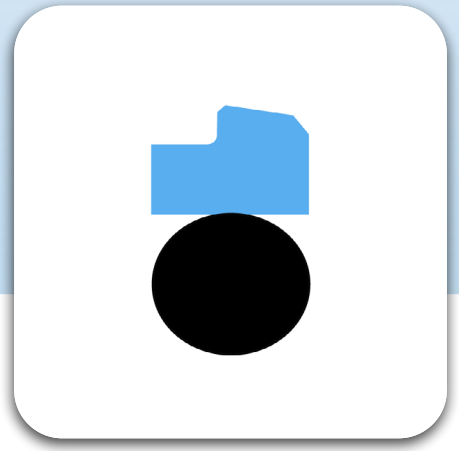

Description

The TRITILT® is composed of two elements. The dynamic seal is a ring in TRIALON® (filled PTFE) while the static seal is an O-Ring in TRIAFLEX® (NBR), also acting as an energizer. Depending on the application, media, cycle speed etc., the PTFE compound is selected and the O-Ring compound is selected considering the media compatibility, temperature etc.

Diameter Range	Ø8.00 – Ø2700.00 (Larger diameters on request)
Standard material	TRIALON® T415 (Bronze Filled PTFE) with Energiser in TRIAFLEX® T571 (NBR 70 Shores) (Other Compounds available, so as to suit the Application Conditions).
Temperature(°C)	-40ºC to 200ºC (Based on Elastomer Material).
Speed	≤ 15.0 m/s
Fluids	Hydraulic fluids (Mineral Oil based), Water, Air etc, depending on Seal Compounds selected.
Pressure	≤ 800 bar

Reciprocating | Oscillating | Rotary | Helix | Static | Single Acting | Double Acting

Material Details

Seal Material	Seal Material Code	O-Ring Material	O-Ring Material / Code
TRIALON® Bronze Filled PTFE	T415	TRIAFLEX® NBR 70	N (T571)
TRIALON® Carbon Filled PTFE	T417	TRIAFLEX® FKM 75	F (T675)
		TRIAFLEX® EPDM 70	E (T771)
		TRIAFLEX® HNBR 70	H (T531)

Nomenclature

Part No	PSS	1000	0849	063	T415	N
	Seal profile	Bore Dia x 10	Groove Dia x 10	Groove Width x 10	Seal Material Code	O-Ring Material Code

Groove Details

Bore Diameter "A" H9			Radial Clearance "E" max		Radius "Z"	O-Ring Cross Section
Heavy duty Searies	Standard Series	Light Duty Series	0-200 bar	200-400 bar		
-	8.00 - 16.90	17.00 - 26.90	0.30 - 0.20	0.20 - 0.15	0.30 - 0.50	1.78
-	17.00 – 26.90	27.00 – 59.90	0.40 - 0.25	0.25 - 0.15	0.50 - 0.80	2.62
17.00 – 26.90	27.00 – 59.90	60.00 – 199.90	0.40 - 0.25	0.25 - 0.15	0.80 - 1.20	3.53
27.00 – 59.90	60.00 – 199.90	200.00 – 255.90	0.50 - 0.30	0.30 - 0.20	1.20 - 1.50	5.33
60.00 – 199.90	200.00 – 255.90	256.00 – 669.90	0.50 - 0.30	0.30 - 0.20	1.50 - 2.00	7.00
200.00 – 255.90	256.00 – 669.90	670.00 – 999.90	0.60 - 0.35	0.35 - 0.25	1.50 - 2.00	7.00
256.00 – 669.90	670.00 – 999.90	-	0.70 - 0.40	0.40 - 0.30	2.00 - 3.00	8.40

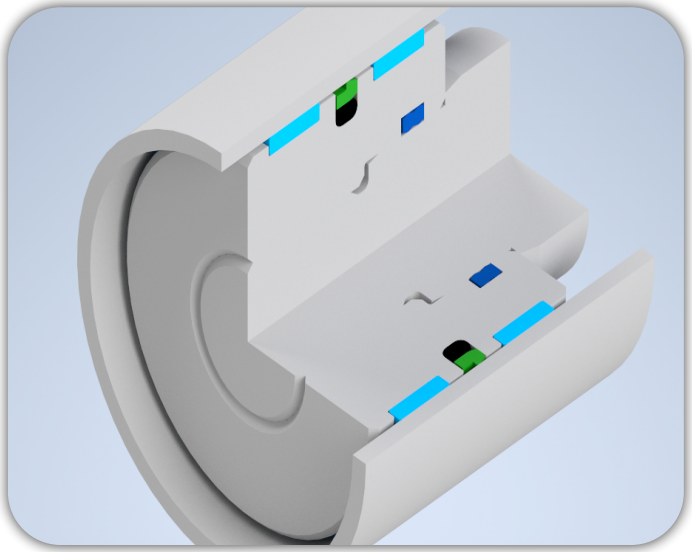

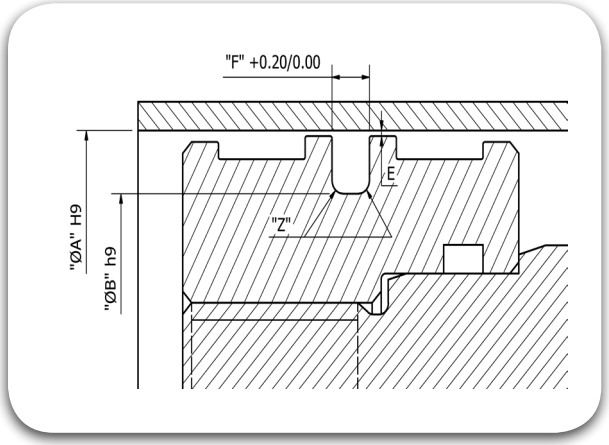

9.00

Part No	PSS 0090 0410 022				
Groove Dimension	ØA 9.00	x	ØB 4.10	x	F 2.20
O-Ring Size	ID 3.68	x	C/S 1.78		

10.00

Part No	PSS 0100 0510 022				
Groove Dimension	ØA 10.00	x	ØB 5.10	x	F 2.20
O-Ring Size	ID 4.80	x	C/S 1.80		

12.00

Part No	PSS 0120 0710 022				
Groove Dimension	ØA 12.00	x	ØB 7.10	x	F 2.20
O-Ring Size	ID 6.70	x	C/S 1.80		

14.00

Part No	PSS 0140 0910 022				
Groove Dimension	ØA 14.00	x	ØB 9.10	x	F 2.20
O-Ring Size	ID 8.75	x	C/S 1.80		

15.00

Part No	PSS 0150 0101 022				
Groove Dimension	ØA 15.00	x	ØB 10.10	x	F 2.20
O-Ring Size	ID 9.25	x	C/S 1.78		

16.00

Part No	PSS 0160 0111 022				
Groove Dimension	ØA 16.00	x	ØB 11.10	x	F 2.20
O-Ring Size	ID 10.82	x	C/S 1.78		

18.00

Part No	PSS 0180 0107 032				
Groove Dimension	ØA 18.00	x	ØB 10.70	x	F 3.20
O-Ring Size	ID 9.19	x	C/S 2.62		

20.00

Part No	PSS 0200 0151 022				
Groove Dimension	ØA 20.00	x	ØB 15.10	x	F 2.20
O-Ring Size	ID 14.00	x	C/S 1.78		

20.00

Part No	PSS 0200 0127 032				
Groove Dimension	ØA 20.00	x	ØB 12.70	x	F 3.20
O-Ring Size	ID 12.37	x	C/S 2.62		

22.00

Part No	PSS 0220 0147 032				
Groove Dimension	ØA 22.00	x	ØB 14.70	x	F 3.20
O-Ring Size	ID 13.94	x	C/S 2.62		

25.00

Part No	PSS 0250 0177 032				
Groove Dimension	ØA 25.00	x	ØB 17.70	x	F 3.20
O-Ring Size	ID 17.12	x	C/S 2.62		

25.00

Part No	PSS 0250 0143 042				
Groove Dimension	ØA 25.00	x	ØB 14.30	x	F 4.20
O-Ring Size	ID 13.87	x	C/S 3.53		

28.00

Part No	PSS 0280 0173 042				
Groove Dimension	ØA 28.00	x	ØB 17.30	x	F 4.20
O-Ring Size	ID 15.47	x	C/S 3.53		

30.00

Part No	PSS 0300 0227 032				
Groove Dimension	ØA	x	ØB	x	F
	30.00		22.70		3.20
O-Ring Size	ID	21.89	x	C/S	2.62

30.00

Part No	PSS 0300 0193 042				
Groove Dimension	ØA	x	ØB	x	F
	30.00		19.30		4.20
O-Ring Size	ID	18.66	x	C/S	3.53

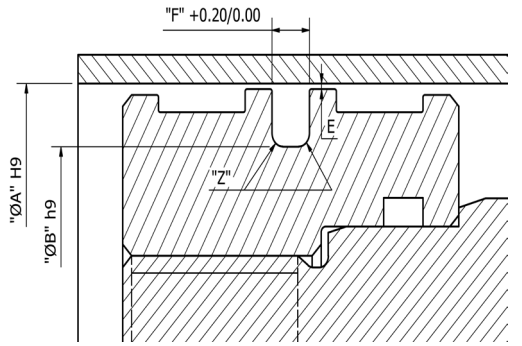

32.00

Part No	PSS 0320 0247 032				
Groove Dimension	ØA	x	ØB	x	F
	32.00		24.70		3.20
O-Ring Size	ID	23.47	x	C/S	2.62

32.00

Part No	PSS 0320 0213 042				
Groove Dimension	ØA	x	ØB	x	F
	32.00		21.30		4.20
O-Ring Size	ID	20.22	x	C/S	3.53

35.00

Part No	PSS 0350 0243 042				
Groove Dimension	ØA	x	ØB	x	F
	35.00		24.30		4.20
O-Ring Size	ID	23.40	x	C/S	3.53

40.00

Part No	PSS 0400 0327 032				
Groove Dimension	ØA	x	ØB	x	F
	40.00		32.70		3.20
O-Ring Size	ID	31.42	x	C/S	2.62

40.00

Part No	PSS 0400 0293 042				
Groove Dimension	ØA	x	ØB	x	F
	40.00		29.30		4.20
O-Ring Size	ID	28.17	x	C/S	3.53

42.00

Part No	PSS 0420 0313 042				
Groove Dimension	ØA	x	ØB	x	F
	42.00		31.30		4.20
O-Ring Size	ID	29.75	x	C/S	3.53

45.00

Part No	PSS 0450 0343 042				
Groove Dimension	ØA	x	ØB	x	F
	45.00		34.30		4.20
O-Ring Size	ID	32.92	x	C/S	5.33

48.00

Part No	PSS 0480 0373 042				
Groove Dimension	ØA	x	ØB	x	F
	48.00		37.30		4.20
O-Ring Size	ID	36.09	x	C/S	3.53

50.00

Part No	PSS 0500 0393 042				
Groove Dimension	ØA	x	ØB	x	F
	50.00		39.30		4.20
O-Ring Size	ID	37.70	x	C/S	3.53

50.00

Part No	PSS 0500 0349 063				
Groove Dimension	ØA	x	ØB	x	F
	50.00		34.90		6.30
O-Ring Size	ID	32.69	x	C/S	5.33

52.00

Part No	PSS 0520 0413 042				
Groove Dimension	ØA	x	ØB	x	F
	52.00		41.30		4.20
O-Ring Size	ID	40.87	x	C/S	3.53

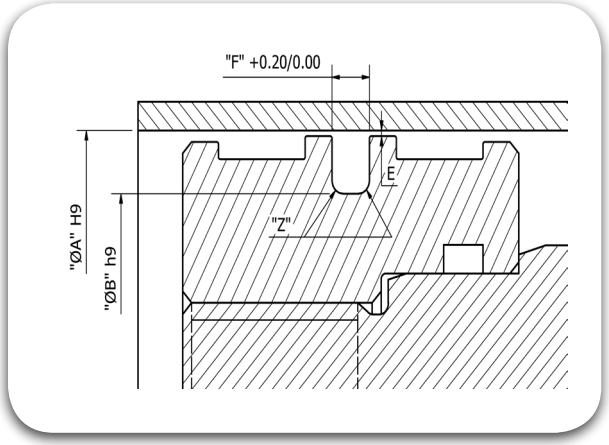

55.00

Part No	PSS 0550 0443 042					
Groove Dimension	ØA	x	ØB	x	F	
	55.00		44.30		4.20	
O-Ring Size	ID	44.04	x	C/S	3.53	

60.00

Part No	PSS 0600 0449 063					
Groove Dimension	ØA	x	ØB	x	F	
	60.00		44.90		6.30	
O-Ring Size	ID	43.82	x	C/S	5.33	

63.00

Part No	PSS 0630 0523 042					
Groove Dimension	ØA	x	ØB	x	F	
	63.00		52.30		4.20	
O-Ring Size	ID	50.39	x	C/S	3.53	

63.00

Part No	PSS 0630 0479 063					
Groove Dimension	ØA	x	ØB	x	F	
	63.00		47.90		6.30	
O-Ring Size	ID	46.99	x	C/S	5.33	

65.00

Part No	PSS 0650 0499 063					
Groove Dimension	ØA	x	ØB	x	F	
	65.00		49.90		6.30	
O-Ring Size	ID	46.99	x	C/S	5.33	

70.00

Part No	PSS 0700 0593 042					
Groove Dimension	ØA	x	ØB	x	F	
	70.00		59.30		4.20	
O-Ring Size	ID	56.74	x	C/S	3.53	

70.00

Part No	PSS 0700 0549 063					
Groove Dimension	ØA	x	ØB	x	F	
	70.00		54.90		6.30	
O-Ring Size	ID	53.34	x	C/S	5.33	

75.00

Part No	PSS 0750 0599 063					
Groove Dimension	ØA	x	ØB	x	F	
	75.00		59.90		6.30	
O-Ring Size	ID	56.52	x	C/S	5.33	

80.00

Part No	PSS 0800 0649 063					
Groove Dimension	ØA	x	ØB	x	F	
	80.00		64.90		6.30	
O-Ring Size	ID	62.87	x	C/S	5.33	

80.00

Part No	PSS 0800 0595 081					
Groove Dimension	ØA	x	ØB	x	F	
	80.00		59.50		8.10	
O-Ring Size	ID	58.00	x	C/S	7.00	

85.00

Part No	PSS 0850 0699 063					
Groove Dimension	ØA	x	ØB	x	F	
	85.00		69.90		6.30	
O-Ring Size	ID	69.22	x	C/S	5.33	

85.00

Part No	PSS 0850 0645 081					
Groove Dimension	ØA	x	ØB	x	F	
	85.00		64.50		8.10	
O-Ring Size	ID	63.00	x	C/S	7.00	

90.00

Part No	PSS 0900 0749 063					
Groove Dimension	ØA	x	ØB	x	F	
	90.00		74.90		6.30	
O-Ring Size	ID	72.39	x	C/S	5.33	

90.00

Part No	PSS 0900 0695 081
Groove Dimension	ØA 90.00 x ØB 69.50 x F 8.10
O-Ring Size	ID 68.00 x C/S 7.00

95.00

Part No	PSS 0950 0799 063
Groove Dimension	ØA 95.00 x ØB 79.90 x F 6.30
O-Ring Size	ID 78.74 x C/S 5.33

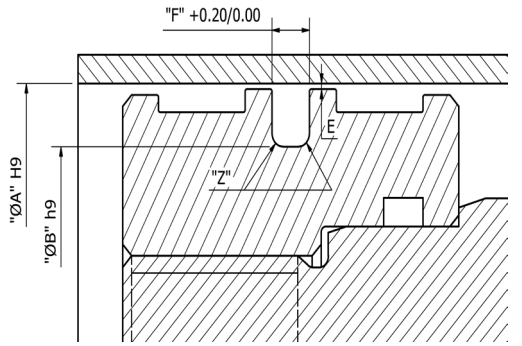

95.00

Part No	PSS 0950 0745 081
Groove Dimension	ØA 95.00 x ØB 74.50 x F 8.10
O-Ring Size	ID 73.00 x C/S 7.00

100.00

Part No	PSS 1000 0849 063
Groove Dimension	ØA 100.00 x ØB 84.90 x F 6.30
O-Ring Size	ID 81.92 x C/S 5.33

100.00

Part No	PSS 1000 0795 081
Groove Dimension	ØA 100.00 x ØB 79.50 x F 8.10
O-Ring Size	ID 78.00 x C/S 7.00

105.00

Part No	PSS 1050 0899 063
Groove Dimension	ØA 105.00 x ØB 89.90 x F 6.30
O-Ring Size	ID 88.27 x C/S 5.33

105.00

Part No	PSS 1050 0845 081
Groove Dimension	ØA 105.00 x ØB 84.50 x F 8.10
O-Ring Size	ID 83.00 x C/S 7.00

106.00

Part No	PSS 1060 0909 063
Groove Dimension	ØA 106.00 x ØB 90.90 x F 6.30
O-Ring Size	ID 88.27 x C/S 5.33

110.00

Part No	PSS 1100 0949 063
Groove Dimension	ØA 110.00 x ØB 94.90 x F 6.30
O-Ring Size	ID 91.44 x C/S 5.33

110.00

Part No	PSS 1100 0895 081
Groove Dimension	ØA 110.00 x ØB 89.50 x F 8.10
O-Ring Size	ID 88.00 x C/S 7.00

115.00

Part No	PSS 1150 0999 063
Groove Dimension	ØA 115.00 x ØB 99.90 x F 6.30
O-Ring Size	ID 97.79 x C/S 5.33

115.00

Part No	PSS 1150 0945 081
Groove Dimension	ØA 115.00 x ØB 94.50 x F 8.10
O-Ring Size	ID 93.00 x C/S 7.00

120.00

Part No	PSS 1200 1049 063
Groove Dimension	ØA 120.00 x ØB 104.90 x F 6.30
O-Ring Size	ID 104.14 x C/S 5.33

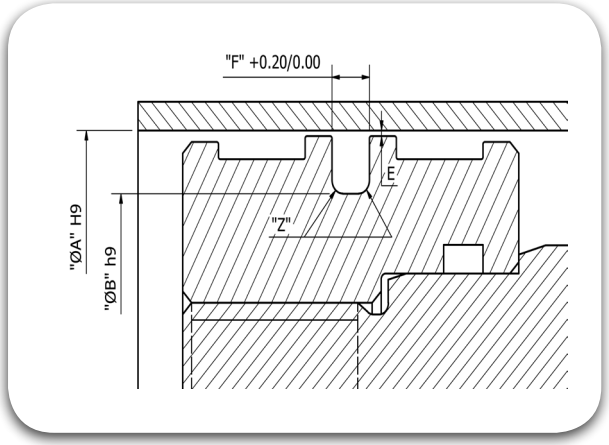

120.00

Part No	PSS 1200 0995 081		
Groove Dimension	ØA 120.00	ØB 99.50	F 8.10
O-Ring Size	ID 98.00	C/S 7.00	

125.00

Part No	PSS 1250 1099 063		
Groove Dimension	ØA 125.00	ØB 109.90	F 6.30
O-Ring Size	ID 107.32	C/S 5.33	

125.00

Part No	PSS 1250 1045 081		
Groove Dimension	ØA 125.00	ØB 104.50	F 8.10
O-Ring Size	ID 103.00	C/S 7.00	

130.00

Part No	PSS 1300 1149 063		
Groove Dimension	ØA 130.00	ØB 114.90	F 6.30
O-Ring Size	ID 113.67	C/S 5.33	

130.00

Part No	PSS 1300 1095 081		
Groove Dimension	ØA 130.00	ØB 109.50	F 8.10
O-Ring Size	ID 108.00	C/S 7.00	

135.00

Part No	PSS 1350 1145 081		
Groove Dimension	ØA 135.00	ØB 114.50	F 8.10
O-Ring Size	ID 113.67	C/S 7.00	

140.00

Part No	PSS 1400 1195 081		
Groove Dimension	ØA 140.00	ØB 119.50	F 8.10
O-Ring Size	ID 116.84	C/S 7.00	

145.00

Part No	PSS 1450 1245 081		
Groove Dimension	ØA 145.00	ØB 124.50	F 8.10
O-Ring Size	ID 123.19	C/S 7.00	

150.00

Part No	PSS 1500 1295 081		
Groove Dimension	ØA 150.00	ØB 129.50	F 8.10
O-Ring Size	ID 126.37	C/S 7.00	

155.00

Part No	PSS 1550 1399 063		
Groove Dimension	ØA 155.00	ØB 139.90	F 6.30
O-Ring Size	ID 135.89	C/S 5.33	

160.00

Part No	PSS 1600 1449 063		
Groove Dimension	ØA 160.00	ØB 144.90	F 6.30
O-Ring Size	ID 142.24	C/S 5.33	

160.00

Part No	PSS 1600 1395 081		
Groove Dimension	ØA 160.00	ØB 139.50	F 8.10
O-Ring Size	ID 135.89	C/S 7.00	

165.00

Part No	PSS 1650 1499 063		
Groove Dimension	ØA 165.00	ØB 149.90	F 6.30
O-Ring Size	ID 148.49	C/S 5.33	

165.00

Part No	PSS 1650 1445 081
Groove Dimension	ØA 165.00 x ØB 144.50 x F 8.10
O-Ring Size	ID 142.24 x C/S 7.00

170.00

Part No	PSS 1700 1495 081
Groove Dimension	ØA 170.00 x ØB 149.50 x F 8.10
O-Ring Size	ID 145.42 x C/S 7.00

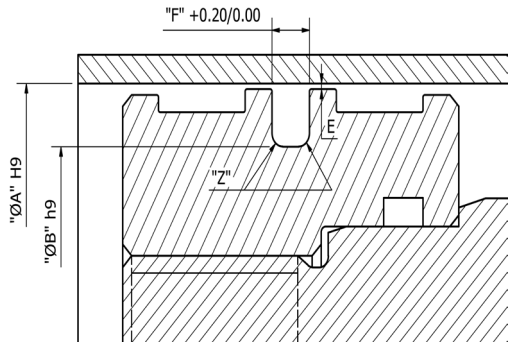

175.00

Part No	PSS 1750 1595 063
Groove Dimension	ØA 175.00 x ØB 159.50 x F 6.30
O-Ring Size	ID 158.12 x C/S 5.33

180.00

Part No	PSS 1800 1649 063
Groove Dimension	ØA 180.00 x ØB 164.90 x F 6.30
O-Ring Size	ID 164.47 x C/S 7.00

180.00

Part No	PSS 1800 1595 081
Groove Dimension	ØA 180.00 x ØB 159.50 x F 8.10
O-Ring Size	ID 158.12 x C/S 7.00

190.00

Part No	PSS 1900 1749 063
Groove Dimension	ØA 190.00 x ØB 174.90 x F 6.30
O-Ring Size	ID 170.82 x C/S 5.33

190.00

Part No	PSS 1900 1695 081
Groove Dimension	ØA 190.00 x ØB 169.50 x F 8.10
O-Ring Size	ID 164.47 x C/S 5.33

200.00

Part No	PSS 2000 1849 063
Groove Dimension	ØA 200.00 x ØB 184.90 x F 6.30
O-Ring Size	ID 183.52 x C/S 5.33

200.00

Part No	PSS 2000 1795 081
Groove Dimension	ØA 200.00 x ØB 179.50 x F 8.10
O-Ring Size	ID 177.17 x C/S 7.00

205.00

Part No	PSS 2050 1845 081
Groove Dimension	ØA 205.00 x ØB 184.50 x F 8.10
O-Ring Size	ID 183.52 x C/S 7.00

210.00

Part No	PSS 2100 1895 081
Groove Dimension	ØA 210.00 x ØB 189.50 x F 8.10
O-Ring Size	ID 183.52 x C/S 7.00

220.00

Part No	PSS 2200 2049 063
Groove Dimension	ØA 220.00 x ØB 204.90 x F 6.30
O-Ring Size	ID 202.57 x C/S 5.33

220.00

Part No	PSS 2200 1995 081
Groove Dimension	ØA 220.00 x ØB 199.50 x F 8.10
O-Ring Size	ID 196.22 x C/S 7.00

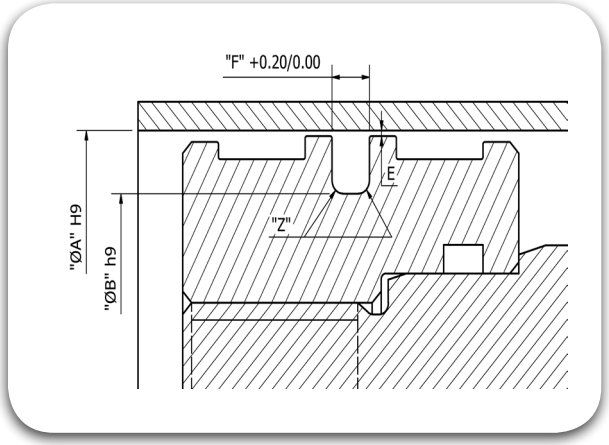

230.00

Part No	PSS 2300 2095 081					
Groove Dimension	ØA	x	ØB	x	F	
	230.00		209.50		8.10	
O-Ring Size	ID	208.92	x	C/S	7.00	

240.00

Part No	PSS 2400 2195 081					
Groove Dimension	ØA	x	ØB	x	F	
	240.00		219.50		8.10	
O-Ring Size	ID	215.27	x	C/S	7.00	

250.00

Part No	PSS 2500 2295 081					
Groove Dimension	ØA	x	ØB	x	F	
	250.00		229.50		8.10	
O-Ring Size	ID	227.97	x	C/S	7.00	

250.00

Part No	PSS 2500 2260 081					
Groove Dimension	ØA	x	ØB	x	F	
	250.00		226.00		8.10	
O-Ring Size	ID	227.97	x	C/S	7.00	

260.00

Part No	PSS 2600 2360 081					
Groove Dimension	ØA	x	ØB	x	F	
	260.00		236.00		8.10	
O-Ring Size	ID	227.97	x	C/S	7.00	

270.00

Part No	PSS 2700 2460 081					
Groove Dimension	ØA	x	ØB	x	F	
	270.00		246.00		8.10	
O-Ring Size	ID	240.67	x	C/S	7.00	

280.00

Part No	PSS 2800 2560 081					
Groove Dimension	ØA	x	ØB	x	F	
	280.00		256.00		8.10	
O-Ring Size	ID	253.37	x	C/S	7.00	

300.00

Part No	PSS 3000 2760 081					
Groove Dimension	ØA	x	ØB	x	F	
	300.00		276.00		8.10	
O-Ring Size	ID	266.07	x	C/S	7.00	

306.00

Part No	PSS 3060 2855 081					
Groove Dimension	ØA	x	ØB	x	F	
	306.00		285.50		8.10	
O-Ring Size	ID	278.77	x	C/S	7.00	

310.00

Part No	PSS 3100 2860 081					
Groove Dimension	ØA	x	ØB	x	F	
	310.00		286.00		8.10	
O-Ring Size	ID	278.77	x	C/S	7.00	

320.00

Part No	PSS 3200 2995 081					
Groove Dimension	ØA	x	ØB	x	F	
	320.00		299.50		8.10	
O-Ring Size	ID	291.47	x	C/S	7.00	

320.00

Part No	PSS 3200 2960 081					
Groove Dimension	ØA	x	ØB	x	F	
	320.00		296.00		8.10	
O-Ring Size	ID	291.47	x	C/S	7.00	

330.00

Part No	PSS 3300 3060 081					
Groove Dimension	ØA	x	ØB	x	F	
	330.00		306.00		8.10	
O-Ring Size	ID	304.17	x	C/S	7.00	

340.00

Part No	PSS 3400 3160 081				
Groove Dimension	ØA	x	ØB	x	F
	340.00		316.00		8.10
O-Ring Size	ID 316.87	x	C/S 7.00		

345.00

Part No	PSS 3450 3245 081				
Groove Dimension	ØA	x	ØB	x	F
	345.00		324.50		8.10
O-Ring Size	ID 316.87	x	C/S 7.00		

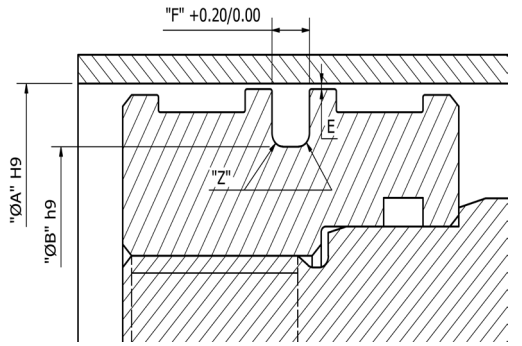

350.00

Part No	PSS 3500 3260 081				
Groove Dimension	ØA	x	ØB	x	F
	350.00		326.00		8.10
O-Ring Size	ID 316.87	x	C/S 7.00		

360.00

Part No	PSS 3600 3360 081				
Groove Dimension	ØA	x	ØB	x	F
	360.00		336.00		8.10
O-Ring Size	ID 329.57	x	C/S 7.00		

370.00

Part No	PSS 3700 3460 081				
Groove Dimension	ØA	x	ØB	x	F
	370.00		346.00		8.10
O-Ring Size	ID 342.27	x	C/S 7.00		

380.00

Part No	PSS 3800 3560 081				
Groove Dimension	ØA	x	ØB	x	F
	380.00		356.00		8.10
O-Ring Size	ID 354.97	x	C/S 7.00		

400.00

Part No	PSS 4000 3760 081				
Groove Dimension	ØA	x	ØB	x	F
	400.00		376.00		8.10
O-Ring Size	ID 367.67	x	C/S 7.00		

420.00

Part No	PSS 4200 3960 081				
Groove Dimension	ØA	x	ØB	x	F
	420.00		396.00		8.10
O-Ring Size	ID 393.07	x	C/S 7.00		

430.00

Part No	PSS 4300 4060 081				
Groove Dimension	ØA	x	ØB	x	F
	430.00		406.00		8.10
O-Ring Size	ID 405.26	x	C/S 7.00		

440.00

Part No	PSS 4400 4160 081				
Groove Dimension	ØA	x	ØB	x	F
	440.00		416.00		8.10
O-Ring Size	ID 405.26	x	C/S 7.00		

450.00

Part No	PSS 4500 4260 081				
Groove Dimension	ØA	x	ØB	x	F
	450.00		426.00		8.10
O-Ring Size	ID 417.96	x	C/S 7.00		

480.00

Part No	PSS 4800 4560 081				
Groove Dimension	ØA	x	ØB	x	F
	480.00		456.00		8.10
O-Ring Size	ID 456.06	x	C/S 7.00		

500.00

Part No	PSS 5000 4760 081				
Groove Dimension	ØA	x	ØB	x	F
	500.00		476.00		8.10
O-Ring Size	ID 468.76	x	C/S 7.00		

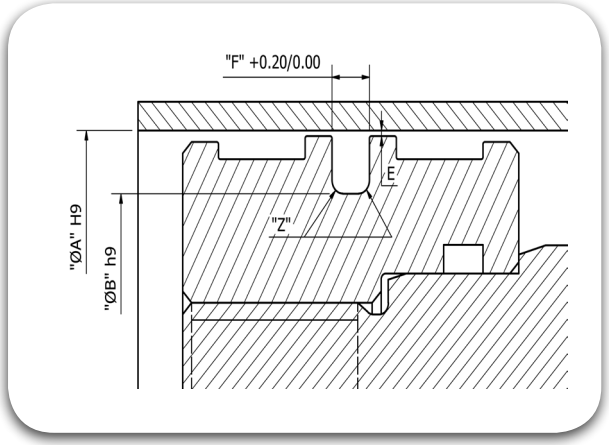

520.00

Part No	PSS 5200 4995 081				
Groove Dimension	ØA	x	ØB	x	F
	520.00		499.50		8.10
O-Ring Size	ID 494.16	x	C/S 7.00		

540.00

Part No	PSS 5400 5160 081				
Groove Dimension	ØA	x	ØB	x	F
	540.00		516.00		8.10
O-Ring Size	ID 506.86	x	C/S 7.00		

600.00

Part No	PSS 6000 5760 081				
Groove Dimension	ØA	x	ØB	x	F
	600.00		576.00		8.10
O-Ring Size	ID 557.66	x	C/S 7.00		

650.00

Part No	PSS 6500 6260 081				
Groove Dimension	ØA	x	ØB	x	F
	650.00		626.00		8.10
O-Ring Size	ID 608.08	x	C/S 7.00		

700.00

Part No	PSS 7000 6727 095				
Groove Dimension	ØA	x	ØB	x	F
	700.00		672.70		9.50
O-Ring Size	ID 670.00	x	C/S 8.40		

800.00

Part No	PSS 8000 7727 095				
Groove Dimension	ØA	x	ØB	x	F
	800.00		772.70		9.50
O-Ring Size	ID 770.00	x	C/S 8.40		

860.00

Part No	PSS 8600 8327 095				
Groove Dimension	ØA	x	ØB	x	F
	860.00		832.70		9.50
O-Ring Size	ID 830.00	x	C/S 8.40		

900.00

Part No	PSS 9000 8727 095				
Groove Dimension	ØA	x	ØB	x	F
	900.00		872.70		9.50
O-Ring Size	ID 870.00	x	C/S 8.40		

920.00

Part No	PSS 9200 8927 095				
Groove Dimension	ØA	x	ØB	x	F
	920.00		892.70		9.50
O-Ring Size	ID 890.00	x	C/S 8.40		

1000.00

Part No	PSSX1000 0972 095				
Groove Dimension	ØA	x	ØB	x	F
	1000.00		972.70		9.50
O-Ring Size	ID 970.00	x	C/S 8.40		

1000.00

Part No	PSSX1000 0962 138				
Groove Dimension	ØA	x	ØB	x	F
	1000.00		962.00		13.80
O-Ring Size	ID 960.00	x	C/S 12.00		

1200.00

Part No	PSSX1200 1172 095				
Groove Dimension	ØA	x	ØB	x	F
	1200.00		1172.70		9.50
O-Ring Size	ID 1170.0	x	C/S 8.40		

1200.00

Part No	PSSX1200 1162 138				
Groove Dimension	ØA	x	ØB	x	F
	1200.00		1162.00		13.80
O-Ring Size	ID 1160.0	x	C/S 12.00		

1500.00

Part No	PSSX1500 1462 138					
Groove Dimension	ØA	x	ØB	x	F	
	1500.00		1462.00		13.80	
O-Ring Size	ID	1460.0	x	C/S	12.00	

2000.00

Part No	PSSX2000 1962 138					
Groove Dimension	ØA	x	ØB	x	F	
	2000.00		1962.00		13.80	
O-Ring Size	ID	1960.0	x	C/S	12.00	

2700.00

Part No	PSSX2700 2662 138					
Groove Dimension	ØA	x	ØB	x	F	
	2700.00		2662.00		13.80	
O-Ring Size	ID	2660.0	x	C/S	12.00	

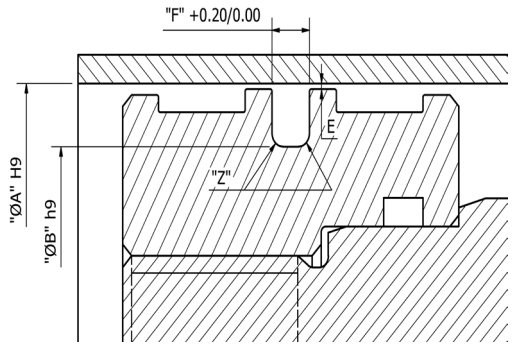

Piston Seals

PQD

TRIADA
TECHNOLOGIES

#SealingExcellence




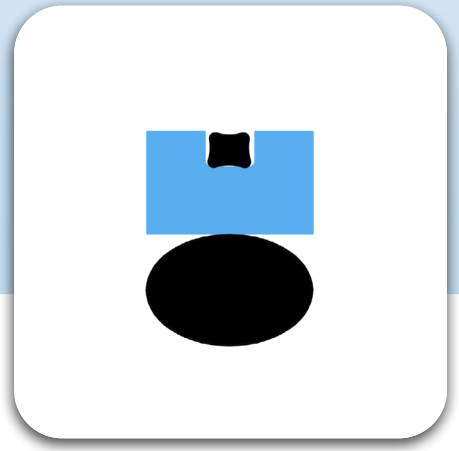

Description

The PQD is a Double Acting Seal made of three sealing elements, the dynamic seal is a ring in TRIALON® (filled PTFE) with the LOBE Ring in TRIAFLEX® (NBR) at the centre, which results in low friction, while the static seal is an O-Ring in TRIAFLEX®, also acting as an energizer. Depending on the application, media, cycle speed etc., the PTFE compound is selected and the O-Ring & Lobe Ring compound also can be changed from the standard compounds, considering the media compatibility, temperature etc.

Diameter Range	Ø16.00 – Ø700.00
Standard material	TRIALON® T415 (Bronze Filled PTFE) with Energiser & Lobe ring in TRIAFLEX® T571 (NBR 70 Shores) (Other Compounds available, so as to suit the Application Conditions).
Temperature(°C)	-40ºC to 200ºC (Based on Elastomer Material).
Speed	≤ 2.00 m/s
Fluids	Hydraulic fluids (Mineral Oil based), Water, Air etc, depending on Seal Compounds selected.
Pressure	≤ 400 bar

Reciprocating | Oscillating | Rotary | Helix | Static | Single Acting | Double Acting

Material Details

Seal Material	Seal Material Code	O-Ring / Lobe Ring Material	O-Ring / Lobe Ring Material / Code
TRIALON® Bronze Filled PTFE	T415	TRIAFLEX® NBR 70	N (T571)
TRIALON® Carbon Filled PTFE	T417	TRIAFLEX® FKM 75	F (T675)
		TRIAFLEX® EPDM 70	E (T771)
		TRIAFLEX® HNBR 70	H (T531)

Nomenclature

Part No	PQD	0160	0050	042	T415	N
	Seal profile	Bore Dia x 10	Groove Dia x 10	Groove Width x 10	Seal Material Code	O-Ring / Lobe Ring Material Code

Groove Details

Bore Diameter "A" H9		Radius	Radial Clearance "E" max		Lobe Ring Cross Section	O-Ring Cross Section
Standard Series	Light Duty Series	"Z" max	0-200 bar	200-400 bar		
15.00 - 39.90	40.00 -79.90	1.00	0.15	0.10	1.78	3.53
40.00 - 79.90	80.00 -132.90	1.30	0.20	0.15	1.78	5.33
80.00 -132.90	133.00 - 252.90	1.80	0.20	0.15	2.62	7.00
133.00 - 252.90		1.80	0.20	0.15	2.62	7.00
253.00 - 462.90		2.50	0.30	0.25	3.53	8.40
463.00 - 462.90		3.00	0.40	0.35	5.33	10.00

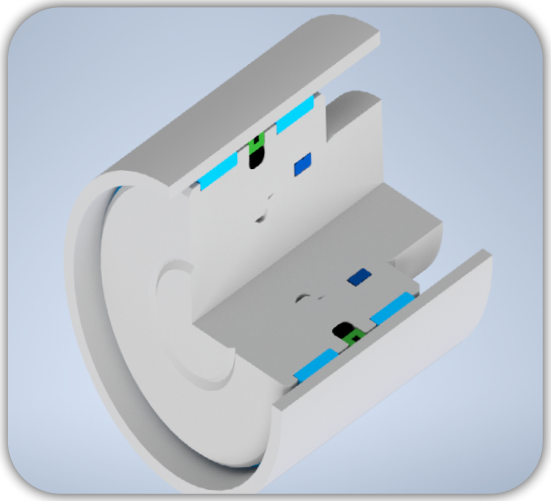

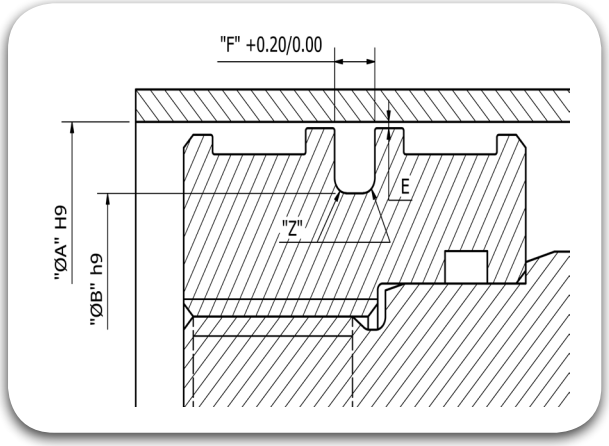

16.00

Part No	PQD 0160 0050 042					
Groove Dimension	ØA 16.00	x	ØB 5.00	x	F 4.20	
O-Ring Size	ID 4.34	x	C/S 3.53			
Lobe-Ring Size	ID 12.42	x	C/S 1.78			

18.00

Part No	PQD 0180 0070 042					
Groove Dimension	ØA 18.00	x	ØB 7.00	x	F 4.20	
O-Ring Size	ID 6.42	x	C/S 3.53			
Lobe-Ring Size	ID 14.00	x	C/S 1.78			

20.00

Part No	PQD 0200 0090 042					
Groove Dimension	ØA 20.00	x	ØB 9.00	x	F 4.20	
O-Ring Size	ID 8.42	x	C/S 3.53			
Lobe-Ring Size	ID 15.60	x	C/S 1.78			

22.00

Part No	PQD 0220 0110 042					
Groove Dimension	ØA 22.00	x	ØB 11.00	x	F 4.20	
O-Ring Size	ID 10.69	x	C/S 3.53			
Lobe-Ring Size	ID 17.17	x	C/S 1.78			

25.00

Part No	PQD 0250 0140 042					
Groove Dimension	ØA 25.00	x	ØB 14.00	x	F 4.20	
O-Ring Size	ID 13.87	x	C/S 3.53			
Lobe-Ring Size	ID 20.35	x	C/S 1.78			

28.00

Part No	PQD 0280 0170 042					
Groove Dimension	ØA 28.00	x	ØB 17.00	x	F 4.20	
O-Ring Size	ID 15.47	x	C/S 3.53			
Lobe-Ring Size	ID 23.52	x	C/S 1.78			

30.00

Part No	PQD 0300 0190 042					
Groove Dimension	ØA 30.00	x	ØB 19.00	x	F 4.20	
O-Ring Size	ID 18.66	x	C/S 3.53			
Lobe-Ring Size	ID 25.12	x	C/S 1.78			

32.00

Part No	PQD 0320 0210 042					
Groove Dimension	ØA 32.00	x	ØB 21.00	x	F 4.20	
O-Ring Size	ID 20.22	x	C/S 3.53			
Lobe-Ring Size	ID 26.70	x	C/S 1.78			

35.00

Part No	PQD 0350 0240 042					
Groove Dimension	ØA 35.00	x	ØB 24.00	x	F 4.20	
O-Ring Size	ID 23.40	x	C/S 3.53			
Lobe-Ring Size	ID 29.87	x	C/S 1.78			

40.00

Part No	PQD 0400 0290 042					
Groove Dimension	ØA 40.00	x	ØB 29.00	x	F 4.20	
O-Ring Size	ID 28.17	x	C/S 3.53			
Lobe-Ring Size	ID 34.65	x	C/S 1.78			

42.00

Part No	PQD 0420 0310 042				
Groove Dimension	ØA 42.00	x	ØB 31.00	x	F 4.20
O-Ring Size	ID 29.75	x	C/S 3.53		
Lobe-Ring Size	ID 37.82	x	C/S 1.78		

45.00

Part No	PQD 0450 0340 042				
Groove Dimension	ØA 45.00	x	ØB 34.00	x	F 4.20
O-Ring Size	ID 32.92	x	C/S 3.53		
Lobe-Ring Size	ID 37.82	x	C/S 1.78		

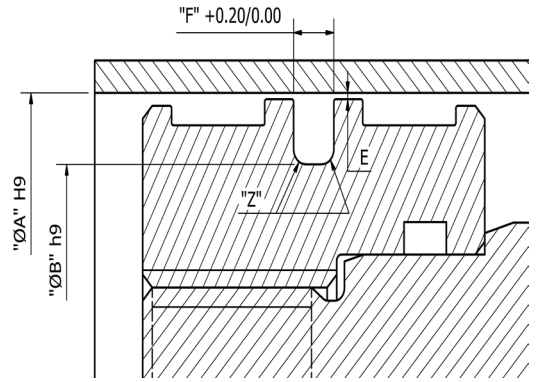

48.00

Part No	PQD 0480 0370 042				
Groove Dimension	ØA 48.00	x	ØB 37.00	x	F 4.20
O-Ring Size	ID 36.09	x	C/S 3.53		
Lobe-Ring Size	ID 41.00	x	C/S 1.78		

50.00

Part No	PQD 0500 0390 042				
Groove Dimension	ØA 50.00	x	ØB 39.00	x	F 4.20
O-Ring Size	ID 37.70	x	C/S 3.53		
Lobe-Ring Size	ID 44.17	x	C/S 1.78		

50.00

Part No	PQD 0500 0345 063				
Groove Dimension	ØA 50.00	x	ØB 34.50	x	F 6.30
O-Ring Size	ID 32.69	x	C/S 3.53		
Lobe-Ring Size	ID 44.17	x	C/S 1.78		

52.00

Part No	PQD 0520 0410 042				
Groove Dimension	ØA 52.00	x	ØB 41.00	x	F 4.20
O-Ring Size	ID 40.87	x	C/S 3.53		
Lobe-Ring Size	ID 47.35	x	C/S 1.78		

55.00

Part No	PQD 0550 0440 042				
Groove Dimension	ØA 55.00	x	ØB 44.00	x	F 4.20
O-Ring Size	ID 44.04	x	C/S 3.53		
Lobe-Ring Size	ID 50.52	x	C/S 1.78		

60.00

Part No	PQD 0600 0490 042				
Groove Dimension	ØA 60.00	x	ØB 49.00	x	F 4.20
O-Ring Size	ID 47.22	x	C/S 3.53		
Lobe-Ring Size	ID 53.70	x	C/S 1.78		

63.00

Part No	PQD 0630 0520 042				
Groove Dimension	ØA 63.00	x	ØB 52.00	x	F 4.20
O-Ring Size	ID 50.39	x	C/S 3.53		
Lobe-Ring Size	ID 56.87	x	C/S 1.78		

63.00

Part No	PQD 0630 0475 063				
Groove Dimension	ØA 63.00	x	ØB 47.50	x	F 6.30
O-Ring Size	ID 46.99	x	C/S 5.33		
Lobe-Ring Size	ID 56.87	x	C/S 1.78		

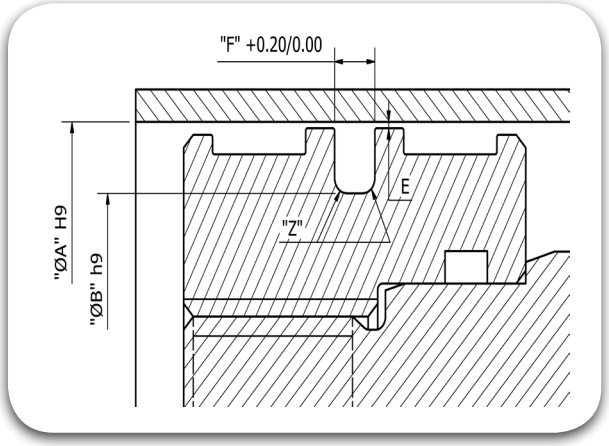

65.00

Part No	PQD 0650 0540 042					
Groove Dimension	ØA 65.00	x	ØB 54.00	x	F 4.20	
O-Ring Size	ID 53.57	x	C/S 3.53			
Lobe-Ring Size	ID 60.05	x	C/S 1.78			

70.00

Part No	PQD 0700 0590 042					
Groove Dimension	ØA 70.00	x	ØB 59.00	x	F 4.20	
O-Ring Size	ID 56.74	x	C/S 3.53			
Lobe-Ring Size	ID 63.22	x	C/S 1.78			

70.00

Part No	PQD 0700 0545 063					
Groove Dimension	ØA 70.00	x	ØB 54.50	x	F 6.30	
O-Ring Size	ID 53.34	x	C/S 5.33			
Lobe-Ring Size	ID 63.22	x	C/S 1.78			

75.00

Part No	PQD 0750 0640 042					
Groove Dimension	ØA 75.00	x	ØB 64.00	x	F 4.20	
O-Ring Size	ID 63.09	x	C/S 3.53			
Lobe-Ring Size	ID 69.57	x	C/S 1.78			

80.00

Part No	PQD 0800 0645 063					
Groove Dimension	ØA 80.00	x	ØB 64.50	x	F 6.30	
O-Ring Size	ID 53.34	x	C/S 5.33			
Lobe-Ring Size	ID 72.75	x	C/S 1.78			

80.00

Part No	PQD 0800 0590 081					
Groove Dimension	ØA 80.00	x	ØB 59.00	x	F 8.10	
O-Ring Size	ID 58.00	x	C/S 7.00			
Lobe-Ring Size	ID 71.12	x	C/S 2.62			

85.00

Part No	PQD 0850 0695 063					
Groove Dimension	ØA 85.00	x	ØB 69.50	x	F 6.30	
O-Ring Size	ID 69.22	x	C/S 5.33			
Lobe-Ring Size	ID 75.92	x	C/S 1.78			

85.00

Part No	PQD 0850 0640 081					
Groove Dimension	ØA 85.00	x	ØB 64.00	x	F 8.10	
O-Ring Size	ID 63.00	x	C/S 7.00			
Lobe-Ring Size	ID 75.87	x	C/S 2.62			

90.00

Part No	PQD 0900 0745 063					
Groove Dimension	ØA 90.00	x	ØB 74.50	x	F 6.30	
O-Ring Size	ID 72.39	x	C/S 5.33			
Lobe-Ring Size	ID 82.27	x	C/S 1.78			

90.00

Part No	PQD 0900 0690 081					
Groove Dimension	ØA 90.00	x	ØB 69.00	x	F 8.10	
O-Ring Size	ID 68.00	x	C/S 7.00			
Lobe-Ring Size	ID 82.22	x	C/S 2.62			

95.00

Part No	PQD 0950 0795 063
Groove Dimension	ØA 95.00 x ØB 79.50 x F 6.30
O-Ring Size	ID 78.74 x C/S 5.33
Lobe-Ring Size	ID 88.62 x C/S 1.78

95.00

Part No	PQD 0950 0740 081
Groove Dimension	ØA 95.00 x ØB 74.00 x F 8.10
O-Ring Size	ID 73.00 x C/S 7.00
Lobe-Ring Size	ID 82.22 x C/S 2.62

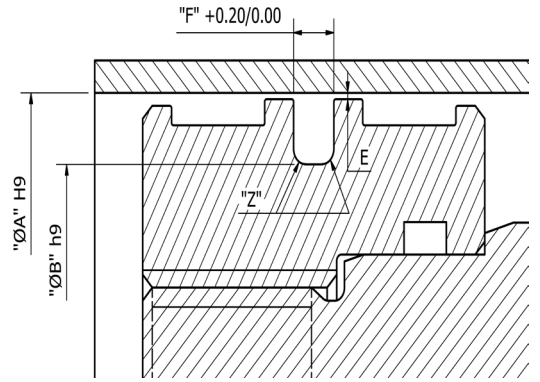

100.00

Part No	PQD 1000 0845 063
Groove Dimension	ØA 100.00 x ØB 84.50 x F 6.30
O-Ring Size	ID 81.92 x C/S 5.33
Lobe-Ring Size	ID 88.62 x C/S 1.78

100.00

Part No	PQD 1000 0790 081
Groove Dimension	ØA 100.00 x ØB 79.00 x F 8.10
O-Ring Size	ID 78.00 x C/S 7.00
Lobe-Ring Size	ID 88.57 x C/S 2.62

105.00

Part No	PQD 1050 0895 063
Groove Dimension	ØA 105.00 x ØB 89.50 x F 6.30
O-Ring Size	ID 88.27 x C/S 5.33
Lobe-Ring Size	ID 94.97 x C/S 1.78

105.00

Part No	PQD 1050 0840 081
Groove Dimension	ØA 105.00 x ØB 84.00 x F 8.10
O-Ring Size	ID 83.00 x C/S 7.00
Lobe-Ring Size	ID 94.92 x C/S 2.62

110.00

Part No	PQD 1100 0945 063
Groove Dimension	ØA 110.00 x ØB 94.50 x F 6.30
O-Ring Size	ID 91.44 x C/S 5.33
Lobe-Ring Size	ID 101.32 x C/S 1.78

110.00

Part No	PQD 1100 0890 081
Groove Dimension	ØA 110.00 x ØB 89.00 x F 8.10
O-Ring Size	ID 88.00 x C/S 7.00
Lobe-Ring Size	ID 101.27 x C/S 2.62

115.00

Part No	PQD 1150 0995 063
Groove Dimension	ØA 115.00 x ØB 99.50 x F 6.30
O-Ring Size	ID 97.79 x C/S 5.33
Lobe-Ring Size	ID 107.67 x C/S 1.78

115.00

Part No	PQD 1150 0940 081
Groove Dimension	ØA 115.00 x ØB 94.00 x F 8.10
O-Ring Size	ID 93.00 x C/S 7.00
Lobe-Ring Size	ID 107.62 x C/S 2.62

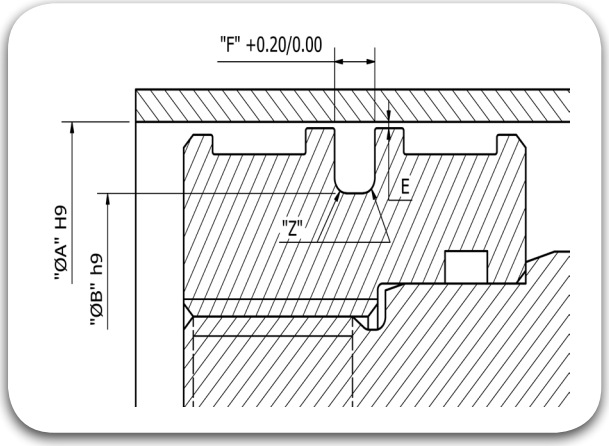

120.00

Part No	PQD 1200 1045 063		
Groove Dimension	ØA 120.00	ØB 104.50	F 6.30
O-Ring Size	ID 100.9	C/S 5.33	
Lobe-Ring Size	ID 114.02	C/S 1.78	

120.00

Part No	PQD 1200 0990 081		
Groove Dimension	ØA 120.00	ØB 99.00	F 8.10
O-Ring Size	ID 98.00	C/S 7.00	
Lobe-Ring Size	ID 107.62	C/S 2.62	

125.00

Part No	PQD 1250 1095 063		
Groove Dimension	ØA 125.00	ØB 109.50	F 6.30
O-Ring Size	ID 107.32	C/S 5.33	
Lobe-Ring Size	ID 114.02	C/S 1.78	

125.00

Part No	PQD 1250 1040 081		
Groove Dimension	ØA 125.00	ØB 104.00	F 8.10
O-Ring Size	ID 103.00	C/S 7.00	
Lobe-Ring Size	ID 113.97	C/S 2.62	

130.00

Part No	PQD 1300 1145 063		
Groove Dimension	ØA 130.00	ØB 114.50	F 6.30
O-Ring Size	ID 113.67	C/S 7.00	
Lobe-Ring Size	ID 120.37	C/S 1.78	

130.00

Part No	PQD 1300 1090 081		
Groove Dimension	ØA 130.00	ØB 109.00	F 8.10
O-Ring Size	ID 108.00	C/S 7.00	
Lobe-Ring Size	ID 120.32	C/S 2.62	

135.00

Part No	PQD 1350 1140 081		
Groove Dimension	ØA 135.00	ØB 114.00	F 8.10
O-Ring Size	ID 113.67	C/S 7.00	
Lobe-Ring Size	ID 126.67	C/S 2.62	

140.00

Part No	PQD 1400 1190 081		
Groove Dimension	ØA 140.00	ØB 119.00	F 8.10
O-Ring Size	ID 116.84	C/S 7.00	
Lobe-Ring Size	ID 126.67	C/S 2.62	

150.00

Part No	PQD 1500 1290 081		
Groove Dimension	ØA 150.00	ØB 129.00	F 8.10
O-Ring Size	ID 126.37	C/S 7.00	
Lobe-Ring Size	ID 139.37	C/S 2.62	

160.00

Part No	PQD 1600 1390 081		
Groove Dimension	ØA 160.00	ØB 139.00	F 8.10
O-Ring Size	ID 135.89	C/S 7.00	
Lobe-Ring Size	ID 145.72	C/S 2.62	

170.00

Part No	PQD 1700 1490 081					
Groove Dimension	ØA	x	ØB	x	F	
	170.00		149.00		8.10	
O-Ring Size	ID	145.42	x	C/S	7.00	
Lobe-Ring Size	ID	158.42	x	C/S	2.62	

180.00

Part No	PQD 1800 1590 081					
Groove Dimension	ØA	x	ØB	x	F	
	180.00		159.00		8.10	
O-Ring Size	ID	158.12	x	C/S	7.00	
Lobe-Ring Size	ID	171.11	x	C/S	2.62	

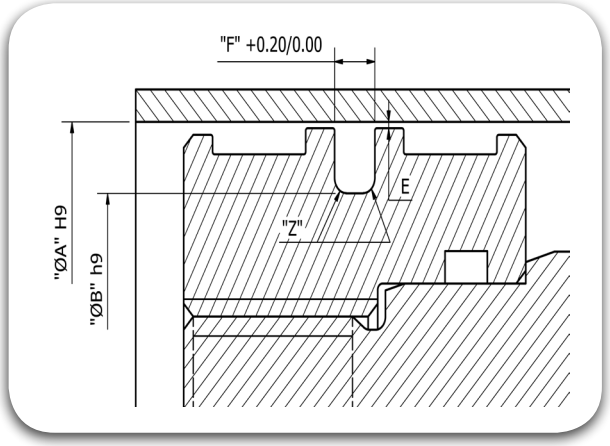

190.00

Part No	PQD 1900 1690 081					
Groove Dimension	ØA	x	ØB	x	F	
	190.00		169.00		8.10	
O-Ring Size	ID	164.47	x	C/S	7.00	
Lobe-Ring Size	ID	177.47	x	C/S	2.62	

200.00

Part No	PQD 2000 1790 081					
Groove Dimension	ØA	x	ØB	x	F	
	200.00		179.00		8.10	
O-Ring Size	ID	177.17	x	C/S	7.00	
Lobe-Ring Size	ID	190.17	x	C/S	2.62	

210.00

Part No	PQD 2100 1890 081					
Groove Dimension	ØA	x	ØB	x	F	
	210.00		189.00		8.10	
O-Ring Size	ID	183.52	x	C/S	7.00	
Lobe-Ring Size	ID	196.52	x	C/S	2.62	

220.00

Part No	PQD 2200 1990 081					
Groove Dimension	ØA	x	ØB	x	F	
	220.00		199.00		8.10	
O-Ring Size	ID	196.22	x	C/S	7.00	
Lobe-Ring Size	ID	202.87	x	C/S	2.62	

230.00

Part No	PQD 2300 2090 081					
Groove Dimension	ØA	x	ØB	x	F	
	230.00		209.00		8.10	
O-Ring Size	ID	208.92	x	C/S	7.00	
Lobe-Ring Size	ID	215.57	x	C/S	2.62	

240.00

Part No	PQD 2400 2190 081					
Groove Dimension	ØA	x	ØB	x	F	
	240.00		219.00		8.10	
O-Ring Size	ID	215.27	x	C/S	7.00	
Lobe-Ring Size	ID	221.92	x	C/S	2.62	

250.00

Part No	PQD 2500 2290 081					
Groove Dimension	ØA	x	ØB	x	F	
	250.00		229.00		8.10	
O-Ring Size	ID	227.97	x	C/S	7.00	
Lobe-Ring Size	ID	234.62	x	C/S	2.62	

250.00

Part No	PQD 2500 2250 081					
Groove Dimension	ØA	x	ØB	x	F	
	250.00		225.50		8.10	
O-Ring Size	ID	227.97	x	C/S	7.00	
Lobe-Ring Size	ID	234.62	x	C/S	2.62	

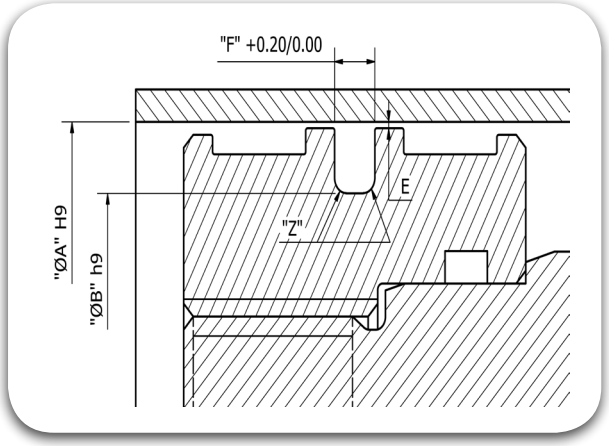

280.00

Part No	PQD 2800 2520 095		
Groove Dimension	ØA 280.00	ØB 252.00	F 9.50
O-Ring Size	ID 250.00	C/S 8.40	
Lobe-Ring Size	ID 266.29	C/S 3.53	

300.00

Part No	PQD 3000 2720 095		
Groove Dimension	ØA 300.00	ØB 272.00	F 9.50
O-Ring Size	ID 270.00	C/S 8.40	
Lobe-Ring Size	ID 278.99	C/S 3.53	

310.00

Part No	PQD 3100 2820 095		
Groove Dimension	ØA 310.00	ØB 282.00	F 9.50
O-Ring Size	ID 280.00	C/S 8.40	
Lobe-Ring Size	ID 291.69	C/S 3.53	

320.00

Part No	PQD 3200 2920 095		
Groove Dimension	ØA 320.00	ØB 292.00	F 9.50
O-Ring Size	ID 290.00	C/S 8.40	
Lobe-Ring Size	ID 304.39	C/S 3.53	

350.00

Part No	PQD 3500 3220 095		
Groove Dimension	ØA 350.00	ØB 322.00	F 9.50
O-Ring Size	ID 320.00	C/S 8.40	
Lobe-Ring Size	ID 329.79	C/S 3.53	

400.00

Part No	PQD 4000 3720 095		
Groove Dimension	ØA 400.00	ØB 372.00	F 9.50
O-Ring Size	ID 370.00	C/S 8.40	
Lobe-Ring Size	ID 380.59	C/S 3.53	

420.00

Part No	PQD 4200 3930 095		
Groove Dimension	ØA 420.00	ØB 392.00	F 9.50
O-Ring Size	ID 390.00	C/S 8.40	
Lobe-Ring Size	ID 380.59	C/S 3.53	

450.00

Part No	PQD 4500 4220 095		
Groove Dimension	ØA 450.00	ØB 422.00	F 9.50
O-Ring Size	ID 420.00	C/S 8.40	
Lobe-Ring Size	ID 430.66	C/S 3.53	

480.00

Part No	PQD 4800 4450 115		
Groove Dimension	ØA 480.00	ØB 445.00	F 11.50
O-Ring Size	ID 444.00	C/S 10.00	
Lobe-Ring Size	ID 456.06	C/S 5.33	

500.00

Part No	PQD 5000 4650 115		
Groove Dimension	ØA 500.00	ØB 465.00	F 11.50
O-Ring Size	ID 464.00	C/S 10.00	
Lobe-Ring Size	ID 456.06	C/S 5.33	

600.00

Part No	PQD 6000 5650 115				
Groove Dimension	ØA	x	ØB	x	F
	600.00		565.00		11.50
O-Ring Size	ID 564.00	x	C/S 10.00		
Lobe-Ring Size	ID 557.58	x	C/S 5.33		

700.00

Part No	PQD 7000 6650 115				
Groove Dimension	ØA	x	ØB	x	F
	700.00		665.00		11.50
O-Ring Size	ID 664.00	x	C/S 10.00		
Lobe-Ring Size	ID 658.88	x	C/S 5.33		

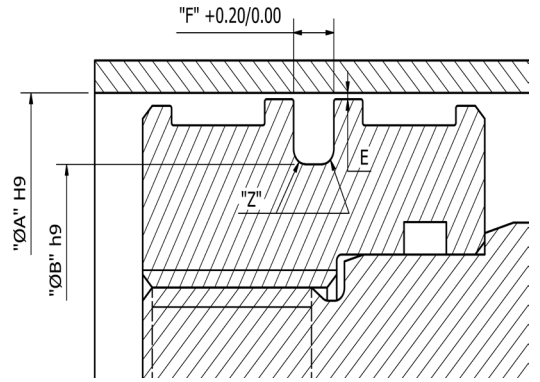

Piston Seals

PQE

TRIADA
TECHNOLOGIES

#SealingExcellence




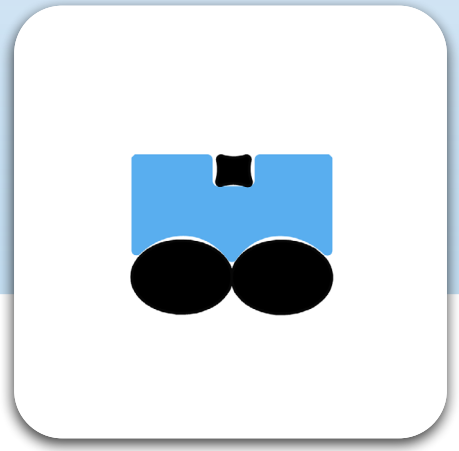

Description

The PQE is a Double Acting Seal made of four sealing elements, the dynamic seal being a ring in TRIALON® (filled PTFE) with the TRIAFLEX® (Lobe Ring), which arrests the movement of fluid through a seal with a very low friction, while the static sealing is through two TRIAFLEX® (O-Rings), also acting as an energizer to improve the efficiency. Presence of two O-Rings provides improved static sealing as well as better stability for the seal. Depending on the application, media, cycle speed etc., the PTFE compound is selected and the O-Ring & Lobe Ring compound is selected considering the media compatibility, temperature etc.



Diameter Range	Ø16.00 – Ø700.00
Standard material	TRIALON® T415 (Bronze Filled PTFE) with Energiser & Lobe ring in TRIAFLEX® T571 (NBR 70 Shores) (Other Compounds available, so as to suit the Application Conditions).
Temperature(°C)	-40ºC to 200ºC (Based on Elastomer Material).
Speed	≤ 2.00 m/s
Fluids	Hydraulic fluids (Mineral Oil based), Water, Air etc, depending on Seal Compounds selected.
Pressure	≤ 400 bar

Material Details

Seal Material	Seal Material Code	O-Ring / Lobe Ring Material	O-Ring / Lobe Ring Material / Code
TRIALON® Bronze Filled PTFE	T415	TRIAFLEX® NBR 70	N (T571)
TRIALON® Carbon Filled PTFE	T417	TRIAFLEX® FKM 75	F (T675)
		TRIAFLEX® EPDM 70	E (T771)
		TRIAFLEX® HNBR 70	H (T531)

Nomenclature

Part No	PQE	0160	0050	042	T415	N
	Seal profile	Bore Dia x 10	Groove Dia x 10	Groove Width x 10	Seal Material Code	O-Ring / Lobe Ring Material Code

Groove Details

Bore Diameter "A" H9	Radius	Radial Clearance "E" max			
Standard Range	"Z" max	<20 bar	<100 bar	<200 bar	<400 bar
6.00 - 13.90	0.20	0.20	0.10	0.08	0.05
14.00 - 24.90	0.40	0.25	0.15	0.10	0.07
25.00 - 45.90	0.60	0.35	0.20	0.15	0.08
46.00 - 124.90	1.00	0.50	0.25	0.20	0.10
125.00 - 999.90	1.40	0.60	0.30	0.25	0.12
1000.00 - 2700.00	2.00	0.90	0.50	0.40	0.20

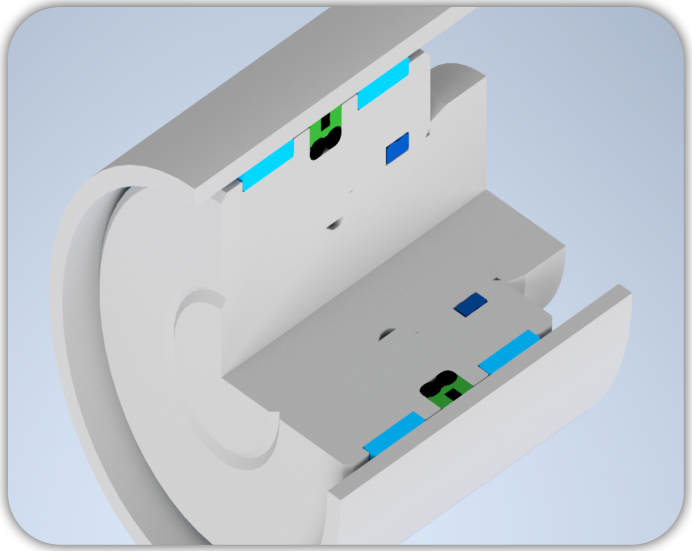

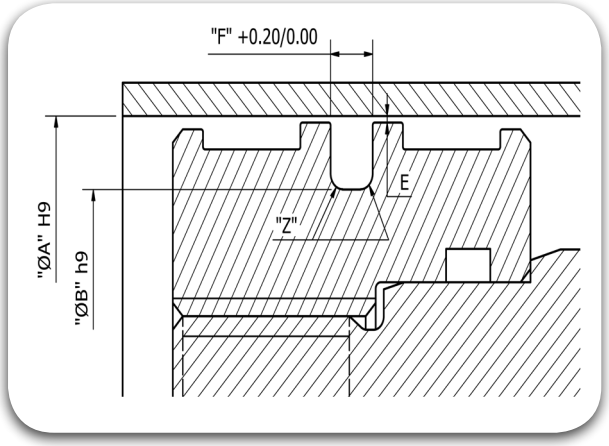

40.00

Part No	PQE 0400 0300 063					
Groove Dimension	ØA 40.00	x	ØB 30.00	x	F 6.30	
O-Ring Size	ID 29.82	x	C/S 2.62			
Lobe-Ring Size	ID 34.65	x	C/S 1.78			

42.00

Part No	PQE 0420 0320 063					
Groove Dimension	ØA 42.00	x	ØB 32.00	x	F 6.30	
O-Ring Size	ID 31.42	x	C/S 2.62			
Lobe-Ring Size	ID 37.82	x	C/S 1.78			

45.00

Part No	PQE 0450 0350 063					
Groove Dimension	ØA 45.00	x	ØB 35.00	x	F 6.30	
O-Ring Size	ID 34.59	x	C/S 2.62			
Lobe-Ring Size	ID 37.82	x	C/S 1.78			

48.00

Part No	PQE 0480 0380 063					
Groove Dimension	ØA 48.00	x	ØB 38.00	x	F 6.30	
O-Ring Size	ID 37.77	x	C/S 2.62			
Lobe-Ring Size	ID 41.00	x	C/S 1.78			

50.00

Part No	PQE 0500 0400 063					
Groove Dimension	ØA 50.00	x	ØB 40.00	x	F 6.30	
O-Ring Size	ID 39.34	x	C/S 2.62			
Lobe-Ring Size	ID 44.17	x	C/S 1.78			

52.00

Part No	PQE 0520 0420 063					
Groove Dimension	ØA 52.00	x	ØB 42.00	x	F 6.30	
O-Ring Size	ID 40.94	x	C/S 2.62			
Lobe-Ring Size	ID 47.35	x	C/S 1.78			

55.00

Part No	PQE 0550 0450 063					
Groove Dimension	ØA 55.00	x	ØB 45.00	x	F 6.30	
O-Ring Size	ID 44.12	x	C/S 2.62			
Lobe-Ring Size	ID 50.52	x	C/S 1.78			

60.00

Part No	PQE 0600 0500 063					
Groove Dimension	ØA 60.00	x	ØB 50.00	x	F 6.30	
O-Ring Size	ID 48.90	x	C/S 2.62			
Lobe-Ring Size	ID 53.70	x	C/S 1.78			

63.00

Part No	PQE 0630 0530 063					
Groove Dimension	ØA 63.00	x	ØB 53.00	x	F 6.30	
O-Ring Size	ID 52.07	x	C/S 2.62			
Lobe-Ring Size	ID 56.87	x	C/S 1.78			

65.00

Part No	PQE 0650 0550 063					
Groove Dimension	ØA 65.00	x	ØB 55.00	x	F 6.30	
O-Ring Size	ID 53.64	x	C/S 2.62			
Lobe-Ring Size	ID 60.05	x	C/S 1.78			

70.00

Part No	PQE 0700 0600 063
Groove Dimension	ØA 70.00 x ØB 60.00 x F 6.30
O-Ring Size	ID 58.42 x C/S 2.62
Lobe-Ring Size	ID 63.22 x C/S 1.78

75.00

Part No	PQE 0750 0650 063
Groove Dimension	ØA 75.00 x ØB 65.00 x F 6.30
O-Ring Size	ID 63.17 x C/S 2.62
Lobe-Ring Size	ID 69.57 x C/S 1.78

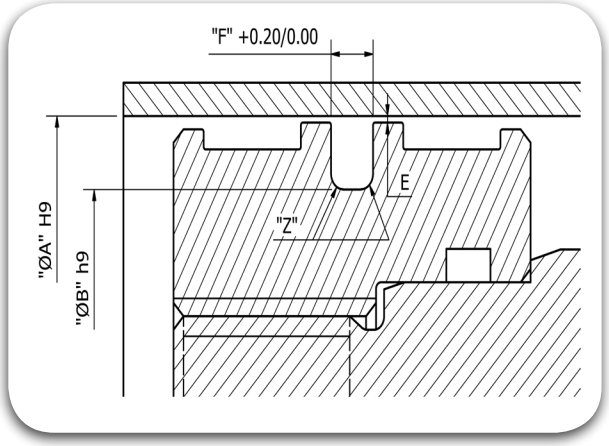

80.00

Part No	PQE 0800 0670 083
Groove Dimension	ØA 80.00 x ØB 67.00 x F 8.30
O-Ring Size	ID 66.27 x C/S 3.53
Lobe-Ring Size	ID 71.12 x C/S 1.78

85.00

Part No	PQE 0850 0720 083
Groove Dimension	ØA 85.00 x ØB 72.00 x F 8.30
O-Ring Size	ID 69.44 x C/S 3.53
Lobe-Ring Size	ID 75.87 x C/S 2.62

90.00

Part No	PQE 0900 0770 083
Groove Dimension	ØA 90.00 x ØB 77.00 x F 8.30
O-Ring Size	ID 75.79 x C/S 3.53
Lobe-Ring Size	ID 82.22 x C/S 2.62

95.00

Part No	PQE 0950 0820 083
Groove Dimension	ØA 95.00 x ØB 82.00 x F 8.30
O-Ring Size	ID 78.97 x C/S 3.53
Lobe-Ring Size	ID 82.22 x C/S 2.62

100.00

Part No	PQE 1000 0870 083
Groove Dimension	ØA 100.00 x ØB 87.00 x F 8.30
O-Ring Size	ID 85.32 x C/S 3.53
Lobe-Ring Size	ID 88.57 x C/S 2.62

105.00

Part No	PQE 1050 0920 083
Groove Dimension	ØA 105.00 x ØB 92.00 x F 8.30
O-Ring Size	ID 91.67 x C/S 3.53
Lobe-Ring Size	ID 94.92 x C/S 2.62

110.00

Part No	PQE 1100 0970 083
Groove Dimension	ØA 110.00 x ØB 97.00 x F 8.30
O-Ring Size	ID 94.84 x C/S 3.53
Lobe-Ring Size	ID 101.27 x C/S 2.62

115.00

Part No	PQE 1150 1020 083
Groove Dimension	ØA 115.00 x ØB 102.00 x F 8.30
O-Ring Size	ID 101.19 x C/S 3.53
Lobe-Ring Size	ID 107.62 x C/S 2.62

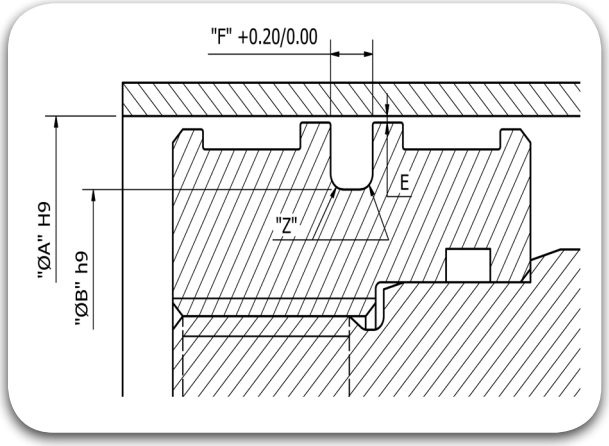

120.00

Part No	PQE 1200 1070 083					
Groove Dimension	ØA 120.00	x	ØB 107.00	x	F 8.30	
O-Ring Size	ID 104.37	x	C/S 3.53			
Lobe-Ring Size	ID 107.62	x	C/S 2.62			

125.00

Part No	PQE 1250 1120 083					
Groove Dimension	ØA 125.00	x	ØB 112.00	x	F 8.30	
O-Ring Size	ID 110.72	x	C/S 3.53			
Lobe-Ring Size	ID 113.97	x	C/S 2.62			

130.00

Part No	PQE 1300 1170 083					
Groove Dimension	ØA 130.00	x	ØB 117.00	x	F 8.30	
O-Ring Size	ID 113.89	x	C/S 3.53			
Lobe-Ring Size	ID 120.32	x	C/S 2.62			

135.00

Part No	PQE 1350 1170 123					
Groove Dimension	ØA 135.00	x	ØB 117.00	x	F 12.30	
O-Ring Size	ID 113.67	x	C/S 5.33			
Lobe-Ring Size	ID 123.42	x	C/S 3.53			

140.00

Part No	PQE 1400 1220 123					
Groove Dimension	ØA 140.00	x	ØB 122.00	x	F 12.30	
O-Ring Size	ID 120.02	x	C/S 5.33			
Lobe-Ring Size	ID 126.60	x	C/S 3.53			

150.00

Part No	PQE 1500 1320 123					
Groove Dimension	ØA 150.00	x	ØB 132.00	x	F 12.30	
O-Ring Size	ID 129.54	x	C/S 5.33			
Lobe-Ring Size	ID 136.12	x	C/S 3.53			

160.00

Part No	PQE 1600 1420 123					
Groove Dimension	ØA 160.00	x	ØB 142.00	x	F 12.30	
O-Ring Size	ID 139.07	x	C/S 5.33			
Lobe-Ring Size	ID 145.65	x	C/S 3.53			

170.00

Part No	PQE 1700 1520 123					
Groove Dimension	ØA 170.00	x	ØB 152.00	x	F 12.30	
O-Ring Size	ID 148.49	x	C/S 5.33			
Lobe-Ring Size	ID 158.35	x	C/S 3.53			

180.00

Part No	PQE 1800 1620 123					
Groove Dimension	ØA 180.00	x	ØB 162.00	x	F 12.30	
O-Ring Size	ID 158.12	x	C/S 5.33			
Lobe-Ring Size	ID 164.70	x	C/S 3.53			

190.00

Part No	PQE 1900 1720 123					
Groove Dimension	ØA 190.00	x	ØB 172.00	x	F 12.30	
O-Ring Size	ID 170.82	x	C/S 5.33			
Lobe-Ring Size	ID 177.40	x	C/S 3.53			

200.00

Part No	PQE 2000 1820 123					
Groove Dimension	ØA	x	ØB	x	F	
	200.00		182.00		12.30	
O-Ring Size	ID	177.17	x	C/S	5.33	
Lobe-Ring Size	ID	183.75	x	C/S	3.53	

210.00

Part No	PQE 2100 1920 123					
Groove Dimension	ØA	x	ØB	x	F	
	210.00		192.00		12.30	
O-Ring Size	ID	189.87	x	C/S	5.33	
Lobe-Ring Size	ID	196.45	x	C/S	3.53	

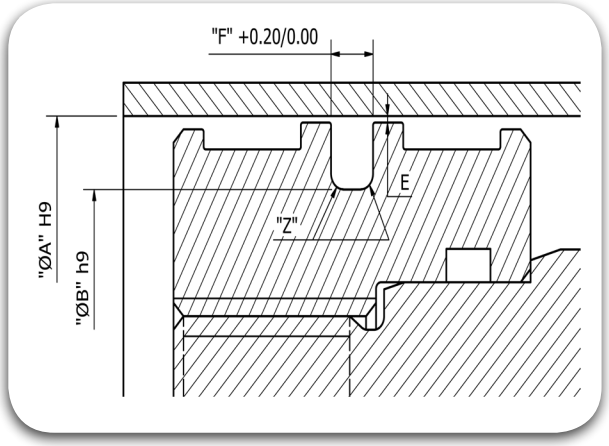

220.00

Part No	PQE 2200 2020 123					
Groove Dimension	ØA	x	ØB	x	F	
	220.00		202.00		12.30	
O-Ring Size	ID	196.22	x	C/S	5.33	
Lobe-Ring Size	ID	202.80	x	C/S	3.53	

230.00

Part No	PQE 2300 2120 123					
Groove Dimension	ØA	x	ØB	x	F	
	230.00		212.00		12.30	
O-Ring Size	ID	208.92	x	C/S	5.33	
Lobe-Ring Size	ID	215.50	x	C/S	3.53	

240.00

Part No	PQE 2400 2220 123					
Groove Dimension	ØA	x	ØB	x	F	
	240.00		222.00		12.30	
O-Ring Size	ID	221.62	x	C/S	5.33	
Lobe-Ring Size	ID	221.85	x	C/S	3.53	

250.00

Part No	PQE 2500 2320 123					
Groove Dimension	ØA	x	ØB	x	F	
	250.00		232.00		12.30	
O-Ring Size	ID	227.97	x	C/S	5.33	
Lobe-Ring Size	ID	234.55	x	C/S	3.53	

280.00

Part No	PQE 2800 2620 123					
Groove Dimension	ØA	x	ØB	x	F	
	280.00		262.00		12.30	
O-Ring Size	ID	253.37	x	C/S	5.33	
Lobe-Ring Size	ID	266.29	x	C/S	3.53	

300.00

Part No	PQE 3000 2820 123					
Groove Dimension	ØA	x	ØB	x	F	
	300.00		282.00		12.30	
O-Ring Size	ID	278.77	x	C/S	5.33	
Lobe-Ring Size	ID	278.99	x	C/S	3.53	

320.00

Part No	PQE 3200 3020 123					
Groove Dimension	ØA	x	ØB	x	F	
	320.00		302.00		12.30	
O-Ring Size	ID	291.47	x	C/S	5.33	
Lobe-Ring Size	ID	304.39	x	C/S	3.53	

350.00

Part No	PQE 3500 3320 123					
Groove Dimension	ØA	x	ØB	x	F	
	350.00		332.00		12.30	
O-Ring Size	ID	329.57	x	C/S	5.33	
Lobe-Ring Size	ID	329.79	x	C/S	3.53	

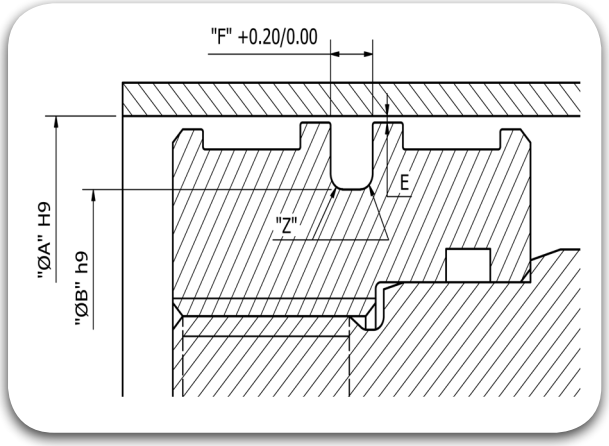

400.00

Part No	PQE 4000 3820 123					
Groove Dimension	ØA 400.00	x	ØB 382.00	x	F 12.30	
O-Ring Size	ID 380.37	x	C/S 5.33			
Lobe-Ring Size	ID 380.59	x	C/S 3.53			

420.00

Part No	PQE 4200 4020 123					
Groove Dimension	ØA 420.00	x	ØB 402.00	x	F 12.30	
O-Ring Size	ID 405.26	x	C/S 5.33			
Lobe-Ring Size	ID 380.59	x	C/S 3.53			

450.00

Part No	PQE 4500 4320 123					
Groove Dimension	ØA 450.00	x	ØB 432.00	x	F 12.30	
O-Ring Size	ID 430.66	x	C/S 5.33			
Lobe-Ring Size	ID 430.66	x	C/S 3.53			

480.00

Part No	PQE 4800 4490 163					
Groove Dimension	ØA 480.00	x	ØB 449.00	x	F 16.30	
O-Ring Size	ID 443.36	x	C/S 7.00			
Lobe-Ring Size	ID 456.06	x	C/S 3.53			

500.00

Part No	PQE 5000 4690 163					
Groove Dimension	ØA 500.00	x	ØB 469.00	x	F 16.30	
O-Ring Size	ID 468.76	x	C/S 7.00			
Lobe-Ring Size	ID 456.06	x	C/S 3.53			

600.00

Part No	PQE 6000 5690 163					
Groove Dimension	ØA 600.00	x	ØB 569.00	x	F 16.30	
O-Ring Size	ID 557.66	x	C/S 7.00			
Lobe-Ring Size	ID 557.58	x	C/S 3.53			

700.00

Part No	PQE 7000 6690 163					
Groove Dimension	ØA 700.00	x	ØB 669.00	x	F 16.30	
O-Ring Size	ID 658.88	x	C/S 7.00			
Lobe-Ring Size	ID 658.88	x	C/S 3.53			

Piston Seals

PED

TRIADA
TECHNOLOGIES

#SealingExcellence


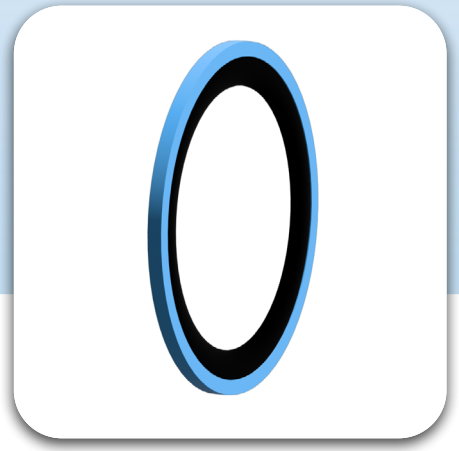

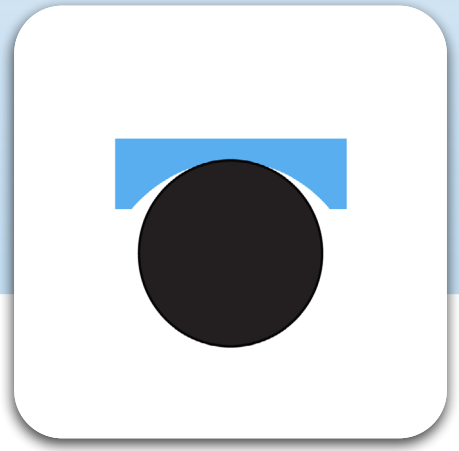

Description

The PED Seal is a bidirectional seal and composed of two elements. The dynamic seal is a ring in TRIALON® (filled PTFE) while the static seal is an TRIAFLEX® (O-Ring) also acting as energizer. Depending on the application, media, cycle speed etc., the PTFE compound is selected and the O-Ring compound is selected considering the media compatibility, temperature etc.

Diameter Range	Ø20.00 – Ø 2500.00
Standard material	TRIALON® T415 (Bronze Filled PTFE) with Energiser in TRIAFLEX® T571 (NBR 70 Shores) (Other Compounds available,so as to suit the Application Conditions).
Temperature(°C)	-40ºC to 200ºC (Based on Elastomer Material)
Speed	≤ 15.0 m/s
Fluids	Hydraulic fluids (Mineral Oil based), Water, Air etc depending on Seal Compounds selected
Pressure	≤ 350 bar



Material Details

Seal Material	Seal Material Code	O-Ring Material	O-Ring Material / Code
TRIALON® Bronze Filled PTFE	T415	TRIAFLEX® NBR 70	N (T571)
TRIALON® Carbon Filled PTFE	T417	TRIAFLEX® FKM 75	F (T675)
		TRIAFLEX® EPDM 70	E (T771)
		TRIAFLEX® HNBR 70	H (T531)

Nomenclature

Part No	PED	0240	0195	036	T415	N
	Seal profile	Bore Dia x 10	Groove Dia x 10	Groove Width x 10	Seal Material Code	O-Ring Material Code

Groove Details

Bore Diameter "A" H9	Radius	Radial Clearance "E" max			
Standard Range	"Z" max	<20 bar	<100 bar	<200 bar	<400 bar
5.00 - 13.90	0.40	0.10	0.10	0.08	0.05
14.00 - 24.90	0.40	0.15	0.15	0.10	0.07
25.00 - 45.90	0.60	0.25	0.20	0.15	0.08
46.00 - 124.90	0.80	0.35	0.25	0.20	0.10
125.00 - 999.90	1.00	0.60	0.40	0.30	0.20
1000.00 - 2700.00	2.00	0.90	0.60	0.50	0.25

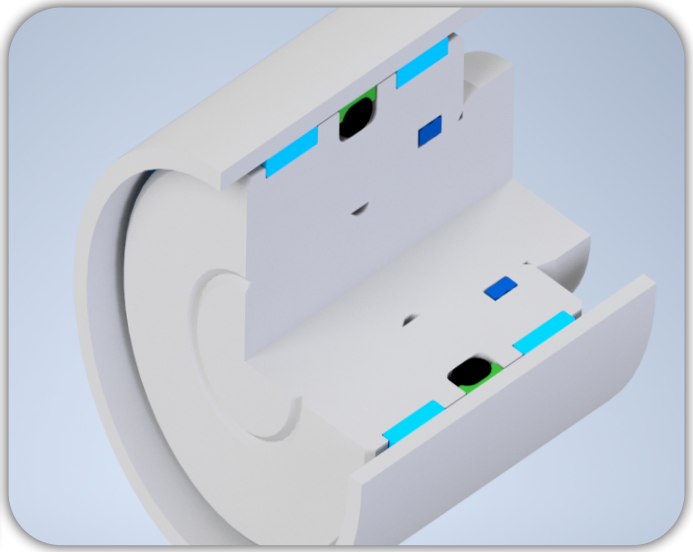

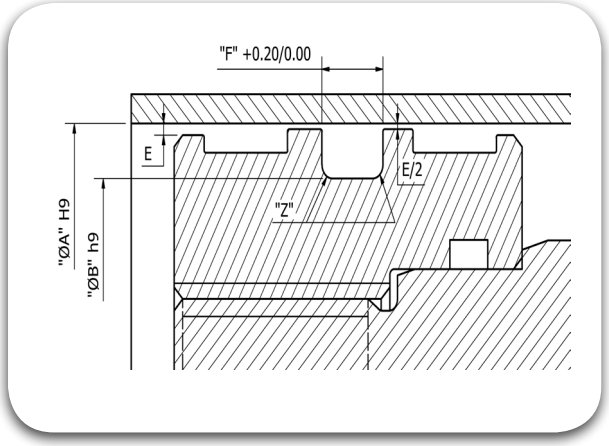

6.00

Part No	PED 0060 0031 024		
Groove Dimension	ØA 6.00	ØB 3.10	F 2.40
O-Ring Size	ID 2.57	C/S 1.78	

8.00

Part No	PED 0080 0051 024		
Groove Dimension	ØA 8.00	ØB 5.10	F 2.40
O-Ring Size	ID 4.47	C/S 1.78	

9.00

Part No	PED 0090 0061 024		
Groove Dimension	ØA 9.00	ØB 6.10	F 2.40
O-Ring Size	ID 5.28	C/S 1.78	

10.00

Part No	PED 0100 0071 024		
Groove Dimension	ØA 10.00	ØB 7.10	F 2.40
O-Ring Size	ID 6.07	C/S 1.78	

11.00

Part No	PED 0110 0081 024		
Groove Dimension	ØA 11.00	ØB 8.10	F 2.40
O-Ring Size	ID 7.65	C/S 1.78	

12.00

Part No	PED 0120 0091 024		
Groove Dimension	ØA 12.00	ØB 9.10	F 2.40
O-Ring Size	ID 8.50	C/S 1.80	

12.70

Part No	PED 0127 0098 024		
Groove Dimension	ØA 12.70	ØB 9.80	F 2.40
O-Ring Size	ID 9.25	C/S 1.78	

14.00

Part No	PED 0140 0095 036		
Groove Dimension	ØA 14.00	ØB 9.50	F 3.60
O-Ring Size	ID 9.19	C/S 2.62	

15.00

Part No	PED 0150 0105 036		
Groove Dimension	ØA 15.00	ØB 10.50	F 3.60
O-Ring Size	ID 9.19	C/S 2.62	

16.00

Part No	PED 0160 0115 036		
Groove Dimension	ØA 16.00	ØB 11.50	F 3.60
O-Ring Size	ID 10.77	C/S 2.62	

16.00

Part No	PED 0160 0135 036		
Groove Dimension	ØA 16.00	ØB 13.50	F 3.60
O-Ring Size	ID 12.37	C/S 2.62	

20.00

Part No	PED 0200 0155 036		
Groove Dimension	ØA 20.00	ØB 15.50	F 3.60
O-Ring Size	ID 13.94	C/S 2.62	

22.00

Part No	PED 0220 0175 036		
Groove Dimension	ØA 22.00	ØB 17.50	F 3.60
O-Ring Size	ID 17.12	C/S 2.62	

24.00

Part No	PED 0240 0195 036					
Groove Dimension	ØA	x	ØB	x	F	
	24.00		19.50		3.60	
O-Ring Size	ID	18.72	x	C/S	2.62	

25.00

Part No	PED 0250 0188 048					
Groove Dimension	ØA	x	ØB	x	F	
	25.00		18.80		4.80	
O-Ring Size	ID	18.00	x	C/S	3.55	

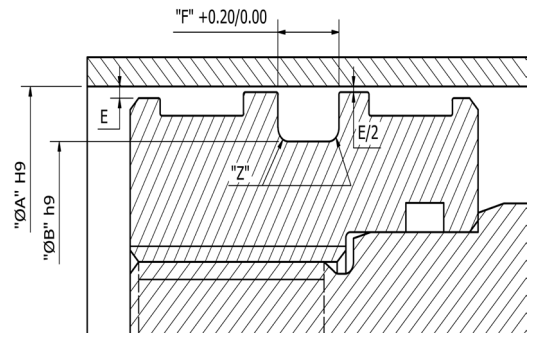

25.00

Part No	PED 0250 0192 048					
Groove Dimension	ØA	x	ØB	x	F	
	25.00		19.20		4.80	
O-Ring Size	ID	18.54	x	C/S	3.55	

27.00

Part No	PED 0270 0208 048					
Groove Dimension	ØA	x	ØB	x	F	
	27.00		20.80		4.80	
O-Ring Size	ID	20.22	x	C/S	3.55	

28.00

Part No	PED 0280 0218 048					
Groove Dimension	ØA	x	ØB	x	F	
	28.00		21.80		4.80	
O-Ring Size	ID	20.22	x	C/S	3.55	

30.00

Part No	PED 0300 0238 048					
Groove Dimension	ØA	x	ØB	x	F	
	30.00		23.80		4.80	
O-Ring Size	ID	23.40	x	C/S	3.55	

32.00

Part No	PED 0320 0258 048					
Groove Dimension	ØA	x	ØB	x	F	
	32.00		25.80		4.80	
O-Ring Size	ID	25.00	x	C/S	3.55	

35.00

Part No	PED 0350 0288 048					
Groove Dimension	ØA	x	ØB	x	F	
	35.00		28.80		4.80	
O-Ring Size	ID	28.17	x	C/S	3.55	

40.00

Part No	PED 0400 0338 048					
Groove Dimension	ØA	x	ØB	x	F	
	40.00		33.80		4.80	
O-Ring Size	ID	32.92	x	C/S	3.55	

42.00

Part No	PED 0420 0358 048					
Groove Dimension	ØA	x	ØB	x	F	
	42.00		35.80		4.80	
O-Ring Size	ID	34.52	x	C/S	3.55	

45.00

Part No	PED 0450 0388 048					
Groove Dimension	ØA	x	ØB	x	F	
	45.00		38.80		4.80	
O-Ring Size	ID	37.70	x	C/S	3.55	

48.00

Part No	PED 0480 0386 071					
Groove Dimension	ØA	x	ØB	x	F	
	48.00		38.60		7.10	
O-Ring Size	ID	37.47	x	C/S	5.33	

50.00

Part No	PED 0500 0406 071					
Groove Dimension	ØA	x	ØB	x	F	
	50.00		40.60		7.10	
O-Ring Size	ID	40.00	x	C/S	5.33	

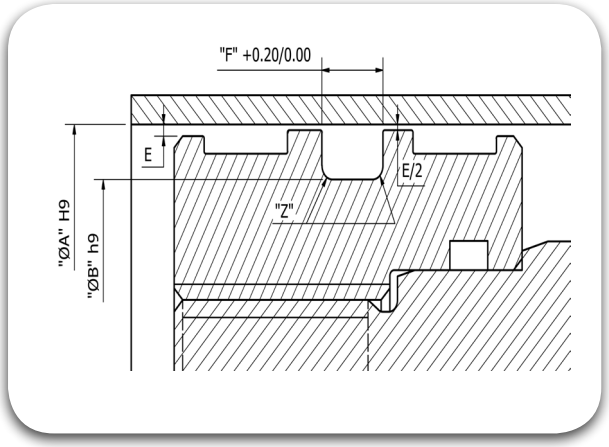

50.00

Part No	PED 0500 0414 071					
Groove Dimension	ØA	x	ØB	x	F	
	50.00		41.40		7.10	
O-Ring Size	ID	40.64	x	C/S	5.33	

52.00

Part No	PED 0520 0426 071					
Groove Dimension	ØA	x	ØB	x	F	
	52.00		42.60		7.10	
O-Ring Size	ID	40.64	x	C/S	5.33	

55.00

Part No	PED 0550 0456 071					
Groove Dimension	ØA	x	ØB	x	F	
	55.00		45.60		7.10	
O-Ring Size	ID	43.82	x	C/S	5.33	

56.00

Part No	PED 0560 0466 071					
Groove Dimension	ØA	x	ØB	x	F	
	56.00		46.60		7.10	
O-Ring Size	ID	43.82	x	C/S	5.33	

60.00

Part No	PED 0600 0506 071					
Groove Dimension	ØA	x	ØB	x	F	
	60.00		50.60		7.10	
O-Ring Size	ID	50.17	x	C/S	5.33	

63.00

Part No	PED 0630 0536 071					
Groove Dimension	ØA	x	ØB	x	F	
	63.00		53.60		7.10	
O-Ring Size	ID	53.34	x	C/S	5.33	

65.00

Part No	PED 0650 0556 071					
Groove Dimension	ØA	x	ØB	x	F	
	65.00		55.60		7.10	
O-Ring Size	ID	53.34	x	C/S	5.33	

70.00

Part No	PED 0700 0606 071					
Groove Dimension	ØA	x	ØB	x	F	
	70.00		60.60		7.10	
O-Ring Size	ID	59.69	x	C/S	5.33	

75.00

Part No	PED 0750 0656 071					
Groove Dimension	ØA	x	ØB	x	F	
	75.00		65.60		7.10	
O-Ring Size	ID	62.87	x	C/S	5.33	

80.00

Part No	PED 0800 0706 071					
Groove Dimension	ØA	x	ØB	x	F	
	80.00		70.60		7.10	
O-Ring Size	ID	69.22	x	C/S	5.33	

85.00

Part No	PED 0850 0756 071					
Groove Dimension	ØA	x	ØB	x	F	
	85.00		75.60		7.10	
O-Ring Size	ID	72.39	x	C/S	5.33	

90.00

Part No	PED 0900 0806 071					
Groove Dimension	ØA	x	ØB	x	F	
	90.00		80.60		7.10	
O-Ring Size	ID	78.74	x	C/S	5.33	

95.00

Part No	PED 0950 0856 071					
Groove Dimension	ØA	x	ØB	x	F	
	95.00		85.60		7.10	
O-Ring Size	ID	81.92	x	C/S	5.33	

100.00

Part No	PED 1000 0906 071					
Groove Dimension	ØA	x	ØB	x	F	
	100.00		90.60		7.10	
O-Ring Size	ID	88.27	x	C/S	5.33	

105.00

Part No	PED 1050 1006 071					
Groove Dimension	ØA	x	ØB	x	F	
	105.00		100.60		7.10	
O-Ring Size	ID	97.79	x	C/S	5.33	

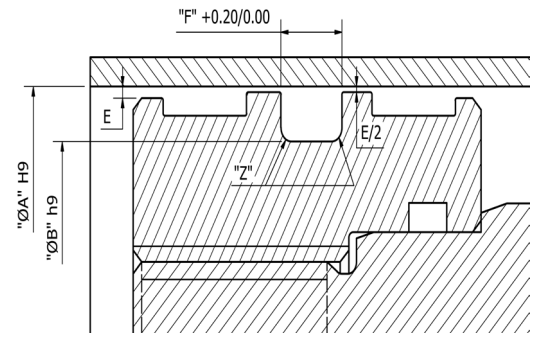

110.00

Part No	PED 1100 1056 071					
Groove Dimension	ØA	x	ØB	x	F	
	110.00		105.60		7.10	
O-Ring Size	ID	104.14	x	C/S	5.33	

115.00

Part No	PED 1150 1106 071					
Groove Dimension	ØA	x	ØB	x	F	
	115.00		110.60		7.10	
O-Ring Size	ID	107.32	x	C/S	5.33	

120.00

Part No	PED 1200 1128 095					
Groove Dimension	ØA	x	ØB	x	F	
	120.00		112.80		9.50	
O-Ring Size	ID	113.67	x	C/S	7.00	

125.00

Part No	PED 1250 1178 095					
Groove Dimension	ØA	x	ØB	x	F	
	125.00		117.80		9.50	
O-Ring Size	ID	116.84	x	C/S	7.00	

130.00

Part No	PED 1300 1228 095					
Groove Dimension	ØA	x	ØB	x	F	
	130.00		122.80		9.50	
O-Ring Size	ID	120.02	x	C/S	7.00	

135.00

Part No	PED 1350 1278 095					
Groove Dimension	ØA	x	ØB	x	F	
	135.00		127.80		9.50	
O-Ring Size	ID	126.37	x	C/S	7.00	

140.00

Part No	PED 1400 1378 095					
Groove Dimension	ØA	x	ØB	x	F	
	140.00		137.80		9.50	
O-Ring Size	ID	135.89	x	C/S	7.00	

150.00

Part No	PED 1500 1478 095					
Groove Dimension	ØA	x	ØB	x	F	
	150.00		147.80		9.50	
O-Ring Size	ID	145.42	x	C/S	7.00	

160.00

Part No	PED 1600 1578 095					
Groove Dimension	ØA	x	ØB	x	F	
	160.00		157.80		9.50	
O-Ring Size	ID	151.77	x	C/S	7.00	

170.00

Part No	PED 1700 1678 095					
Groove Dimension	ØA	x	ØB	x	F	
	170.00		167.80		9.50	
O-Ring Size	ID	164.47	x	C/S	7.00	

180.00

Part No	PED 1800 1778 095					
Groove Dimension	ØA	x	ØB	x	F	
	180.00		177.80		9.50	
O-Ring Size	ID	177.17	x	C/S	7.00	

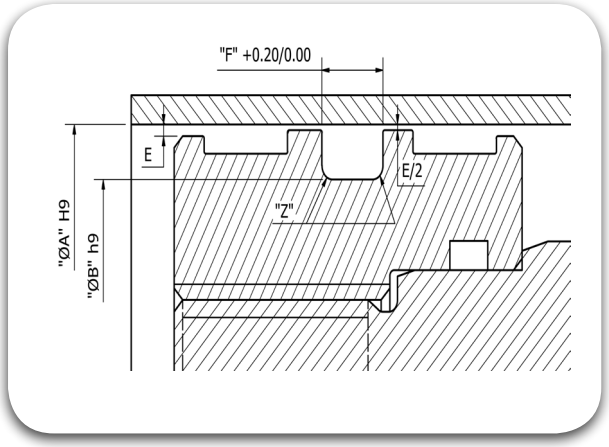

190.00

Part No	PED 1900 1878 095					
Groove Dimension	ØA	x	ØB	x	F	
	190.00		187.80		9.50	
O-Ring Size	ID	183.52	x	C/S	7.00	

200.00

Part No	PED 2000 1978 095					
Groove Dimension	ØA	x	ØB	x	F	
	200.00		197.80		9.50	
O-Ring Size	ID	196.22	x	C/S	7.00	

210.00

Part No	PED 2100 2078 095					
Groove Dimension	ØA	x	ØB	x	F	
	210.00		207.80		9.50	
O-Ring Size	ID	202.57	x	C/S	7.00	

220.00

Part No	PED 2200 2178 095					
Groove Dimension	ØA	x	ØB	x	F	
	220.00		217.80		9.50	
O-Ring Size	ID	215.27	x	C/S	7.00	

230.00

Part No	PED 2300 2278 095					
Groove Dimension	ØA	x	ØB	x	F	
	230.00		227.80		9.50	
O-Ring Size	ID	227.97	x	C/S	7.00	

240.00

Part No	PED 2400 2378 095					
Groove Dimension	ØA	x	ØB	x	F	
	240.00		237.80		9.50	
O-Ring Size	ID	236.00	x	C/S	7.00	

250.00

Part No	PED 2500 2678 095					
Groove Dimension	ØA	x	ØB	x	F	
	250.00		267.80		9.50	
O-Ring Size	ID	266.07	x	C/S	7.00	

280.00

Part No	PED 2800 2870 095					
Groove Dimension	ØA	x	ØB	x	F	
	280.00		287.80		9.50	
O-Ring Size	ID	278.77	x	C/S	7.00	

300.00

Part No	PED 3000 3078 095					
Groove Dimension	ØA	x	ØB	x	F	
	300.00		307.80		9.50	
O-Ring Size	ID	304.17	x	C/S	7.00	

320.00

Part No	PED 3200 3378 095					
Groove Dimension	ØA	x	ØB	x	F	
	320.00		337.80		9.50	
O-Ring Size	ID	329.57	x	C/S	7.00	

350.00

Part No	PED 3500 3878 095					
Groove Dimension	ØA	x	ØB	x	F	
	350.00		387.80		9.50	
O-Ring Size	ID	380.37	x	C/S	7.00	

400.00

Part No	PED 4000 4078 095					
Groove Dimension	ØA	x	ØB	x	F	
	400.00		407.80		9.50	
O-Ring Size	ID	405.26	x	C/S	7.00	

450.00

Part No	PED 4500 4378 095					
Groove Dimension	ØA	x	ØB	x	F	
	450.00		437.80		9.50	
O-Ring Size	ID	430.66	x	C/S	7.00	

480.00

Part No	PED 4800 4678 095
Groove Dimension	ØA 480.00 x ØB 467.80 x F 9.50
O-Ring Size	ID 456.06 x C/S 7.00

500.00

Part No	PED 5000 4878 095
Groove Dimension	ØA 500.00 x ØB 487.80 x F 9.50
O-Ring Size	ID 481.46 x C/S 7.00

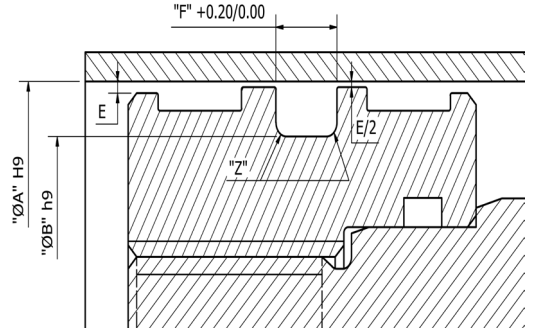

Piston Seals

PES

TRIADA
TECHNOLOGIES

#Sealing**Excellence**


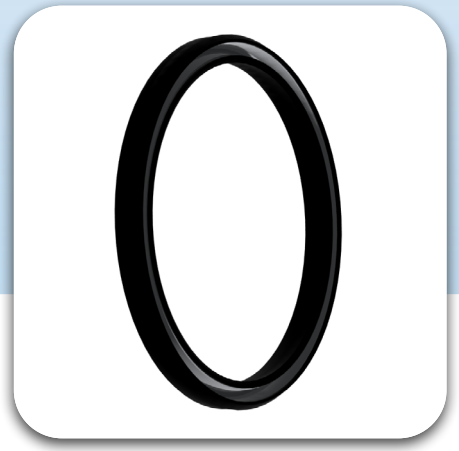



Description

The PES Seal is a unidirectional seal and composed of two elements. The U-Shaped dynamic seal is a ring in TRIALON® (filled PTFE) while the energizer is a cantilever or helical or slant coil spring. Depending on the application, media, cycle speed etc., the PTFE compound is selected. Lesser area of contact offers reduced wear, thus increasing the life of the Seal.

Diameter Range	Ø6.00 – Ø1500.00
Standard material	TRIALON® T415 (Bronze Filled PTFE) with Stainless Steel Cantilever Spring.
Temperature(°C)	-70ºC to 260ºC
Speed	≤ 15.0 m/s
Fluids	Hydraulic fluids (Mineral Oil based), Water, Air, Chemical & Gases etc depending on Seal Compounds selected.
Pressure	≤ 2000 bar

Reciprocating · Oscillating · Rotary · Helix · Static · Single Acting · Double Acting

Material Details

Seal Material	Seal Material Code	Spring Material Code	Spring Type Code
TRIALON® Bronze Filled PTFE	T415	S Stainless Steel	C Cantilever
TRIALON® Carbon Filled PTFE	T417	H Hastelloy	H Helical
		E Elgiloy	S Slant coil

Nomenclature

Part No	PES	0480	0386	071	T415	S	H
	Seal profile	Bore Dia x 10	Groove Dia x 10	Groove Width x 10	Seal Material Code	Spring Material Code	Spring Type Code

Groove Details

Bore Diameter "A" H9	Radial Clearance "E" max			
Standard Range	<20 bar	<100 bar	<200 bar	<400 bar
6.00 - 13.90	0.20	0.10	0.08	0.05
14.00 - 24.90	0.25	0.15	0.10	0.07
25.00 - 45.90	0.35	0.20	0.15	0.08
46.00 - 124.90	0.50	0.25	0.20	0.10
125.00 - 999.90	0.60	0.30	0.25	0.12
1000.00 - 2700.00	0.90	0.50	0.40	0.20

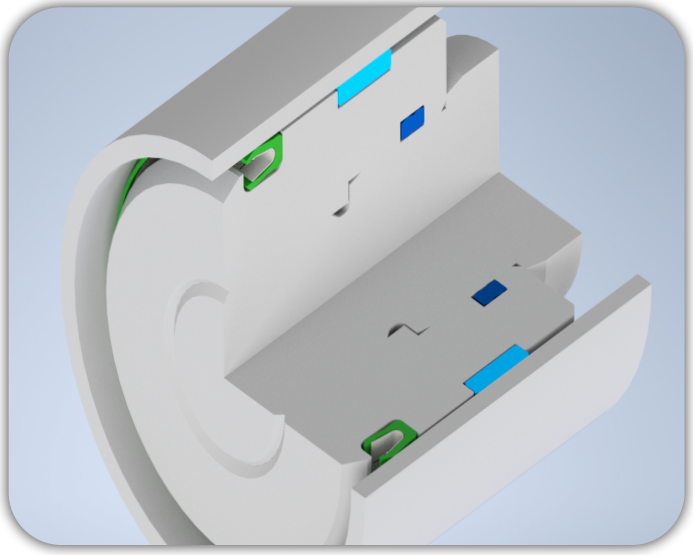

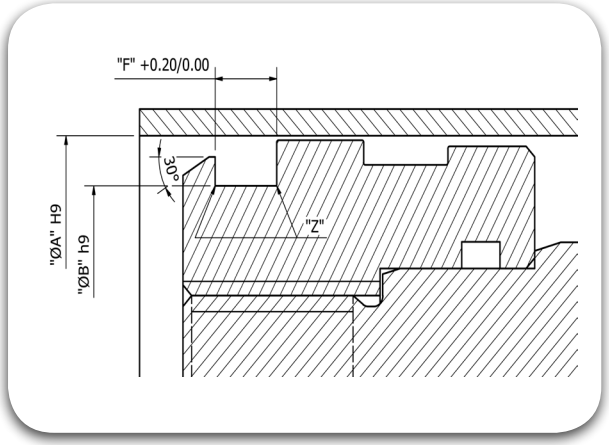

6.00

Part No	PES 0060 0031 024				
Groove Dimension	ØA	x	ØB	x	F
	6.00		3.10		2.40

8.00

Part No	PES 0080 0051 024				
Groove Dimension	ØA	x	ØB	x	F
	8.00		5.10		2.40

10.00

Part No	PES 0100 0071 024				
Groove Dimension	ØA	x	ØB	x	F
	10.00		7.10		2.40

12.00

Part No	PES 0120 0091 024				
Groove Dimension	ØA	x	ØB	x	F
	12.00		9.10		2.40

14.00

Part No	PES 0140 0095 036				
Groove Dimension	ØA	x	ØB	x	F
	14.00		9.50		3.60

15.00

Part No	PES 0150 0105 036				
Groove Dimension	ØA	x	ØB	x	F
	15.00		10.50		3.60

16.00

Part No	PES 0160 0115 036				
Groove Dimension	ØA	x	ØB	x	F
	16.00		11.50		3.60

18.00

Part No	PES 0180 0135 036				
Groove Dimension	ØA	x	ØB	x	F
	18.00		13.50		3.60

20.00

Part No	PES 0200 0155 036				
Groove Dimension	ØA	x	ØB	x	F
	20.00		15.50		3.60

22.00

Part No	PES 0220 0175 036				
Groove Dimension	ØA	x	ØB	x	F
	22.00		17.50		3.60

25.00

Part No	PES 0250 0188 048				
Groove Dimension	ØA	x	ØB	x	F
	25.00		18.80		4.80

28.00

Part No	PES 0280 0218 048				
Groove Dimension	ØA	x	ØB	x	F
	28.00		21.80		4.80

30.00

Part No	PES 0300 0238 048				
Groove Dimension	ØA	x	ØB	x	F
	30.00		23.80		4.80

32.00

		ØA		ØB		F
Part No	PES 0320 0258 048					
Groove Dimension		32.00	x	25.80	x	4.80

35.00

		ØA		ØB		F
Part No	PES 0350 0288 048					
Groove Dimension		35.00	x	28.80	x	4.80

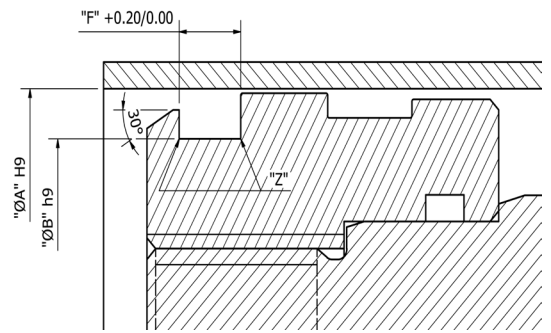

40.00

		ØA		ØB		F
Part No	PES 0400 0338 048					
Groove Dimension		40.00	x	33.80	x	4.80

42.00

		ØA		ØB		F
Part No	PES 0420 0358 048					
Groove Dimension		42.00	x	35.80	x	4.80

45.00

		ØA		ØB		F
Part No	PES 0450 0388 048					
Groove Dimension		45.00	x	38.80	x	4.80

48.00

		ØA		ØB		F
Part No	PES 0480 0386 071					
Groove Dimension		48.00	x	38.60	x	7.10

50.00

		ØA		ØB		F
Part No	PES 0500 0406 071					
Groove Dimension		50.00	x	40.60	x	7.10

52.00

		ØA		ØB		F
Part No	PES 0520 0426 071					
Groove Dimension		52.00	x	42.60	x	7.10

55.00

		ØA		ØB		F
Part No	PES 0550 0456 071					
Groove Dimension		55.00	x	45.60	x	7.10

56.00

		ØA		ØB		F
Part No	PES 0560 0466 071					
Groove Dimension		56.00	x	46.60	x	7.10

60.00

		ØA		ØB		F
Part No	PES 0600 0506 071					
Groove Dimension		60.00	x	50.60	x	7.10

63.00

		ØA		ØB		F
Part No	PES 0630 0536 071					
Groove Dimension		63.00	x	53.60	x	7.10

65.00

		ØA		ØB		F
Part No	PES 0650 0556 071					
Groove Dimension		65.00	x	55.60	x	7.10

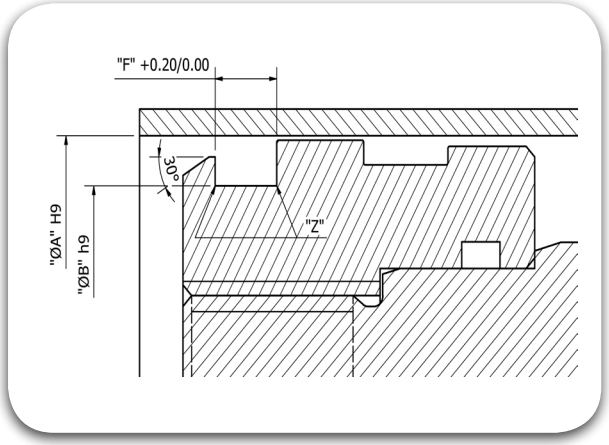

70.00

		ØA		ØB		F
Part No	PES 0700 0606 071					
Groove Dimension		70.00	x	60.60	x	7.10

75.00

		ØA		ØB		F
Part No	PES 0750 0656 071					
Groove Dimension		75.00	x	65.60	x	7.10

80.00

		ØA		ØB		F
Part No	PES 0800 0706 071					
Groove Dimension		80.00	x	70.60	x	7.10

85.00

		ØA		ØB		F
Part No	PES 0850 0756 071					
Groove Dimension		85.00	x	75.60	x	7.10

90.00

		ØA		ØB		F
Part No	PES 0900 0806 071					
Groove Dimension		90.00	x	80.60	x	7.10

95.00

		ØA		ØB		F
Part No	PES 0950 0856 071					
Groove Dimension		95.00	x	85.60	x	7.10

100.00

		ØA		ØB		F
Part No	PES 1000 0906 071					
Groove Dimension		100.00	x	90.60	x	7.10

105.00

		ØA		ØB		F
Part No	PES 1050 1006 071					
Groove Dimension		105.00	x	100.60	x	7.10

110.00

		ØA		ØB		F
Part No	PES 1100 1056 071					
Groove Dimension		110.00	x	105.60	x	7.10

115.00

		ØA		ØB		F
Part No	PES 1150 1106 071					
Groove Dimension		115.00	x	110.60	x	7.10

120.00

		ØA		ØB		F
Part No	PES 1200 1128 095					
Groove Dimension		120.00	x	112.80	x	9.50

125.00

		ØA		ØB		F
Part No	PES 1250 1178 095					
Groove Dimension		125.00	x	117.80	x	9.50

130.00

		ØA		ØB		F
Part No	PES 1300 1228 095					
Groove Dimension		130.00	x	122.80	x	9.50

135.00

Part No	PES 1350 1278 095
Groove Dimension	ØA 135.00 x ØB 127.80 x F 9.50

140.00

Part No	PES 1400 1378 095
Groove Dimension	ØA 140.00 x ØB 137.80 x F 9.50

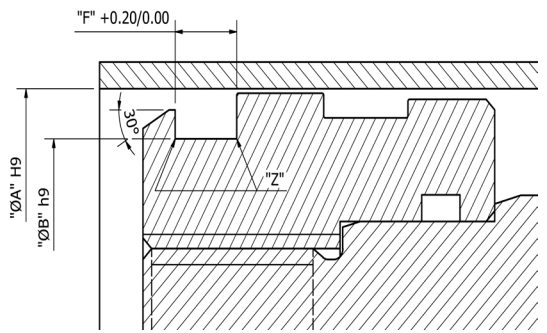

150.00

Part No	PES 1500 1478 095
Groove Dimension	ØA 150.00 x ØB 147.80 x F 9.50

160.00

Part No	PES 1600 1578 095
Groove Dimension	ØA 160.00 x ØB 157.80 x F 9.50

170.00

Part No	PES 1700 1678 095
Groove Dimension	ØA 170.00 x ØB 167.80 x F 9.50

180.00

Part No	PES 1800 1778 095
Groove Dimension	ØA 180.00 x ØB 177.80 x F 9.50

190.00

Part No	PES 1900 1878 095
Groove Dimension	ØA 190.00 x ØB 187.80 x F 9.50

200.00

Part No	PES 2000 1978 095
Groove Dimension	ØA 200.00 x ØB 197.80 x F 9.50

210.00

Part No	PES 2100 2078 095
Groove Dimension	ØA 210.00 x ØB 207.80 x F 9.50

220.00

Part No	PES 2200 2178 095
Groove Dimension	ØA 220.00 x ØB 217.80 x F 9.50

230.00

Part No	PES 2300 2278 095
Groove Dimension	ØA 230.00 x ØB 227.80 x F 9.50

240.00

Part No	PES 2400 2378 095
Groove Dimension	ØA 240.00 x ØB 237.80 x F 9.50

280.00

Part No	PES 2800 2678 095
Groove Dimension	ØA 280.00 x ØB 267.80 x F 9.50

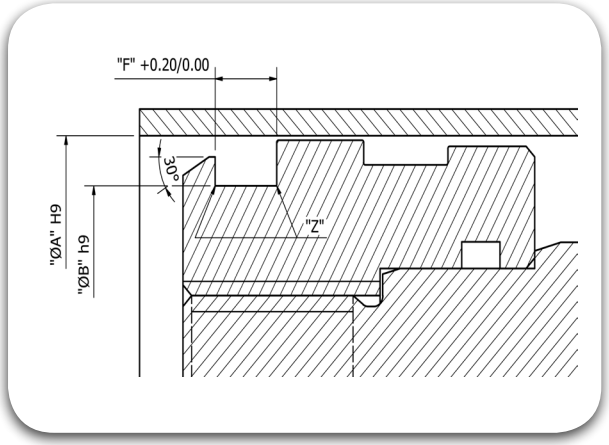

300.00

Part No	PES 3000 2878 095				
Groove Dimension	ØA	x	ØB	x	F
	300.00		287.80		9.50

320.00

Part No	PES 3200 3078 095				
Groove Dimension	ØA	x	ØB	x	F
	320.00		307.80		9.50

350.00

Part No	PES 3500 3378 095				
Groove Dimension	ØA	x	ØB	x	F
	350.00		337.80		9.50

400.00

Part No	PES 4000 3878 095				
Groove Dimension	ØA	x	ØB	x	F
	400.00		387.80		9.50

420.00

Part No	PES 4200 4078 095				
Groove Dimension	ØA	x	ØB	x	F
	420.00		407.80		9.50

450.00

Part No	PES 4500 4378 095				
Groove Dimension	ØA	x	ØB	x	F
	450.00		437.80		9.50

480.00

Part No	PES 4800 4678 095				
Groove Dimension	ØA	x	ØB	x	F
	480.00		467.80		9.50

500.00

Part No	PES 5000 4878 095				
Groove Dimension	ØA	x	ØB	x	F
	500.00		487.80		9.50

Piston Seals

PCT

TRIADA
TECHNOLOGIES

#SealingExcellence




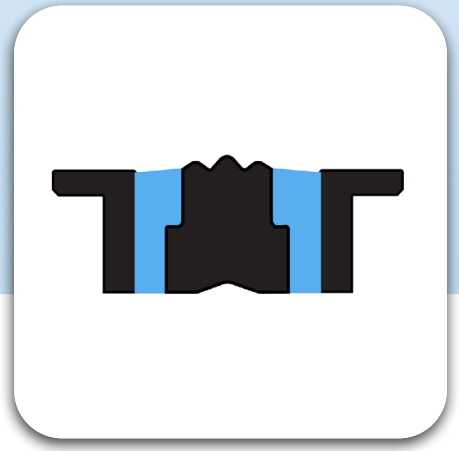

Description

The PCT Compact Seal consists of a rugged central element in TRIAFLEX®, performing the main sealing function and supported by two slit Back-Up Rings and two slit Wear Rings, which positions the Piston centrally within the Cylinder bore. These Back-Up Rings limits the extrusion of the TRIAFLEX® Sealing Element and the Wear Rings takes the responsibility of the radial loads. In other way, the PCB type Piston Seal, simplifies the Piston Seal Groove machining and also minimizes the length of the Piston to a large extent.

Diameter Range	Ø32.00 – Ø160.00
Standard material	TRIAMIDE® T485(Acetal Resin) Wear Ring/ TRIAFLEX® T571(NBR) Sealing Element / TRIATEX® T451(Polyester Resin) Anti-extrusion Ring.
Temperature(°C)	-30ºC to 130ºC
Speed	≤ 0.50 m/s
Fluids	Hydraulic fluids (Mineral Oil based).
Pressure	≤ 250 bar

Reciprocating | Oscillating | Rotary | Helix | Static | Single Acting | Double Acting

Material Details

Seal Material	Seal Material Code	BackUp Ring Material	WearRing Material
TRIAFLEX® T571 NBR	CXN	TRIATEX® T451 Polyester Elestomer	TRIAMIDE® T485 Poly-Oxy Methylene
TRIAFLEX® T675 FKM	CXF	TRIATEX® T451 Polyester Elestomer	TRIAMIDE®T485 Poly-Oxy Methylene

Nomenclature

Part No	PCT	0320	0240	155	CXN
	Seal profile	Bore Dia x 10	Groove Dia x 10	Groove Width x 10	Seal Material Code

Groove Details

Bore Diameter "A" H9	Radius
Standard Range	"Z" max
20.00 - 120.00	0.40
120.10 - 250.00	0.80

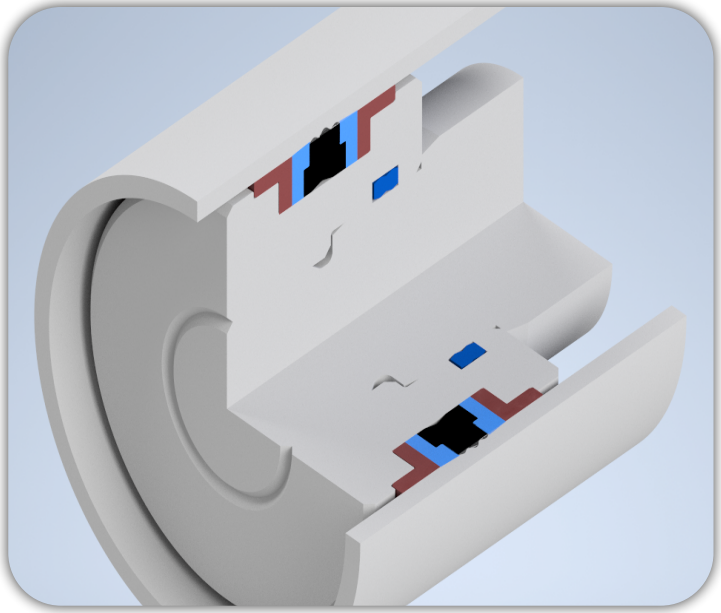

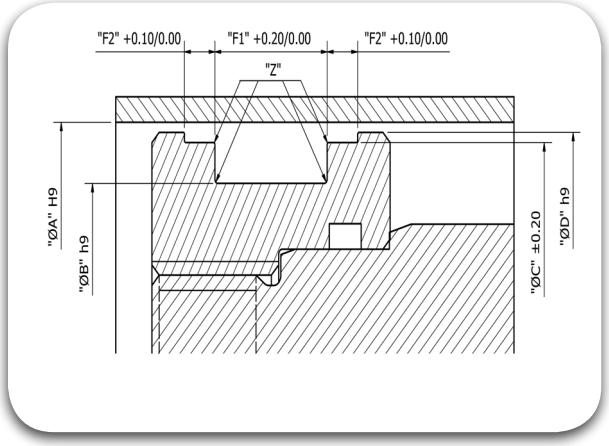

32.00

Part No	PCT 0320 0240 155											
Groove Dimension	ØA	x	ØB	x	ØC	F1	x	ØD	x	F2	x	Z
	32.00		24.00		28.00	15.50		31.40		3.20		0.40

40.00

Part No	PCT 0400 0360 155											
Groove Dimension	ØA	x	ØB	x	ØC	F1	x	ØD	x	F2	x	Z
	40.00		32.00		36.00	15.50		39.40		3.20		0.40

50.00

Part No	PCT 0500 0460 205											
Groove Dimension	ØA	x	ØB	x	ØC	F1	x	ØD	x	F2	x	Z
	50.00		38.00		46.00	20.50		49.40		4.20		0.40

60.00

Part No	PCT 0600 0560 205											
Groove Dimension	ØA	x	ØB	x	ØC	F1	x	ØD	x	F2	x	Z
	60.00		48.00		56.00	20.50		59.40		4.20		0.40

63.00

Part No	PCT 0630 0590 205											
Groove Dimension	ØA	x	ØB	x	ØC	F1	x	ØD	x	F2	x	Z
	63.00		51.00		59.00	20.50		63.40		4.20		0.40

70.00

Part No	PCT 0700 0660 205											
Groove Dimension	ØA	x	ØB	x	ØC	F1	x	ØD	x	F2	x	Z
	70.00		58.00		66.00	20.50		69.40		4.20		0.40

80.00

Part No	PCT 0800 0760 225											
Groove Dimension	ØA	x	ØB	x	ØC	F1	x	ØD	x	F2	x	Z
	80.00		66.00		76.00	22.50		79.40		5.20		0.40

90.00

Part No	PCT 0900 0860 225											
Groove Dimension	ØA	x	ØB	x	ØC	F1	x	ØD	x	F2	x	Z
	90.00		76.00		86.00	22.50		89.40		5.20		0.40

100.00

Part No	PCT 1000 0960 225											
Groove Dimension	ØA	x	ØB	x	ØC	F1	x	ØD	x	F2	x	Z
	100.00		86.00		96.00	22.50		99.40		5.20		0.40

110.00

Part No	PCT 1100 1060 225											
Groove Dimension	ØA	x	ØB	x	ØC	F1	x	ØD	x	F2	x	Z
	110.00		96.00		106.00	22.50		109.40		5.20		0.40

120.00

Part No	PCT 1200 1160 225							
Groove Dimension	ØA	x	ØB	x	ØC			
	120.00		106.00		116.00			
	F1	x	ØD	x	F2	x	Z	
	22.50		119.40		5.20		0.40	

125.00

Part No	PCT 1250 1210 265							
Groove Dimension	ØA	x	ØB	x	ØC			
	125.00		108.00		121.00			
	F1	x	ØD	x	F2	x	Z	
	26.50		124.40		7.20		0.80	

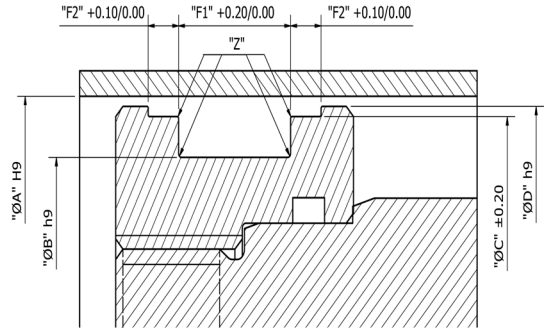

130.00

Part No	PCT 1300 1260 265							
Groove Dimension	ØA	x	ØB	x	ØC			
	130.00		113.00		126.00			
	F1	x	ØD	x	F2	x	Z	
	26.50		129.40		7.20		0.80	

140.00

Part No	PCT 1400 1360 265							
Groove Dimension	ØA	x	ØB	x	ØC			
	140.00		123.00		136.00			
	F1	x	ØD	x	F2	x	Z	
	26.50		139.40		7.20		0.80	

150.00

Part No	PCT 1500 1460 265							
Groove Dimension	ØA	x	ØB	x	ØC			
	150.00		133.00		146.00			
	F1	x	ØD	x	F2	x	Z	
	26.50		149.40		7.20		0.80	

160.00

Part No	PCT 1600 1560 265							
Groove Dimension	ØA	x	ØB	x	ØC			
	160.00		143.00		156.00			
	F1	x	ØD	x	F2	x	Z	
	26.50		159.40		7.20		0.80	

Piston Seals

PCB

TRIADA
TECHNOLOGIES

#SealingExcellence




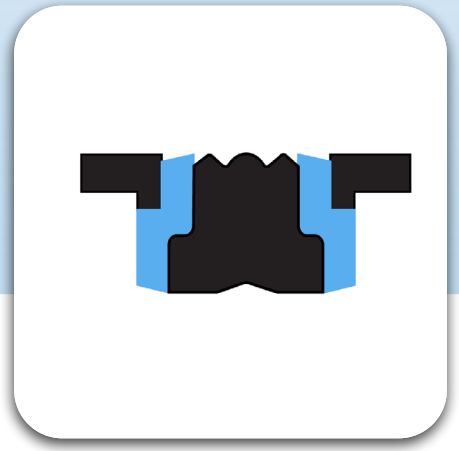

Description

The PCB Compact Seal, similar to PBM Seals, consists of a rugged central element in TRIAFLEX®, performing the main sealing function and supported by two slit Back-Up Rings and two slit Wear Rings, which positions the Piston centrally within the Cylinder bore. These Back-Up Rings limits the extrusion of the TRIAFLEX® Sealing Element and the Wear Rings takes the responsibility of the radial loads. In other way, the PCB type Piston Seal, simplifies the Piston Seal Groove machining and also minimizes the length of the Piston to a large extent.

Diameter Range	Ø20.00 – Ø320.00
Standard material	TRIAMIDE® T485(Acetal Resin) Wear Ring/ TRIAFLEX® T571(NBR) Sealing Element / TRIATEX® T451(Polyester Resin) Anti-extrusion Ring.
Temperature(°C)	-30ºC to 130ºC
Speed	≤ 0.50 m/s
Fluids	Hydraulic fluids (Mineral Oil based).
Pressure	≤ 400 bar

Reciprocating | Oscillating | Rotary | Helix | Static | Single Acting | Double Acting

Material Details

Seal Material	Seal Material Code	BackUp Ring Material	WearRing Material
TRIAFLEX® T571 NBR	CXN	TRIATEX® T451 Polyester Elestomer	TRIAMIDE® T485 Poly-Oxy Methylene
TRIAFLEX® T675 FKM	CXF	TRIATEX® T451 Polyester Elestomer	TRIAMIDE®T485 Poly-Oxy Methylene

Nomenclature

Part No	PCB	0320	0240	155	CXN
	Seal profile	Bore Dia x 10	Groove Dia x 10	Groove Width x 10	Seal Material Code

Groove Details

Bore Diameter "A" H9	Radius
Standard Range	"Z" max
20.00 - 115.00	0.40
115.10 - 250.00	0.80

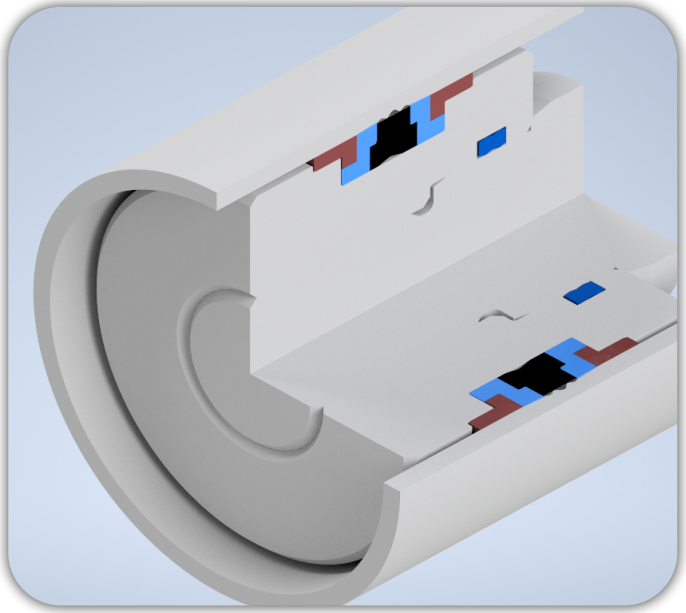

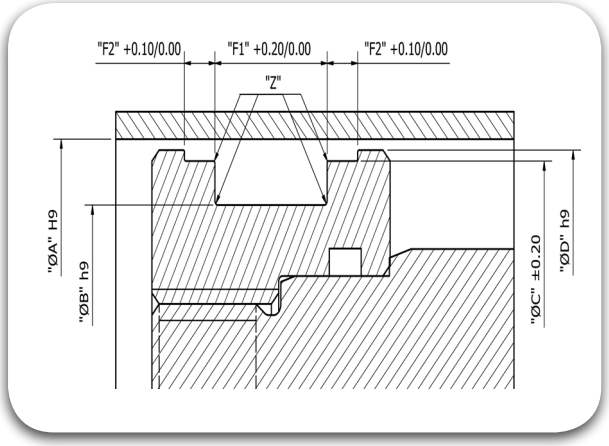

20.00

Part No	PCB 0200 0110 135		
Groove Dimension	ØA	ØB	ØC
	20.00	11.00	13.50
	F1	ØD	F2	Z
	17.00	19.00	2.10	0.40

22.00

Part No	PCB 0220 0130 135		
Groove Dimension	ØA	ØB	ØC
	22.00	13.00	13.50
	F1	ØD	F2	Z
	19.00	21.00	2.10	0.40

25.00

Part No	PCB 0250 0150 120		
Groove Dimension	ØA	ØB	ØC
	25.00	15.00	12.00
	F1	ØD	F2	Z
	21.00	23.00	4.00	0.40

25.00

Part No	PCB 0250 0150 125		
Groove Dimension	ØA	ØB	ØC
	25.00	15.00	12.50
	F1	ØD	F2	Z
	22.00	24.00	4.00	0.40

25.00

Part No	PCB 0250 0150 164		
Groove Dimension	ØA	ØB	ØC
	25.00	15.00	16.40
	F1	ØD	F2	Z
	21.45	23.50	6.35	0.40

25.00

Part No	PCB 0250 0160 135		
Groove Dimension	ØA	ØB	ØC
	25.00	16.00	13.50
	F1	ØD	F2	Z
	22.00	24.00	2.10	0.40

28.00

Part No	PCB 0280 0190 135		
Groove Dimension	ØA	ØB	ØC
	28.00	19.00	13.50
	F1	ØD	F2	Z
	25.00	27.00	2.10	0.40

30.00

Part No	PCB 0300 0210 135		
Groove Dimension	ØA	ØB	ØC
	30.00	21.00	13.50
	F1	ØD	F2	Z
	27.00	29.00	2.10	0.40

32.00

Part No	PCB 0320 0220 155		
Groove Dimension	ØA	ØB	ØC
	32.00	22.00	15.50
	F1	ØD	F2	Z
	28.00	30.00	2.60	0.40

32.00

Part No	PCB 0320 0220 164		
Groove Dimension	ØA	ØB	ØC
	32.00	22.00	16.40
	F1	ØD	F2	Z
	28.50	30.50	6.35	0.40

35.00

Part No	PCB 0350 0250 155							
Groove Dimension	ØA	x	ØB	x	ØC			
	35.00		25.00		15.50			
	F1	x	ØD	x	F2	x	Z	
	31.00		34.00		2.60		0.40	

35.00

Part No	PCB 0350 0250 164							
Groove Dimension	ØA	x	ØB	x	ØC			
	35.00		25.00		16.40			
	F1	x	ØD	x	F2	x	Z	
	31.40		33.50		6.35		0.40	

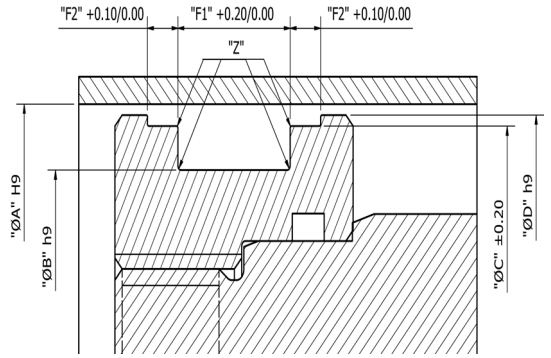

40.00

Part No	PCB 0400 0240 184							
Groove Dimension	ØA	x	ØB	x	ØC			
	40.00		24.00		18.40			
	F1	x	ØD	x	F2	x	Z	
	35.40		38.50		6.35		0.40	

40.00

Part No	PCB 0400 0260 155							
Groove Dimension	ØA	x	ØB	x	ØC			
	40.00		26.00		15.50			
	F1	x	ØD	x	F2	x	Z	
	36.00		39.00		2.60		0.40	

40.00

Part No	PCB 0400 0300 125							
Groove Dimension	ØA	x	ØB	x	ØC			
	40.00		30.00		12.50			
	F1	x	ØD	x	F2	x	Z	
	36.00		38.00		4.00		0.40	

40.00

Part No	PCB 0400 0300 164							
Groove Dimension	ØA	x	ØB	x	ØC			
	40.00		30.00		16.40			
	F1	x	ØD	x	F2	x	Z	
	35.40		38.50		6.35		0.40	

42.00

Part No	PCB 0420 0280 155							
Groove Dimension	ØA	x	ØB	x	ØC			
	42.00		28.00		15.50			
	F1	x	ØD	x	F2	x	Z	
	38.00		41.00		2.60		0.40	

45.00

Part No	PCB 0450 0290 184							
Groove Dimension	ØA	x	ØB	x	ØC			
	45.00		29.00		18.40			
	F1	x	ØD	x	F2	x	Z	
	40.40		43.50		6.35		0.40	

45.00

Part No	PCB 0450 0310 155							
Groove Dimension	ØA	x	ØB	x	ØC			
	45.00		31.00		15.50			
	F1	x	ØD	x	F2	x	Z	
	41.00		44.00		2.60		0.40	

45.00

Part No	PCB 0450 0350 164							
Groove Dimension	ØA	x	ØB	x	ØC			
	45.00		35.00		16.40			
	F1	x	ØD	x	F2	x	Z	
	40.40		43.50		6.35		0.40	

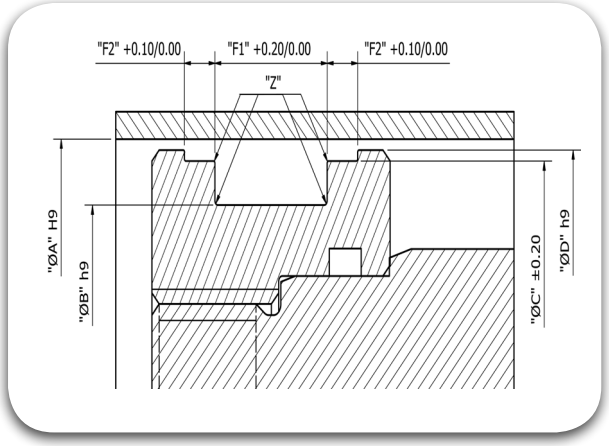

50.00

Part No	PCB 0500 0340 184								
Groove Dimension	ØA	x	ØB	x	ØC				
	50.00		34.00		18.40				
	F1	x	ØD	x	F2	x	Z		
	45.40		48.50		6.35		0.40		

50.00

Part No	PCB 0500 0340 205								
Groove Dimension	ØA	x	ØB	x	ØC				
	50.00		34.00		20.50				
	F1	x	ØD	x	F2	x	Z		
	46.00		49.00		3.10		0.40		

55.00

Part No	PCB 0550 0390 184								
Groove Dimension	ØA	x	ØB	x	ØC				
	55.00		39.00		18.40				
	F1	x	ØD	x	F2	x	Z		
	50.36		53.50		6.35		0.40		

55.00

Part No	PCB 0550 0390 205								
Groove Dimension	ØA	x	ØB	x	ØC				
	55.00		39.00		20.50				
	F1	x	ØD	x	F2	x	Z		
	51.00		54.00		3.10		0.40		

56.00

Part No	PCB 0560 0400 205								
Groove Dimension	ØA	x	ØB	x	ØC				
	56.00		40.00		20.50				
	F1	x	ØD	x	F2	x	Z		
	52.00		55.00		3.10		0.40		

60.00

Part No	PCB 0600 0440 184								
Groove Dimension	ØA	x	ØB	x	ØC				
	60.00		44.00		18.40				
	F1	x	ØD	x	F2	x	Z		
	55.40		58.50		6.35		0.40		

60.00

Part No	PCB 0600 0440 205								
Groove Dimension	ØA	x	ØB	x	ØC				
	60.00		44.00		20.50				
	F1	x	ØD	x	F2	x	Z		
	56.00		59.00		3.10		0.40		

63.00

Part No	PCB 0630 0470 184								
Groove Dimension	ØA	x	ØB	x	ØC				
	63.00		47.00		18.40				
	F1	x	ØD	x	F2	x	Z		
	58.40		61.50		6.35		0.40		

63.00

Part No	PCB 0630 0470 194								
Groove Dimension	ØA	x	ØB	x	ØC				
	63.00		47.00		19.40				
	F1	x	ØD	x	F2	x	Z		
	58.40		61.50		6.35		0.40		

63.00

Part No	PCB 0630 0470 205								
Groove Dimension	ØA	x	ØB	x	ØC				
	63.00		47.00		20.50				
	F1	x	ØD	x	F2	x	Z		
	59.00		62.00		3.10		0.40		

65.00

Part No	PCB 0650 0490 205		
Groove Dimension	ØA	ØB	ØC
	65.00	49.00	20.50
	F1	ØD	F2	Z
	61.00	64.00	3.10	0.40

65.00

Part No	PCB 0650 0500 184		
Groove Dimension	ØA	ØB	ØC
	65.00	50.00	18.40
	F1	ØD	F2	Z
	60.40	63.50	6.35	0.40

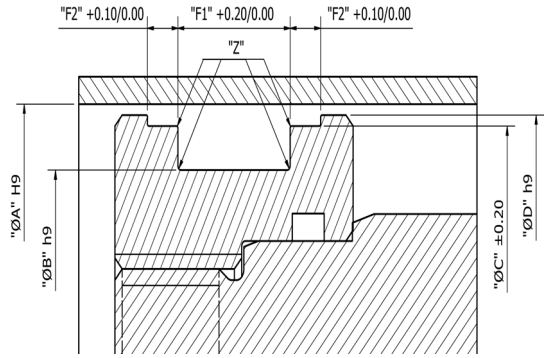

70.00

Part No	PCB 0700 0500 224		
Groove Dimension	ØA	ØB	ØC
	70.00	50.00	22.40
	F1	ØD	F2	Z
	64.20	68.30	6.35	0.40

70.00

Part No	PCB 0700 0540 205		
Groove Dimension	ØA	ØB	ØC
	70.00	54.00	20.50
	F1	ØD	F2	Z
	66.00	69.00	3.10	0.40

75.00

Part No	PCB 0750 0550 224		
Groove Dimension	ØA	ØB	ØC
	75.00	55.00	22.40
	F1	ØD	F2	Z
	69.20	73.30	6.35	0.40

75.00

Part No	PCB 0750 0590 205		
Groove Dimension	ØA	ØB	ØC
	75.00	59.00	20.50
	F1	ØD	F2	Z
	71.00	74.00	3.10	0.40

80.00

Part No	PCB 0800 0600 224		
Groove Dimension	ØA	ØB	ØC
	80.00	60.00	22.40
	F1	ØD	F2	Z
	74.15	78.30	6.35	0.40

80.00

Part No	PCB 0800 0620 225		
Groove Dimension	ØA	ØB	ØC
	80.00	62.00	22.50
	F1	ØD	F2	Z
	76.00	79.00	3.60	0.40

85.00

Part No	PCB 0850 0650 224		
Groove Dimension	ØA	ØB	ØC
	85.00	65.00	22.40
	F1	ØD	F2	Z
	79.15	83.30	6.35	0.40

90.00

Part No	PCB 0900 0700 224		
Groove Dimension	ØA	ØB	ØC
	90.00	70.00	22.40
	F1	ØD	F2	Z
	84.15	88.30	6.35	0.40

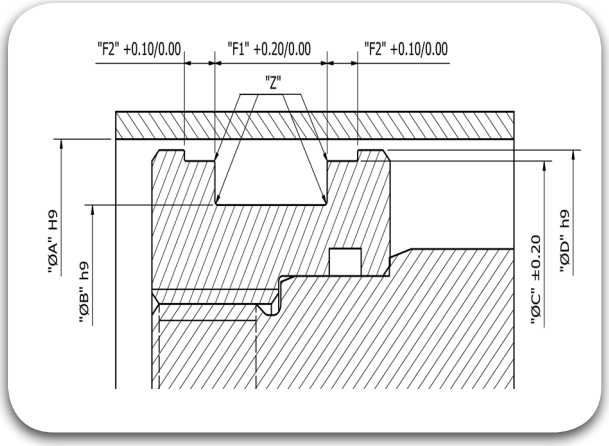

90.00

Part No	PCB 0900 0720 225								
Groove Dimension	ØA	x	ØB	x	ØC				
	90.00		72.00		22.50				
	F1	x	ØD	x	F2	x	Z		
	86.00		89.00		3.60		0.40		

95.00

Part No	PCB 0950 0750 224								
Groove Dimension	ØA	x	ØB	x	ØC				
	95.00		75.00		22.40				
	F1	x	ØD	x	F2	x	Z		
	89.15		93.30		6.35		0.40		

100.00

Part No	PCB 1000 0750 224								
Groove Dimension	ØA	x	ØB	x	ØC				
	100.00		75.00		22.40				
	F1	x	ØD	x	F2	x	Z		
	93.15		98.00		6.35		0.40		

100.00

Part No	PCB 1000 0820 225								
Groove Dimension	ØA	x	ØB	x	ØC				
	100.00		82.00		22.50				
	F1	x	ØD	x	F2	x	Z		
	96.00		99.00		3.60		0.40		

105.00

Part No	PCB 1050 0800 224								
Groove Dimension	ØA	x	ØB	x	ØC				
	105.00		80.00		22.40				
	F1	x	ØD	x	F2	x	Z		
	98.10		103.00		6.35		0.40		

110.00

Part No	PCB 1100 0850 224								
Groove Dimension	ØA	x	ØB	x	ØC				
	110.00		85.00		22.40				
	F1	x	ØD	x	F2	x	Z		
	103.10		108.00		6.35		0.40		

110.00

Part No	PCB 1100 0920 225								
Groove Dimension	ØA	x	ØB	x	ØC				
	110.00		92.00		22.50				
	F1	x	ØD	x	F2	x	Z		
	106.00		109.00		3.60		0.40		

115.00

Part No	PCB 1150 0900 224								
Groove Dimension	ØA	x	ØB	x	ØC				
	115.00		90.00		22.40				
	F1	x	ØD	x	F2	x	Z		
	108.10		113.00		6.35		0.40		

115.00

Part No	PCB 1150 0970 225								
Groove Dimension	ØA	x	ØB	x	ØC				
	115.00		97.00		22.50				
	F1	x	ØD	x	F2	x	Z		
	111.00		114.00		3.60		0.40		

120.00

Part No	PCB 1200 0950 224								
Groove Dimension	ØA	x	ØB	x	ØC				
	120.00		95.00		22.40				
	F1	x	ØD	x	F2	x	Z		
	113.10		118.10		6.35		0.80		

125.00

Part No	PCB 1250 1000 254			
Groove Dimension	ØA	ØB	ØC	
	125.00	100.00	25.40	
	F1	ØD	F2	Z
	118.10	123.00	6.35	0.80

125.00

Part No	PCB 1250 1030 265			
Groove Dimension	ØA	ØB	ØC	
	125.00	103.00	26.50	
	F1	ØD	F2	Z
	121.00	124.00	5.10	0.80

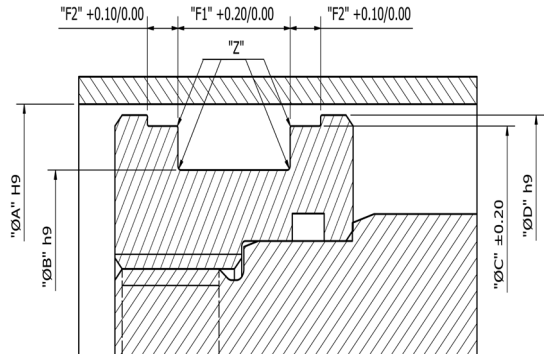

130.00

Part No	PCB 1300 1050 254			
Groove Dimension	ØA	ØB	ØC	
	130.00	105.00	25.40	
	F1	ØD	F2	Z
	122.60	127.50	9.50	0.80

130.00

Part No	PCB 1300 1050 254 /1			
Groove Dimension	ØA	ØB	ØC	
	130.00	105.00	25.40	
	F1	ØD	F2	Z
	123.10	128.00	6.35	0.80

135.00

Part No	PCB 1350 1100 254			
Groove Dimension	ØA	ØB	ØC	
	135.00	110.00	25.40	
	F1	ØD	F2	Z
	127.60	132.50	9.50	0.80

135.00

Part No	PCB 1350 1100 254 /1			
Groove Dimension	ØA	ØB	ØC	
	135.00	110.00	25.40	
	F1	ØD	F2	Z
	128.10	133.00	6.35	0.80

140.00

Part No	PCB 1400 1150 254			
Groove Dimension	ØA	ØB	ØC	
	140.00	115.00	25.40	
	F1	ØD	F2	Z
	132.60	137.50	9.50	0.80

140.00

Part No	PCB 1400 1150 254 /1			
Groove Dimension	ØA	ØB	ØC	
	140.00	115.00	25.40	
	F1	ØD	F2	Z
	133.00	138.00	6.35	0.80

140.00

Part No	PCB 1400 1180 265			
Groove Dimension	ØA	ØB	ØC	
	140.00	118.00	26.50	
	F1	ØD	F2	Z
	136.00	139.00	5.10	0.80

145.00

Part No	PCB 1450 1200 254			
Groove Dimension	ØA	ØB	ØC	
	145.00	120.00	25.40	
	F1	ØD	F2	Z
	137.60	142.50	9.50	0.80

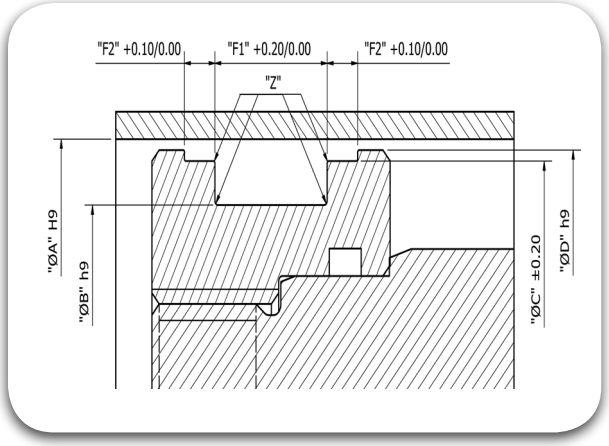

145.00

Part No	PCB 1450 1200 254 /1									
Groove Dimension	ØA	x	ØB	x	ØC	F1	x	ØD	x	F2	x	Z
	145.00		120.00		25.40	138.30		143.00		6.35		0.80

150.00

Part No	PCB 1500 1250 254									
Groove Dimension	ØA	x	ØB	x	ØC	F1	x	ØD	x	F2	x	Z
	150.00		125.00		25.40	142.60		147.50		9.50		0.80

150.00

Part No	PCB 1500 1250 254 /1									
Groove Dimension	ØA	x	ØB	x	ØC	F1	x	ØD	x	F2	x	Z
	150.00		125.00		25.40	143.00		148.00		6.35		0.80

150.00

Part No	PCB 1500 1280 265									
Groove Dimension	ØA	x	ØB	x	ØC	F1	x	ØD	x	F2	x	Z
	150.00		128.00		26.50	146.00		149.00		5.10		0.80

155.00

Part No	PCB 1550 1300 254									
Groove Dimension	ØA	x	ØB	x	ØC	F1	x	ØD	x	F2	x	Z
	155.00		130.00		25.40	147.60		152.50		9.50		0.80

155.00

Part No	PCB 1550 1300 254 /1									
Groove Dimension	ØA	x	ØB	x	ØC	F1	x	ØD	x	F2	x	Z
	155.00		130.00		25.40	148.00		153.00		6.35		0.80

160.00

Part No	PCB 1600 1300 254									
Groove Dimension	ØA	x	ØB	x	ØC	F1	x	ØD	x	F2	x	Z
	160.00		130.00		25.40	153.00		157.50		6.35		0.80

160.00

Part No	PCB 1600 1300 254 /1									
Groove Dimension	ØA	x	ØB	x	ØC	F1	x	ØD	x	F2	x	Z
	160.00		130.00		25.40	152.60		157.50		9.50		0.80

160.00

Part No	PCB 1600 1350 254									
Groove Dimension	ØA	x	ØB	x	ØC	F1	x	ØD	x	F2	x	Z
	160.00		135.00		25.40	152.60		157.50		9.50		0.80

160.00

Part No	PCB 1600 1380 265									
Groove Dimension	ØA	x	ØB	x	ØC	F1	x	ØD	x	F2	x	Z
	160.00		138.00		26.50	156.00		159.00		5.10		0.80

165.00

Part No	PCB 1650 1400 254			
Groove Dimension	ØA	ØB	ØC	
	165.00	140.00	25.40	
	F1	ØD	F2	Z
	157.60	162.50	9.50	0.80

170.00

Part No	PCB 1700 1450 254			
Groove Dimension	ØA	ØB	ØC	
	170.00	145.00	25.40	
	F1	ØD	F2	Z
	161.70	167.10	12.70	0.80

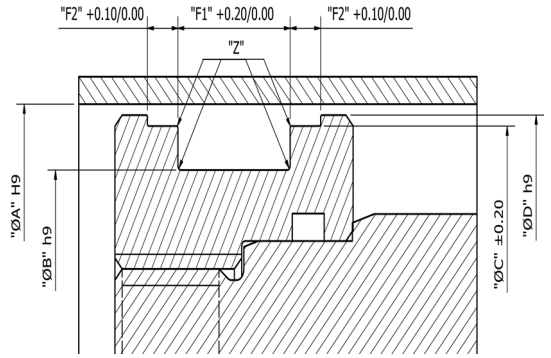

170.00

Part No	PCB 1700 1480 265			
Groove Dimension	ØA	ØB	ØC	
	170.00	148.00	26.50	
	F1	ØD	F2	Z
	166.00	169.00	5.10	0.80

175.00

Part No	PCB 1750 1500 254			
Groove Dimension	ØA	ØB	ØC	
	175.00	150.00	25.40	
	F1	ØD	F2	Z
	166.70	172.10	12.70	0.80

180.00

Part No	PCB 1800 1500 354			
Groove Dimension	ØA	ØB	ØC	
	180.00	150.00	35.40	
	F1	ØD	F2	Z
	172.95	177.90	6.35	0.80

180.00

Part No	PCB 1800 1550 254			
Groove Dimension	ØA	ØB	ØC	
	180.00	155.00	25.40	
	F1	ØD	F2	Z
	171.70	177.10	12.70	0.80

185.00

Part No	PCB 1850 1600 254			
Groove Dimension	ØA	ØB	ØC	
	185.00	160.00	25.40	
	F1	ØD	F2	Z
	176.70	182.10	12.70	0.80

190.00

Part No	PCB 1900 1650 254			
Groove Dimension	ØA	ØB	ØC	
	190.00	165.00	25.40	
	F1	ØD	F2	Z
	181.70	187.00	12.70	0.80

195.00

Part No	PCB 1950 1700 254			
Groove Dimension	ØA	ØB	ØC	
	195.00	170.00	25.40	
	F1	ØD	F2	Z
	186.70	192.00	12.70	0.80

200.00

Part No	PCB 2000 1750 254			
Groove Dimension	ØA	ØB	ØC	
	200.00	175.00	25.40	
	F1	ØD	F2	Z
	191.60	197.00	12.70	0.80

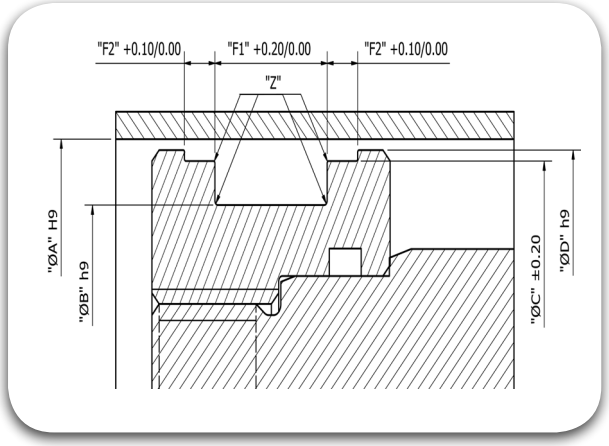

210.00

Part No	PCB 2100 1850 254									
Groove Dimension	ØA	x	ØB	x	ØC	F1	x	ØD	x	F2	x	Z
	210.00		185.00		25.40	201.60		207.00		12.70		0.80

220.00

Part No	PCB 2200 1900 354									
Groove Dimension	ØA	x	ØB	x	ØC	F1	x	ØD	x	F2	x	Z
	220.00		190.00		35.40	212.70		217.90		6.35		0.80

220.00

Part No	PCB 2200 1950 254									
Groove Dimension	ØA	x	ØB	x	ØC	F1	x	ØD	x	F2	x	Z
	220.00		195.00		25.40	211.60		217.00		12.70		0.80

230.00

Part No	PCB 2300 2050 254									
Groove Dimension	ØA	x	ØB	x	ØC	F1	x	ØD	x	F2	x	Z
	230.00		205.00		25.40	221.60		217.00		12.70		0.80

240.00

Part No	PCB 2400 2150 254									
Groove Dimension	ØA	x	ØB	x	ØC	F1	x	ØD	x	F2	x	Z
	240.00		215.00		25.40	231.60		237.00		12.70		0.80

250.00

Part No	PCB 2500 2200 354									
Groove Dimension	ØA	x	ØB	x	ØC	F1	x	ØD	x	F2	x	Z
	250.00		220.00		35.40	242.90		247.90		6.35		0.80

250.00

Part No	PCB 2500 2250 254									
Groove Dimension	ØA	x	ØB	x	ØC	F1	x	ØD	x	F2	x	Z
	250.00		225.00		25.40	241.60		247.00		12.70		0.80

Piston Seals

PBM

TRIADA
TECHNOLOGIES

#SealingExcellence




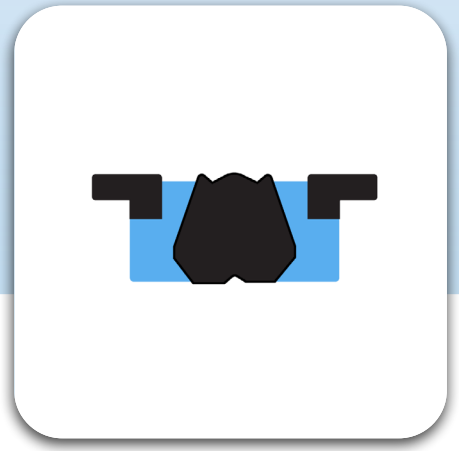

Description

The PBM Compact Seal consists of an energizing rugged central element in TRIAFLEX®, performing the main sealing function and supported by two slit Back-Up Rings and two slit Wear Rings, which positions the Piston centrally within the Cylinder bore. These concave shaped Back-Up Rings limits the extrusion of the TRIAFLEX® Sealing Element and the Wear Rings takes the responsibility of the radial loads. In other way, the PBM type Piston Seal, simplifies the Piston Seal Groove machining and also minimizes the length of the Piston to a large extent.

Diameter Range	Ø20.00 – Ø320.00
Standard material	TRIAMIDE® T485(Acetal Resin) Wear Ring/ TRIAFLEX® T571(NBR) Sealing Element / TRIATEX® T451(Polyester Resin) Anti-extrusion Ring.
Temperature(°C)	-30°C to 130°C
Speed	≤ 0.50 m/s
Fluids	Hydraulic fluids (Mineral Oil based).
Pressure	≤ 400 bar

Reciprocating | Oscillating | Rotary | Helix | Static | Single Acting | Double Acting

Material Details

Seal Material	Seal Material Code	BackUp Ring Material	WearRing Material
TRIAFLEX® NBR	CX	TRIATEX® Polyester Elestomer	TRIAMIDE® Poly-Oxy Methylene

Nomenclature

Part No	PBM	0200	0110	135	CX
	Seal profile	Bore Dia x 10	Groove Dia x 10	Groove Width x 10	Seal Material Code

Groove Details

Bore Diameter "A" H9 Standard Range	Radius "Z" max
20.00 - 115.00	0.40
115.10 - 250.00	0.80

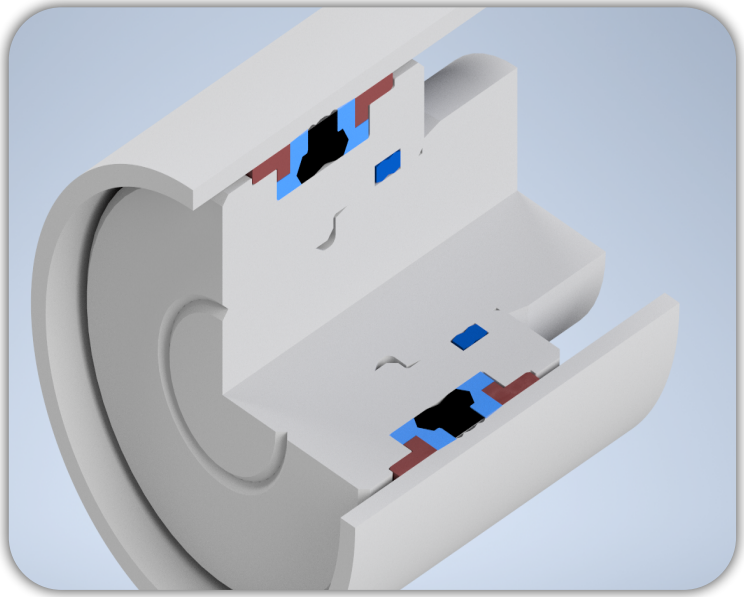

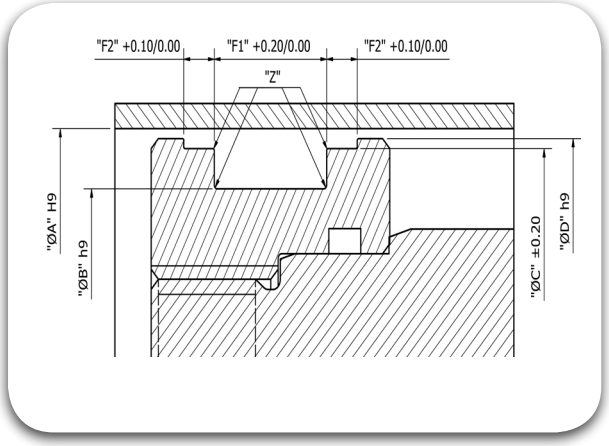

20.00

Part No	PBM 0200 0110 135		
Groove Dimension	ØA 20.00	ØB 11.00	ØC 13.50
	F1 2.10	ØD 17.00	F2 19.00	Z 0.40

22.00

Part No	PBM 0220 0130 135		
Groove Dimension	ØA 22.00	ØB 13.00	ØC 13.50
	F1 2.10	ØD 19.00	F2 21.00	Z 0.40

25.00

Part No	PBM 0250 0150 120		
Groove Dimension	ØA 25.00	ØB 15.00	ØC 12.00
	F1 4.00	ØD 21.00	F2 23.00	Z 0.40

25.00

Part No	PBM 0250 0150 125		
Groove Dimension	ØA 25.00	ØB 15.00	ØC 12.50
	F1 4.00	ØD 22.00	F2 24.00	Z 0.40

25.00

Part No	PBM 0250 0150 164		
Groove Dimension	ØA 25.00	ØB 15.00	ØC 16.40
	F1 6.35	ØD 21.00	F2 23.00	Z 0.40

25.00

Part No	PBM 0250 0160 135		
Groove Dimension	ØA 25.00	ØB 16.00	ØC 13.50
	F1 2.10	ØD 22.00	F2 24.00	Z 0.40

28.00

Part No	PBM 0280 0190 135		
Groove Dimension	ØA 28.00	ØB 19.00	ØC 13.50
	F1 2.10	ØD 25.00	F2 27.00	Z 0.40

30.00

Part No	PBM 0300 0170 154		
Groove Dimension	ØA 30.00	ØB 17.00	ØC 15.40
	F1 6.35	ØD 26.50	F2 28.00	Z 0.40

30.00

Part No	PBM 0300 0210 135		
Groove Dimension	ØA 30.00	ØB 21.00	ØC 13.50
	F1 2.10	ØD 27.00	F2 29.00	Z 0.40

32.00

Part No	PBM 0320 0220 155		
Groove Dimension	ØA 32.00	ØB 22.00	ØC 15.50
	F1 2.60	ØD 28.00	F2 31.00	Z 0.40

32.00

Part No	PBM 0320 0220 164		
Groove Dimension	ØA	ØB	ØC
	32.00	22.00	16.40
	F1	ØD	F2	Z
	6.35	28.00	30.00	0.40

35.00

Part No	PBM 0350 0250 155		
Groove Dimension	ØA	ØB	ØC
	35.00	25.00	15.50
	F1	ØD	F2	Z
	2.60	31.00	34.00	0.40

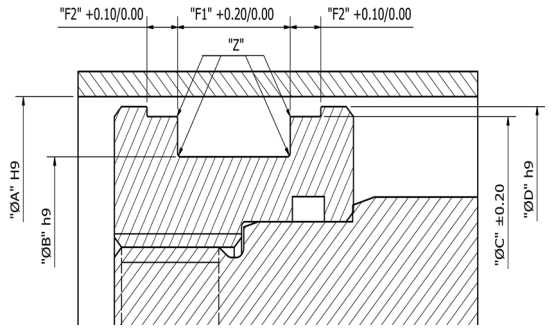

35.00

Part No	PBM 0350 0250 164		
Groove Dimension	ØA	ØB	ØC
	35.00	25.00	16.40
	F1	ØD	F2	Z
	6.35	31.40	33.50	0.40

40.00

Part No	PBM 0400 0240 184		
Groove Dimension	ØA	ØB	ØC
	40.00	24.00	18.40
	F1	ØD	F2	Z
	6.35	35.40	38.50	0.40

40.00

Part No	PBM 0400 0260 155		
Groove Dimension	ØA	ØB	ØC
	40.00	26.00	15.50
	F1	ØD	F2	Z
	2.60	36.00	30.00	0.40

40.00

Part No	PBM 0400 0300 125		
Groove Dimension	ØA	ØB	ØC
	40.00	30.00	12.50
	F1	ØD	F2	Z
	4.00	36.00	38.00	0.40

40.00

Part No	PBM 0400 0300 125 /1		
Groove Dimension	ØA	ØB	ØC
	40.00	30.00	12.50
	F1	ØD	F2	Z
	4.00	37.00	39.00	0.40

40.00

Part No	PBM 0400 0300 164		
Groove Dimension	ØA	ØB	ØC
	40.00	30.00	16.40
	F1	ØD	F2	Z
	6.35	35.40	38.00	0.40

42.00

Part No	PBM 0420 0280 155		
Groove Dimension	ØA	ØB	ØC
	42.00	28.00	15.50
	F1	ØD	F2	Z
	2.60	38.50	41.00	0.40

45.00

Part No	PBM 0450 0290 184		
Groove Dimension	ØA	ØB	ØC
	45.00	29.00	18.40
	F1	ØD	F2	Z
	6.35	40.40	43.50	0.40

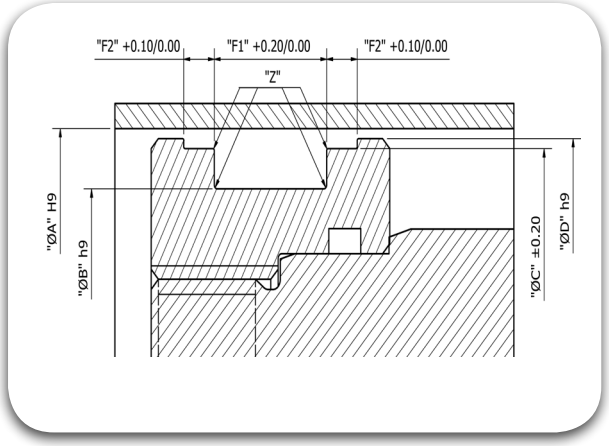

45.00

Part No	PBM 0450 0310 155			
Groove Dimension	ØA	ØB	ØC	
	45.00	31.00	15.50	
	F1	ØD	F2	Z
	2.60	41.00	44.00	0.40

45.00

Part No	PBM 0450 0350 164			
Groove Dimension	ØA	ØB	ØC	
	45.00	35.00	16.40	
	F1	ØD	F2	Z
	6.35	40.40	43.50	0.40

50.00

Part No	PBM 0500 0340 184			
Groove Dimension	ØA	ØB	ØC	
	50.00	34.00	18.40	
	F1	ØD	F2	Z
	6.35	45.40	48.50	0.40

50.00

Part No	PBM 0500 0340 205			
Groove Dimension	ØA	ØB	ØC	
	50.00	34.00	20.50	
	F1	ØD	F2	Z
	3.10	46.00	49.00	0.40

55.00

Part No	PBM 0550 0390 184			
Groove Dimension	ØA	ØB	ØC	
	55.00	39.00	18.40	
	F1	ØD	F2	Z
	6.35	50.36	53.50	0.40

55.00

Part No	PBM 0550 0390 205			
Groove Dimension	ØA	ØB	ØC	
	55.00	39.00	20.50	
	F1	ØD	F2	Z
	3.10	51.00	54.00	0.40

56.00

Part No	PBM 0560 0400 205			
Groove Dimension	ØA	ØB	ØC	
	56.00	40.00	20.50	
	F1	ØD	F2	Z
	3.10	52.00	55.00	0.40

60.00

Part No	PBM 0600 0440 184			
Groove Dimension	ØA	ØB	ØC	
	60.00	44.00	18.40	
	F1	ØD	F2	Z
	6.35	55.40	58.50	0.40

60.00

Part No	PBM 0600 0440 205			
Groove Dimension	ØA	ØB	ØC	
	60.00	44.00	20.50	
	F1	ØD	F2	Z
	3.10	56.00	59.00	0.40

63.00

Part No	PBM 0630 0470 184			
Groove Dimension	ØA	ØB	ØC	
	63.00	47.00	18.40	
	F1	ØD	F2	Z
	6.35	58.00	61.50	0.40

63.00

Part No	PBM 0630 0470 194		
Groove Dimension	ØA x ØB x ØC		
	63.00	47.00	19.40
	F1 x ØD x F2 x Z		
	6.35	58.00	61.50	0.40

63.00

Part No	PBM 0630 0470 205		
Groove Dimension	ØA x ØB x ØC		
	63.00	47.00	20.50
	F1 x ØD x F2 x Z		
	3.10	59.00	62.00	0.40

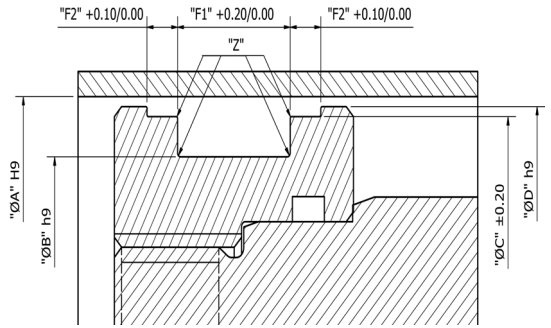

65.00

Part No	PBM 0650 0490 205		
Groove Dimension	ØA x ØB x ØC		
	65.00	49.00	20.50
	F1 x ØD x F2 x Z		
	3.10	61.00	64.00	0.40

65.00

Part No	PBM 0650 0500 184		
Groove Dimension	ØA x ØB x ØC		
	65.00	50.00	18.40
	F1 x ØD x F2 x Z		
	6.35	60.40	63.50	0.40

70.00

Part No	PBM 0700 0500 224		
Groove Dimension	ØA x ØB x ØC		
	70.00	50.00	22.40
	F1 x ØD x F2 x Z		
	6.35	64.20	68.30	0.40

70.00

Part No	PBM 0700 0540 205		
Groove Dimension	ØA x ØB x ØC		
	70.00	54.00	20.50
	F1 x ØD x F2 x Z		
	3.10	66.00	69.00	0.40

75.00

Part No	PBM 0750 0550 224		
Groove Dimension	ØA x ØB x ØC		
	75.00	55.00	22.40
	F1 x ØD x F2 x Z		
	6.35	69.20	73.30	0.40

75.00

Part No	PBM 0750 0590 205		
Groove Dimension	ØA x ØB x ØC		
	75.00	59.00	20.50
	F1 x ØD x F2 x Z		
	3.10	71.00	74.00	0.40

80.00

Part No	PBM 0800 0600 224		
Groove Dimension	ØA x ØB x ØC		
	80.00	60.00	22.40
	F1 x ØD x F2 x Z		
	6.35	74.15	78.30	0.40

80.00

Part No	PBM 0800 0620 225		
Groove Dimension	ØA x ØB x ØC		
	80.00	62.00	22.50
	F1 x ØD x F2 x Z		
	3.60	76.00	79.00	0.40

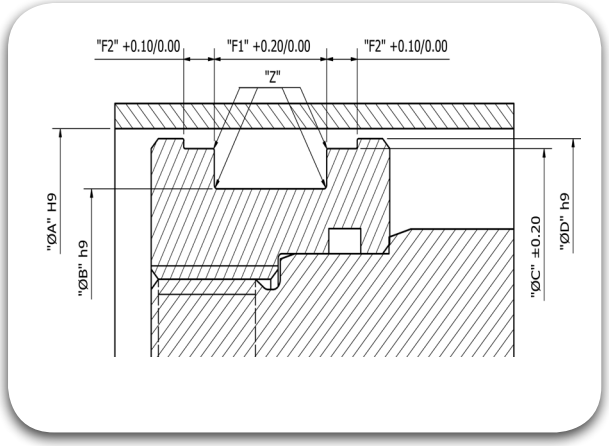

85.00

Part No	PBM 0850 0650 224		
Groove Dimension	ØA	ØB	ØC
	85.00	65.00	22.40
	F1	ØD	F2	Z
	6.35	79.15	83.30	0.40

90.00

Part No	PBM 0900 0700 224		
Groove Dimension	ØA	ØB	ØC
	90.00	70.00	22.40
	F1	ØD	F2	Z
	6.35	84.15	88.30	0.40

90.00

Part No	PBM 0900 0720 225		
Groove Dimension	ØA	ØB	ØC
	90.00	72.00	22.50
	F1	ØD	F2	Z
	3.60	86.00	89.00	0.40

95.00

Part No	PBM 0950 0750 224		
Groove Dimension	ØA	ØB	ØC
	95.00	75.00	22.40
	F1	ØD	F2	Z
	6.35	89.15	93.30	0.40

100.00

Part No	PBM 1000 0750 224		
Groove Dimension	ØA	ØB	ØC
	100.00	75.00	22.40
	F1	ØD	F2	Z
	6.35	93.15	98.00	0.40

100.00

Part No	PBM 1000 0820 225		
Groove Dimension	ØA	ØB	ØC
	100.00	82.00	22.50
	F1	ØD	F2	Z
	3.60	96.00	99.00	0.40

105.00

Part No	PBM 1050 0800 224		
Groove Dimension	ØA	ØB	ØC
	105.00	80.00	22.40
	F1	ØD	F2	Z
	6.35	98.10	103.00	0.40

110.00

Part No	PBM 1100 0850 224		
Groove Dimension	ØA	ØB	ØC
	110.00	85.00	22.40
	F1	ØD	F2	Z
	6.35	103.10	108.00	0.40

110.00

Part No	PBM 1100 0920 225		
Groove Dimension	ØA	ØB	ØC
	110.00	92.00	22.50
	F1	ØD	F2	Z
	3.60	106.00	109.00	0.40

115.00

Part No	PBM 1150 0900 224		
Groove Dimension	ØA	ØB	ØC
	115.00	90.00	22.40
	F1	ØD	F2	Z
	6.35	108.10	113.00	0.40

115.00

Part No	PBM 1150 0970 225							
Groove Dimension	ØA	x	ØB	x	ØC			
	115.00		97.00		22.50			
	F1	x	ØD	x	F2	x	Z	
	3.60		111.00		114.00		0.40	

120.00

Part No	PBM 1200 0950 224							
Groove Dimension	ØA	x	ØB	x	ØC			
	120.00		95.00		22.40			
	F1	x	ØD	x	F2	x	Z	
	6.35		113.10		118.10		0.80	

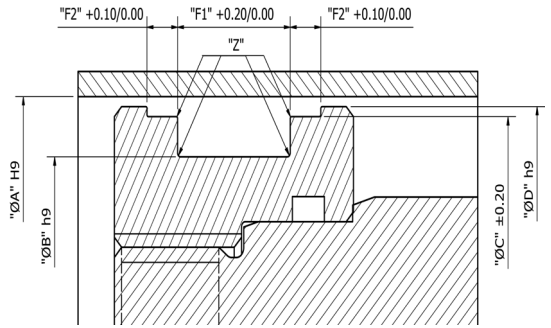

125.00

Part No	PBM 1250 1000 254							
Groove Dimension	ØA	x	ØB	x	ØC			
	125.00		100.00		25.40			
	F1	x	ØD	x	F2	x	Z	
	6.35		118.10		123.00		0.80	

125.00

Part No	PBM 1250 1030 265							
Groove Dimension	ØA	x	ØB	x	ØC			
	125.00		103.00		26.50			
	F1	x	ØD	x	F2	x	Z	
	5.10		121.00		124.00		0.80	

130.00

Part No	PBM 1300 1050 254							
Groove Dimension	ØA	x	ØB	x	ØC			
	130.00		105.00		25.40			
	F1	x	ØD	x	F2	x	Z	
	9.50		122.60		127.00		0.80	

130.00

Part No	PBM 1300 1050 265							
Groove Dimension	ØA	x	ØB	x	ØC			
	130.00		105.00		26.50			
	F1	x	ØD	x	F2	x	Z	
	6.35		123.10		128.00		0.80	

133.00

Part No	PBM 1330 1150 224							
Groove Dimension	ØA	x	ØB	x	ØC			
	133.00		115.00		22.40			
	F1	x	ØD	x	F2	x	Z	
	9.52		125.60		130.50		0.80	

135.00

Part No	PBM 1350 1100 254							
Groove Dimension	ØA	x	ØB	x	ØC			
	135.00		110.00		25.40			
	F1	x	ØD	x	F2	x	Z	
	9.50		127.60		132.50		0.80	

135.00

Part No	PBM 1350 1100 254 /1							
Groove Dimension	ØA	x	ØB	x	ØC			
	135.00		110.00		25.40			
	F1	x	ØD	x	F2	x	Z	
	6.35		128.10		133.00		0.80	

140.00

Part No	PBM 1400 1150 254							
Groove Dimension	ØA	x	ØB	x	ØC			
	140.00		115.00		25.40			
	F1	x	ØD	x	F2	x	Z	
	9.50		132.60		137.50		0.80	

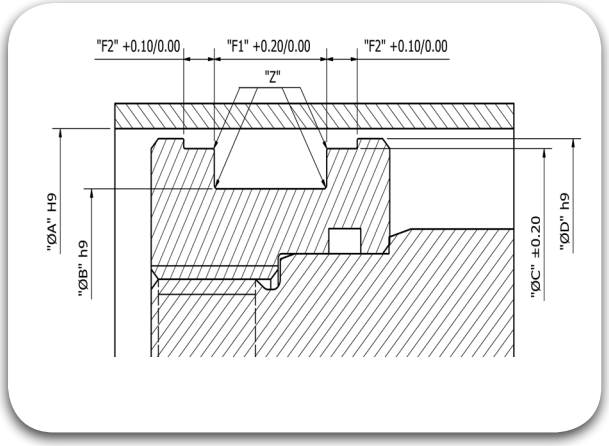

140.00

Part No	PBM 1400 1150 254 /1							
Groove Dimension	ØA	x	ØB	x	ØC			
	140.00		115.00		25.40			
	F1	x	ØD	x	F2	x	Z	
	6.35		133.00		138.00		0.80	

140.00

Part No	PBM 1400 1180 265							
Groove Dimension	ØA	x	ØB	x	ØC			
	140.00		118.00		26.50			
	F1	x	ØD	x	F2	x	Z	
	5.10		136.00		139.00		0.80	

145.00

Part No	PBM 1450 1200 254							
Groove Dimension	ØA	x	ØB	x	ØC			
	145.00		120.00		25.40			
	F1	x	ØD	x	F2	x	Z	
	9.50		137.60		142.50		0.80	

145.00

Part No	PBM 1450 1200 254 /1							
Groove Dimension	ØA	x	ØB	x	ØC			
	145.00		120.00		25.40			
	F1	x	ØD	x	F2	x	Z	
	6.35		138.30		142.95		0.80	

150.00

Part No	PBM 1500 1250 254							
Groove Dimension	ØA	x	ØB	x	ØC			
	150.00		125.00		25.40			
	F1	x	ØD	x	F2	x	Z	
	9.50		142.60		147.50		0.80	

150.00

Part No	PBM 1500 1250 254 /1							
Groove Dimension	ØA	x	ØB	x	ØC			
	150.00		125.00		25.40			
	F1	x	ØD	x	F2	x	Z	
	6.35		143.00		148.00		0.80	

150.00

Part No	PBM 1500 1280 265							
Groove Dimension	ØA	x	ØB	x	ØC			
	150.00		128.00		26.50			
	F1	x	ØD	x	F2	x	Z	
	5.10		146.00		149.00		0.80	

152.40

Part No	PBM 1520 1270 317							
Groove Dimension	ØA	x	ØB	x	ØC			
	152.40		127.00		31.75			
	F1	x	ØD	x	F2	x	Z	
	9.50		145.00		149.91		0.80	

155.00

Part No	PBM 1550 1300 254							
Groove Dimension	ØA	x	ØB	x	ØC			
	155.00		130.00		25.40			
	F1	x	ØD	x	F2	x	Z	
	9.50		147.00		152.50		0.80	

155.00

Part No	PBM 1550 1300 254 /1							
Groove Dimension	ØA	x	ØB	x	ØC			
	155.00		130.00		25.40			
	F1	x	ØD	x	F2	x	Z	
	6.35		148.00		153.00		0.80	

160.00

Part No	PBM 1600 1300 254			
Groove Dimension	ØA	ØB	ØC	
	160.00	130.00	25.40	
	F1	ØD	F2	Z
	6.35	153.00	157.50	0.80

160.00

Part No	PBM 1600 1300 254 /1			
Groove Dimension	ØA	ØB	ØC	
	160.00	130.00	25.40	
	F1	ØD	F2	Z
	9.50	152.60	157.50	0.80

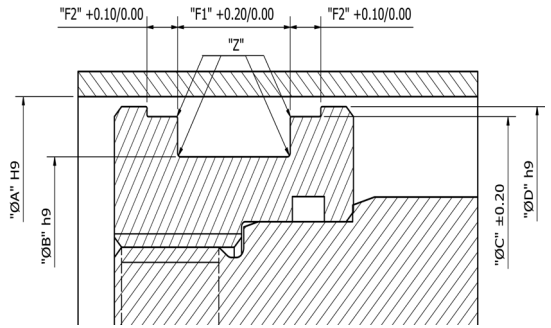

160.00

Part No	PBM 1600 1350 254			
Groove Dimension	ØA	ØB	ØC	
	160.00	135.00	25.40	
	F1	ØD	F2	Z
	9.50	152.60	157.50	0.80

160.00

Part No	PBM 1600 1380 265			
Groove Dimension	ØA	ØB	ØC	
	160.00	138.00	26.50	
	F1	ØD	F2	Z
	5.10	156.00	159.00	0.80

165.00

Part No	PBM 1650 1400 254			
Groove Dimension	ØA	ØB	ØC	
	165.00	140.00	25.40	
	F1	ØD	F2	Z
	9.50	157.60	162.50	0.80

170.00

Part No	PBM 1700 1450 254			
Groove Dimension	ØA	ØB	ØC	
	170.00	145.00	25.40	
	F1	ØD	F2	Z
	12.70	161.70	167.10	0.80

170.00

Part No	PBM 1700 1480 265			
Groove Dimension	ØA	ØB	ØC	
	170.00	148.00	26.50	
	F1	ØD	F2	Z
	5.10	166.00	169.00	0.80

175.00

Part No	PBM 1750 1500 254			
Groove Dimension	ØA	ØB	ØC	
	175.00	150.00	25.40	
	F1	ØD	F2	Z
	12.70	166.70	172.10	0.80

180.00

Part No	PBM 1800 1500 354			
Groove Dimension	ØA	ØB	ØC	
	180.00	150.00	35.40	
	F1	ØD	F2	Z
	6.35	172.95	177.87	0.80

180.00

Part No	PBM 1800 1550 254			
Groove Dimension	ØA	ØB	ØC	
	180.00	155.00	25.40	
	F1	ØD	F2	Z
	12.70	171.70	177.10	0.80

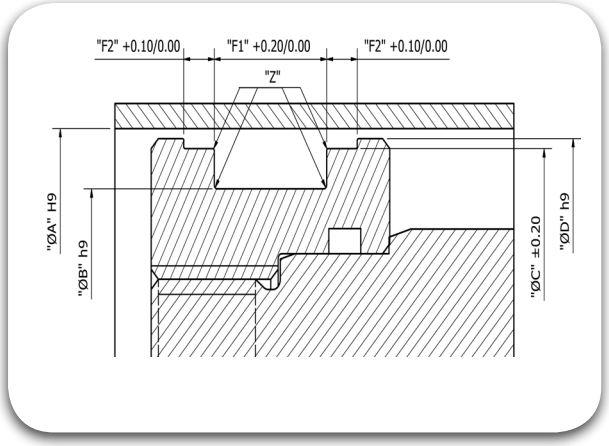

185.00

Part No	PBM 1850 1600 254							
Groove Dimension	ØA	x	ØB	x	ØC			
	185.00		160.00		25.40			
	F1	x	ØD	x	F2	x	Z	
	12.70		176.70		182.10		0.80	

190.00

Part No	PBM 1900 1650 254							
Groove Dimension	ØA	x	ØB	x	ØC			
	190.00		165.00		25.40			
	F1	x	ØD	x	F2	x	Z	
	12.70		181.70		187.00		0.80	

195.00

Part No	PBM 1950 1700 254							
Groove Dimension	ØA	x	ØB	x	ØC			
	195.00		170.00		25.40			
	F1	x	ØD	x	F2	x	Z	
	12.70		186.70		192.00		0.80	

200.00

Part No	PBM 2000 1750 254							
Groove Dimension	ØA	x	ØB	x	ØC			
	200.00		175.00		25.40			
	F1	x	ØD	x	F2	x	Z	
	12.70		191.60		197.00		0.80	

200.00

Part No	PBM 2000 1750 315							
Groove Dimension	ØA	x	ØB	x	ØC			
	200.00		175.00		31.50			
	F1	x	ØD	x	F2	x	Z	
	6.60		196.00		199.00		0.80	

210.00

Part No	PBM 2100 1850 254							
Groove Dimension	ØA	x	ØB	x	ØC			
	210.00		185.00		25.40			
	F1	x	ØD	x	F2	x	Z	
	12.70		201.60		207.00		0.80	

220.00

Part No	PBM 2200 1900 354							
Groove Dimension	ØA	x	ØB	x	ØC			
	220.00		190.00		35.40			
	F1	x	ØD	x	F2	x	Z	
	6.35		212.70		217.90		0.80	

220.00

Part No	PBM 2200 1950 254							
Groove Dimension	ØA	x	ØB	x	ØC			
	220.00		195.00		25.40			
	F1	x	ØD	x	F2	x	Z	
	12.70		211.60		217.00		0.80	

230.00

Part No	PBM 2300 2050 254							
Groove Dimension	ØA	x	ØB	x	ØC			
	230.00		205.00		25.40			
	F1	x	ØD	x	F2	x	Z	
	12.70		221.60		227.00		0.80	

240.00

Part No	PBM 2400 2150 254							
Groove Dimension	ØA	x	ØB	x	ØC			
	240.00		215.00		25.40			
	F1	x	ØD	x	F2	x	Z	
	12.70		231.60		237.00		0.80	

250.00

Part No	PBM 2500 2200 354							
Groove Dimension	ØA	x	ØB	x	ØC			
	250.00		220.00		35.40			
	F1	x	ØD	x	F2	x	Z	
	6.35		242.90		247.85		0.80	

250.00

Part No	PBM 2500 2250 254							
Groove Dimension	ØA	x	ØB	x	ØC			
	250.00		225.00		25.40			
	F1	x	ØD	x	F2	x	Z	
	12.70		241.60		247.00		0.80	

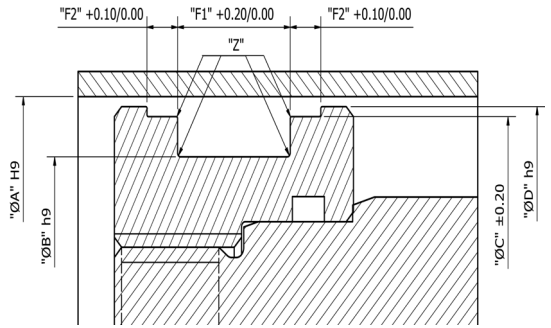

Piston Seals

PSP

TRIADA
TECHNOLOGIES

#SealingExcellence




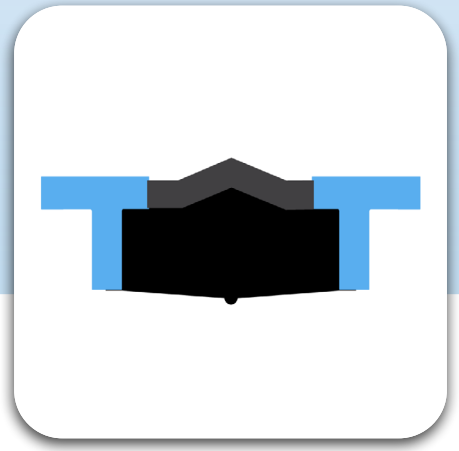

Description

The PSP Compact Seal is a double acting piston seal which is similar to PPC but the groove dimensions has been changed to have the necessary deformation when installed in the closed groove. This seal consists of a rugged central element in TRIAFLEX® with fabric reinforcement, performing the main sealing function and supported by two slit Wear Rings, which positions the Piston centrally within the Cylinder bore. These wear rings limits the extrusion of the TRIAFLEX® Sealing Element and takes the responsibility of the radial loads and also resists the dynamic and static friction.

Diameter Range	Ø25.00 – Ø250.00
Standard material	TRIAMIDE® (Acetal Resin+PTFE + Glass Fibre) Wear Rings /Fabric Reinforced TRIAFLEX® (NBR) Sealing Element.
Temperature(°C)	-30°C to 130°C
Speed	≤ 0.50 m/s
Fluids	Hydraulic fluids (Mineral Oil based).
Pressure	≤ 350 bar

Reciprocating · Oscillating · Rotary · Helix · Static · Single Acting · Double Acting

Material Details

Seal Material	Seal Material Code	WearRing Material
TRIAFLEX® NBR	CX	TRIAMIDE® Poly-Oxy Methylene

Nomenclature

Part No	PSP	0250	0170	100	CX
	Seal profile	Bore Dia x 10	Groove Dia x 10	Groove Width x 10	Seal Material Code

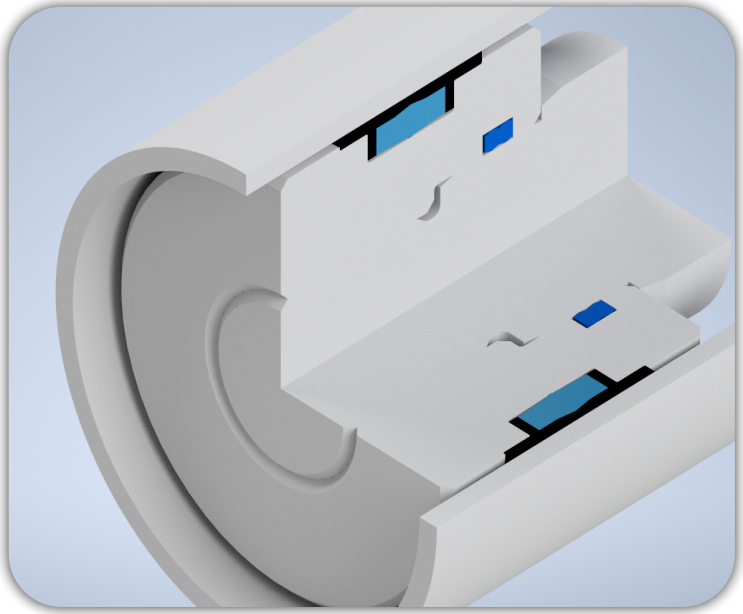

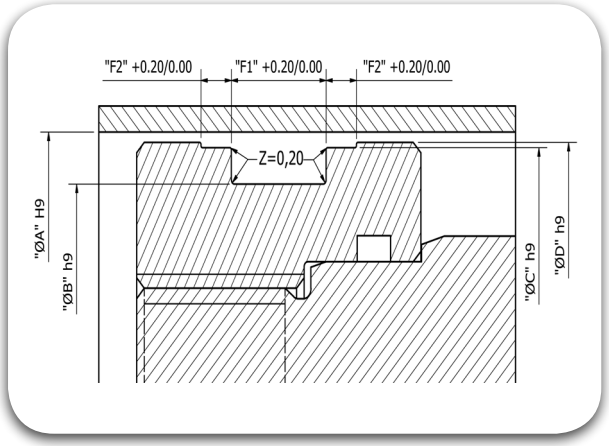

25.00

Part No	PSP 0250 0170 100		
Groove Dimension	ØA 25.00	ØB 17.00	F1 10.00
	F2 4.00	ØC 22.00	ØD 24.00

32.00

Part No	PSP 0320 0240 155		
Groove Dimension	ØA 32.00	ØB 24.00	F1 15.50
	F2 3.20	ØC 28.00	ØD 31.40

32.00

Part No	PSP 0320 0240 100		
Groove Dimension	ØA 32.00	ØB 24.00	F1 10.00
	F2 4.00	ØC 29.00	ØD 31.00

35.00

Part No	PSP 0350 0270 155		
Groove Dimension	ØA 35.00	ØB 27.00	F1 15.50
	F2 3.20	ØC 31.00	ØD 34.40

40.00

Part No	PSP 0400 0320 155		
Groove Dimension	ØA 40.00	ØB 32.00	F1 15.50
	F2 3.20	ØC 36.00	ØD 39.40

40.00

Part No	PSP 0400 0320 100		
Groove Dimension	ØA 40.00	ØB 32.00	F1 10.00
	F2 4.00	ØC 37.00	ØD 39.00

45.00

Part No	PSP 0450 0370 155		
Groove Dimension	ØA 45.00	ØB 37.00	F1 15.50
	F2 3.20	ØC 41.00	ØD 44.40

50.00

Part No	PSP 0500 0380 205		
Groove Dimension	ØA 50.00	ØB 38.00	F1 20.50
	F2 4.20	ØC 46.00	ØD 49.40

50.00

Part No	PSP 0500 0400 125		
Groove Dimension	ØA 50.00	ØB 40.00	F1 12.50
	F2 4.00	ØC 47.00	ØD 49.00

55.00

Part No	PSP 0550 0430 205		
Groove Dimension	ØA 55.00	ØB 43.00	F1 20.50
	F2 4.20	ØC 51.00	ØD 54.40

60.00

Part No	PSP 0600 0480 205					
Groove Dimension	ØA	x	ØB	x	F1	
	60.00		48.00		20.50	
	F2	x	ØC	x	ØD	
	4.20		56.00		59.40	

63.00

Part No	PSP 0630 0510 205					
Groove Dimension	ØA	x	ØB	x	F1	
	63.00		51.00		20.50	
	F2	x	ØC	x	ØD	
	4.20		59.00		62.40	

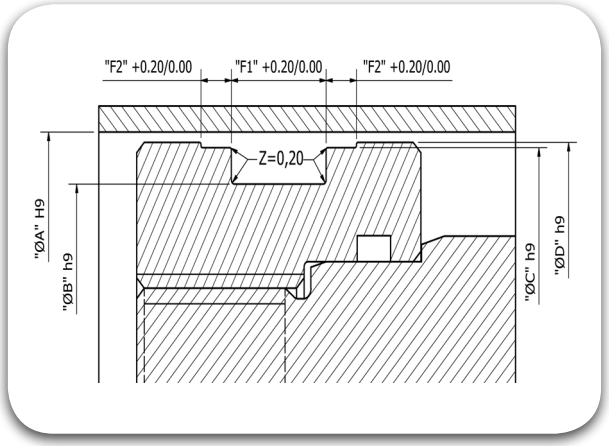

63.00

Part No	PSP 0630 0530 125					
Groove Dimension	ØA	x	ØB	x	F1	
	63.00		53.00		12.50	
	F2	x	ØC	x	ØD	
	4.00		60.00		62.00	

65.00

Part No	PSP 0650 0530 205					
Groove Dimension	ØA	x	ØB	x	F1	
	65.00		53.00		20.50	
	F2	x	ØC	x	ØD	
	4.20		61.00		64.40	

70.00

Part No	PSP 0700 0580 205					
Groove Dimension	ØA	x	ØB	x	F1	
	70.00		58.00		20.50	
	F2	x	ØC	x	ØD	
	4.20		66.00		69.40	

75.00

Part No	PSP 0750 0630 205					
Groove Dimension	ØA	x	ØB	x	F1	
	75.00		63.00		20.50	
	F2	x	ØC	x	ØD	
	4.20		71.00		74.40	

80.00

Part No	PSP 0800 0650 200					
Groove Dimension	ØA	x	ØB	x	F1	
	80.00		65.00		20.00	
	F2	x	ØC	x	ØD	
	5.00		76.00		78.50	

80.00

Part No	PSP 0800 0660 225					
Groove Dimension	ØA	x	ØB	x	F1	
	80.00		66.00		22.50	
	F2	x	ØC	x	ØD	
	5.20		76.00		79.40	

85.00

Part No	PSP 0850 0710 225					
Groove Dimension	ØA	x	ØB	x	F1	
	85.00		71.00		22.50	
	F2	x	ØC	x	ØD	
	5.20		81.00		84.40	

90.00

Part No	PSP 0900 0760 225					
Groove Dimension	ØA	x	ØB	x	F1	
	90.00		76.00		22.50	
	F2	x	ØC	x	ØD	
	5.20		86.00		89.40	

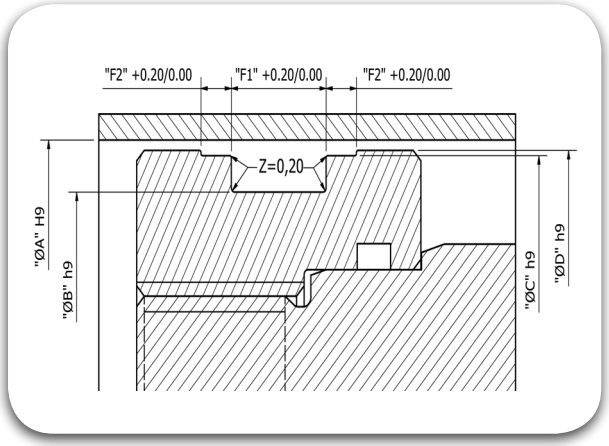

100.00

Part No	PSP 1000 0850 200					
Groove Dimension	ØA	x	ØB	x	F1	
	100.00		85.00		20.00	
	F2	x	ØC	x	ØD	
	5.00		96.00		98.50	

100.00

Part No	PSP 1000 0860 225					
Groove Dimension	ØA	x	ØB	x	F1	
	100.00		86.00		22.50	
	F2	x	ØC	x	ØD	
	5.20		96.00		99.40	

110.00

Part No	PSP 1100 0960 225					
Groove Dimension	ØA	x	ØB	x	F1	
	110.00		96.00		22.50	
	F2	x	ØC	x	ØD	
	5.20		106.00		109.40	

120.00

Part No	PSP 1200 1060 225					
Groove Dimension	ØA	x	ØB	x	F1	
	120.00		106.00		22.50	
	F2	x	ØC	x	ØD	
	5.20		116.00		119.40	

125.00

Part No	PSP 1250 1050 250					
Groove Dimension	ØA	x	ØB	x	F1	
	125.00		105.00		25.00	
	F2	x	ØC	x	ØD	
	6.30		120.00		123.00	

125.00

Part No	PSP 1250 1080 265					
Groove Dimension	ØA	x	ØB	x	F1	
	125.00		108.00		26.50	
	F2	x	ØC	x	ØD	
	7.20		121.00		124.40	

140.00

Part No	PSP 1400 1200 250					
Groove Dimension	ØA	x	ØB	x	F1	
	140.00		120.00		25.00	
	F2	x	ØC	x	ØD	
	6.30		135.00		138.00	

140.00

Part No	PSP 1400 1230 265					
Groove Dimension	ØA	x	ØB	x	F1	
	140.00		123.00		26.50	
	F2	x	ØC	x	ØD	
	7.20		136.00		139.40	

150.00

Part No	PSP 1500 1330 265					
Groove Dimension	ØA	x	ØB	x	F1	
	150.00		133.00		26.50	
	F2	x	ØC	x	ØD	
	7.20		146.00		149.40	

160.00

Part No	PSP 1600 1400 250					
Groove Dimension	ØA	x	ØB	x	F1	
	160.00		140.00		25.00	
	F2	x	ØC	x	ØD	
	6.30		155.00		158.00	

160.00

Part No	PSP 1600 1430 265					
Groove Dimension	ØA	x	ØB	x	F1	
	160.00		143.00		26.50	
	F2	x	ØC	x	ØD	
	7.20		156.00		159.40	

180.00

Part No	PSP 1800 1630 265					
Groove Dimension	ØA	x	ØB	x	F1	
	180.00		163.00		26.50	
	F2	x	ØC	x	ØD	
	7.20		176.00		179.40	

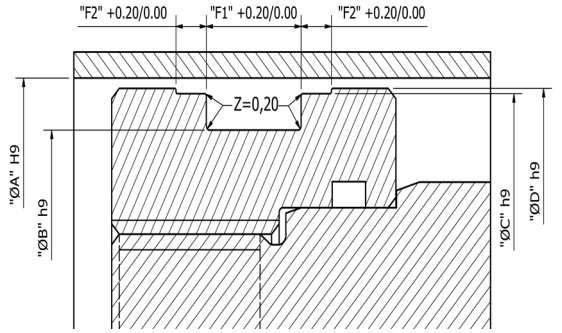

200.00

Part No	PSP 2000 1700 360					
Groove Dimension	ØA	x	ØB	x	F1	
	200.00		170.00		36.00	
	F2	x	ØC	x	ØD	
	12.50		192.00		197.00	

200.00

Part No	PSP 2000 1800 315					
Groove Dimension	ØA	x	ØB	x	F1	
	200.00		180.00		31.50	
	F2	x	ØC	x	ØD	
	9.20		196.00		199.40	

220.00

Part No	PSP 2200 2000 315					
Groove Dimension	ØA	x	ØB	x	F1	
	220.00		200.00		31.50	
	F2	x	ØC	x	ØD	
	9.20		216.00		219.40	

250.00

Part No	PSP 2500 2300 315					
Groove Dimension	ØA	x	ØB	x	F1	
	250.00		230.00		31.50	
	F2	x	ØC	x	ØD	
	9.20		246.00		249.40	

Piston Seals

PTC

TRIADA
TECHNOLOGIES

#SealingExcellence




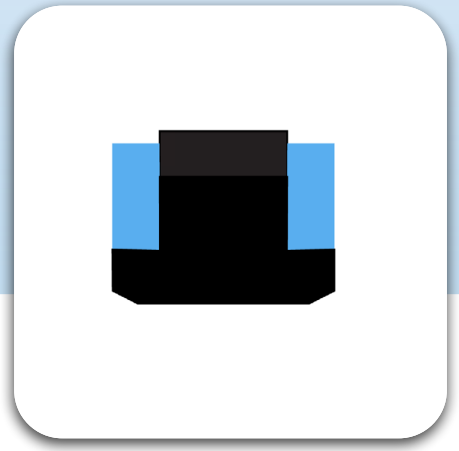

Description

The PTC Compact Seal is a double acting piston seal consisting of a TRIALON® (filled or unfilled PTFE) element, performing the main sealing function and energized by an elastomer in TRIAFLEX® (NBR material), supported by two slit Back-Up Rings, which positions the Piston centrally within the Cylinder bore. These Back-Up Rings limits the extrusion of the Sealing Element and thus enhances the life of the seal.

Diameter Range	Ø20.00 – Ø500.00
Standard material	TRIAMIDE® (PA) Anti-extrusion Rings / TRIALON® (Bronze Filled PTFE) Sealing Element / Energiser in TRIAFLEX®(HNBR) .
Temperature(°C)	-30ºC to 130ºC
Speed	≤ 1.50 m/s
Fluids	Hydraulic fluids (Mineral Oil based).
Pressure	≤ 800 bar

Reciprocating | Oscillating | Rotary | Helix | Static | Single Acting | Double Acting

Material Details

Seal Material	Seal Material Code	O-Ring Material	O-Ring Material / Code
TRIALON® Bronze Filled PTFE	T415	TRIAFLEX® NBR	N (T571)
TRIALON® Carbon Filled PTFE	T417	TRIAFLEX® FKM	F (T675)
		TRIAFLEX® EPDM	E (T771)
		TRIAFLEX® HNBR	H (T531)

Nomenclature

Part No	PTC	1000	0845	063	T415	N
	Seal profile	Bore Dia x 10	Groove Dia x 10	Groove Width x 10	Seal Material Code	O-Ring Material Code

Groove Details

Bore Diameter "A" H9	Radius	Radial Clearance "E" max			
Standard Range	"Z" max	<20 bar	<100 bar	<200 bar	<400 bar
6.00 - 13.90	0.20	0.20	0.10	0.08	0.05
14.00 - 24.90	0.20	0.25	0.15	0.10	0.07
25.00 - 45.90	0.20	0.35	0.20	0.15	0.08
46.00 - 124.90	0.40	0.50	0.25	0.20	0.10
125.00 - 180.00	0.60	0.60	0.30	0.25	0.12

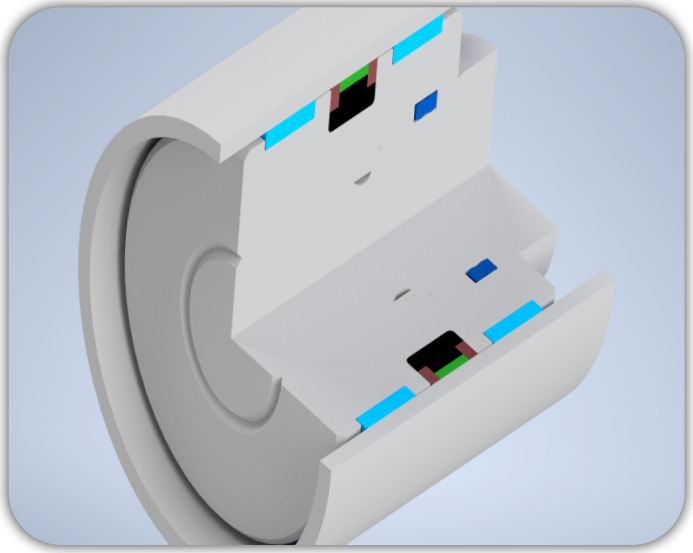

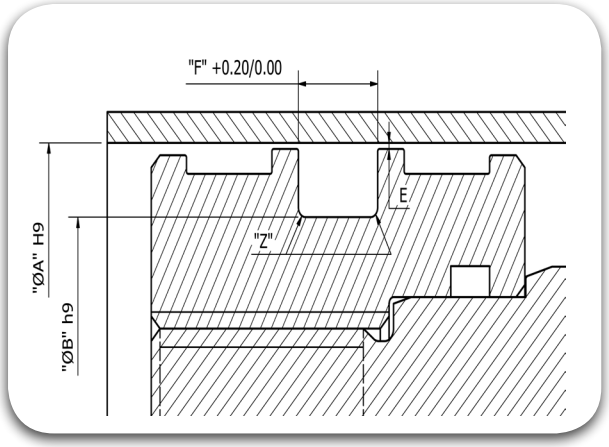

50.00

Part No	PTC 0500 0360 090					
Groove Dimension	ØA	x	ØB	x	F	
	50.00		36.00		9.00	

55.00

Part No	PTC 0550 0410 090					
Groove Dimension	ØA	x	ØB	x	F	
	55.00		41.00		9.00	

60.00

Part No	PTC 0600 0460 090					
Groove Dimension	ØA	x	ØB	x	F	
	60.00		46.00		9.00	

63.00

Part No	PTC 0630 0480 110					
Groove Dimension	ØA	x	ØB	x	F	
	63.00		48.00		11.00	

65.00

Part No	PTC 0650 0500 110					
Groove Dimension	ØA	x	ØB	x	F	
	65.00		50.00		11.00	

70.00

Part No	PTC 0700 0550 110					
Groove Dimension	ØA	x	ØB	x	F	
	70.00		55.00		11.00	

75.00

Part No	PTC 0750 0600 110					
Groove Dimension	ØA	x	ØB	x	F	
	75.00		60.00		11.00	

80.00

Part No	PTC 0800 0650 110					
Groove Dimension	ØA	x	ØB	x	F	
	80.00		65.00		11.00	

85.00

Part No	PTC 0850 0700 110					
Groove Dimension	ØA	x	ØB	x	F	
	85.00		70.00		11.00	

90.00

Part No	PTC 0900 0750 110					
Groove Dimension	ØA	x	ØB	x	F	
	90.00		75.00		11.00	

95.00

Part No	PTC 0950 0800 125					
Groove Dimension	ØA	x	ØB	x	F	
	95.00		80.00		12.50	

100.00

Part No	PTC 1000 0850 125					
Groove Dimension	ØA	x	ØB	x	F	
	100.00		85.00		12.50	

105.00

Part No	PTC 1050 0900 125					
Groove Dimension	ØA	x	ØB	x	F	
	105.00		90.00		12.50	

110.00

Part No	PTC 1100 0950 125					
Groove Dimension	ØA	x	ØB	x	F	
	110.00		95.00		12.50	

115.00

Part No	PTC 1150 1000 125					
Groove Dimension	ØA	x	ØB	x	F	
	115.00		100.00		12.50	

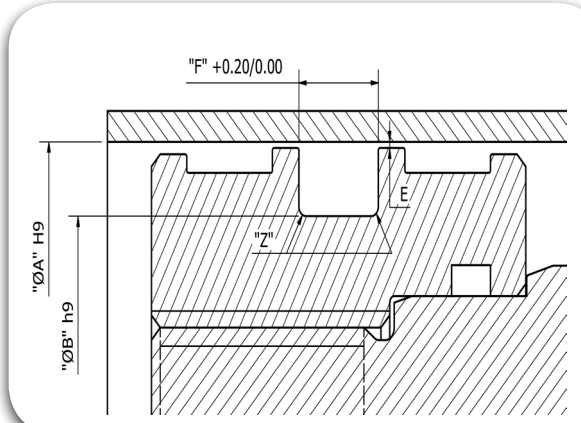

120.00

Part No	PTC 1200 1050 125					
Groove Dimension	ØA	x	ØB	x	F	
	120.00		105.00		12.50	

125.00

Part No	PTC 1250 1020 160					
Groove Dimension	ØA	x	ØB	x	F	
	125.00		102.00		16.00	

130.00

Part No	PTC 1300 1070 160					
Groove Dimension	ØA	x	ØB	x	F	
	130.00		107.00		16.00	

135.00

Part No	PTC 1350 1120 160					
Groove Dimension	ØA	x	ØB	x	F	
	135.00		112.00		16.00	

140.00

Part No	PTC 1400 1170 160					
Groove Dimension	ØA	x	ØB	x	F	
	140.00		117.00		16.00	

145.00

Part No	PTC 1450 1220 160					
Groove Dimension	ØA	x	ØB	x	F	
	145.00		122.00		16.00	

150.00

Part No	PTC 1500 1270 160					
Groove Dimension	ØA	x	ØB	x	F	
	150.00		127.00		16.00	

155.00

Part No	PTC 1550 1320 160					
Groove Dimension	ØA	x	ØB	x	F	
	155.00		132.00		16.00	

160.00

Part No	PTC 1600 1370 160					
Groove Dimension	ØA	x	ØB	x	F	
	160.00		137.00		16.00	

165.00

Part No	PTC 1650 1420 160					
Groove Dimension	ØA	x	ØB	x	F	
	165.00		142.00		16.00	

170.00

Part No	PTC 1700 1470 160					
Groove Dimension	ØA	x	ØB	x	F	
	170.00		147.00		16.00	

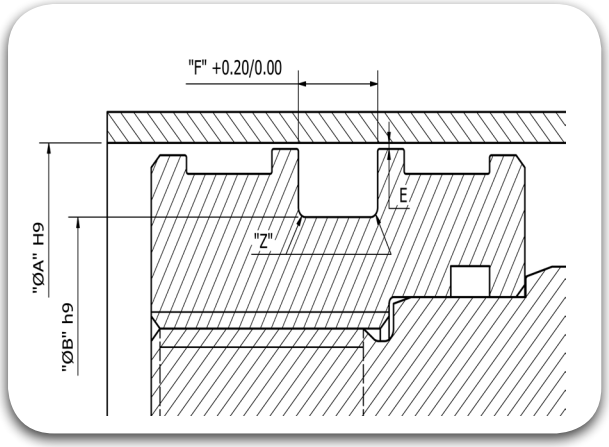

180.00

Part No	PTC 1800 1570 160					
Groove Dimension	ØA	x	ØB	x	F	
	180.00		157.00		16.00	

Piston Seals

PHC

TRIADA
TECHNOLOGIES

#SealingExcellence

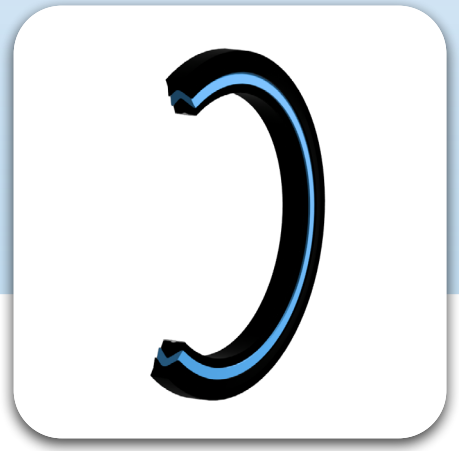
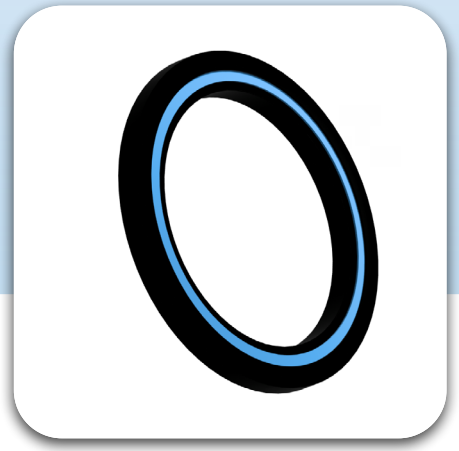

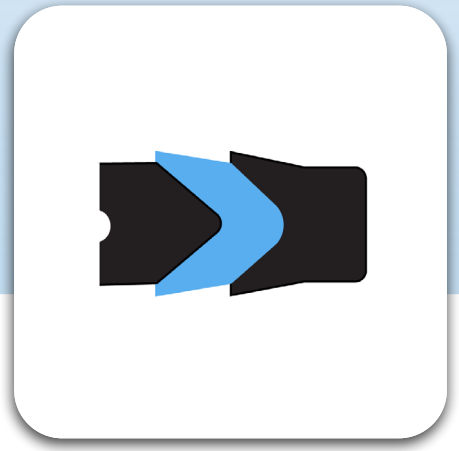

Description

The PHC Seal is a single acting piston seal consists of a rugged central element in TRIAFLEX® with fabric reinforcement, performing the main sealing function and to avoid the extrusion it is again supported by cotton fabric reinforced TRIAFLEX® Ring. To ensure a uniform preload of the seal the energizer made of TRIAMIDE® (POM) is being used at the front.

Diameter Range	Ø8.00 – Ø250.00
Standard material	Sealing element TRIAFLEX® (NBR), Support Ring is of TRIAFLEX® (compounded with cotton fabric), Energiser are TRIAMIDE® (POM)
Temperature(°C)	-40°C to 200°C (Based on Elastomer Material).
Speed	≤ 0.50 m/s
Fluids	Hydraulic fluids (Mineral Oil based), Water, Air etc, depending on Seal Compounds selected. Conditions).
Pressure	≤ 400 bar

Reciprocating | Oscillating | Rotary | Helix | Static | Single Acting | Double Acting

Material Details

Seal Material	Seal Material Code	Back-Up Ring Material	WearRing Material
TRIAFLEX® NBR	CX	TRIATEX® Polyester Elestomer	TRIAMIDE® Poly-Oxy Methylene

Nomenclature

Part No	PHC	0500	0350	115	CX
	Seal profile	Bore Dia x 10	Groove Dia x 10	Groove Width x 10	Seal Material Code

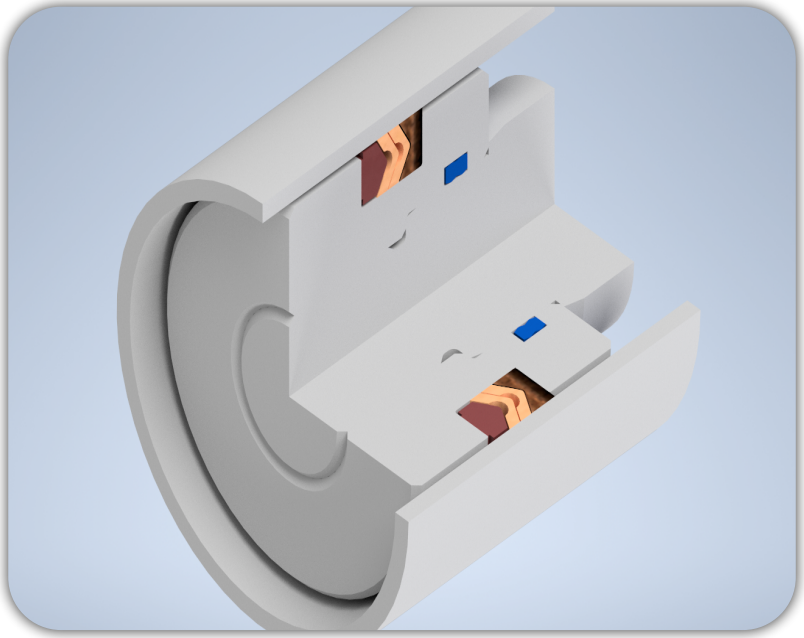

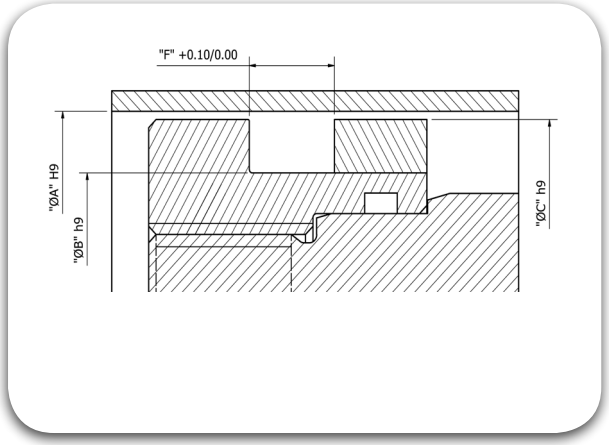

40.00

Part No	PHC 0400 0250 115			
Groove Dimension	ØA x	ØB x	ØC x	F
	40.00	25.00	39.00	11.50

50.00

Part No	PHC 0500 0350 115			
Groove Dimension	ØA x	ØB x	ØC x	F
	50.00	35.00	49.00	11.50

55.00

Part No	PHC 0550 0400 115			
Groove Dimension	ØA x	ØB x	ØC x	F
	55.00	40.00	54.00	11.50

63.00

Part No	PHC 0630 0480 130			
Groove Dimension	ØA x	ØB x	ØC x	F
	63.00	48.00	62.00	13.00

65.00

Part No	PHC 0650 0500 115			
Groove Dimension	ØA x	ØB x	ØC x	F
	65.00	50.00	64.00	11.50

80.00

Part No	PHC 0800 0600 152			
Groove Dimension	ØA x	ØB x	ØC x	F
	80.00	60.00	79.00	15.20

100.00

Part No	PHC 1000 0800 212			
Groove Dimension	ØA x	ØB x	ØC x	F
	100.00	80.00	99.00	21.20

125.00

Part No	PHC 1250 1000 258			
Groove Dimension	ØA x	ØB x	ØC x	F
	125.00	100.00	124.00	25.80

140.00

Part No	PHC 1400 1150 258			
Groove Dimension	ØA x	ØB x	ØC x	F
	140.00	115.00	139.00	25.80

160.00

Part No	PHC 1600 1300 290			
Groove Dimension	ØA x	ØB x	ØC x	F
	160.00	130.00	158.50	29.00

180.00

Part No	PHC 1800 1500 315			
Groove Dimension	ØA x	ØB x	ØC x	F
	180.00	150.00	178.50	31.50

200.00

Part No	PHC 2000 1700 335			
Groove Dimension	ØA x	ØB x	ØC x	F
	200.00	170.00	198.50	33.50

240.00

Part No	PHC 2400 2100 335			
Groove Dimension	ØA x	ØB x	ØC x	F
	240.00	210.00	238.40	33.50

250.00

Part No	PHC 2500 2200 335

Groove Dimension	ØA	x	ØB	x	ØC	x	F
	250.00		220.00		248.50		33.50

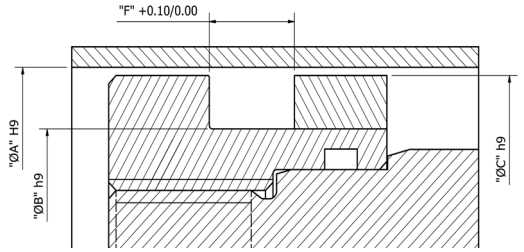

Piston Seals

PHC3

TRIADA
TECHNOLOGIES

#Sealing**Excellence**




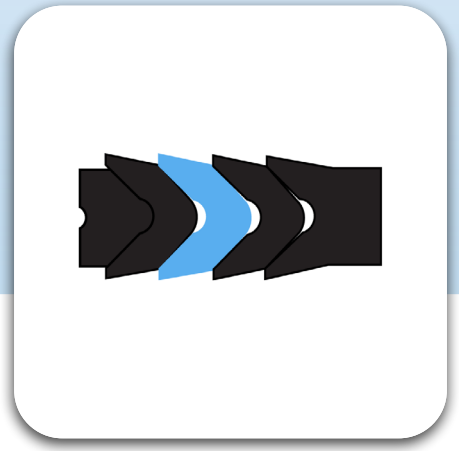

Description

The PHC3 Seal is similar to PHC seal and it is also a single acting pison seal consists of a rugged central element in TRIAFLEX® with fabric reinforcement, performing the main sealing function and to avoid the extrusion it is again supported by two cotton fabric reinforced TRIAFLEX® Ring. To ensure a uniform preload of the seal the energizer made of TRIAMIDE® (POM) is being used at the front which is again supported by TRIAFLEX®material.

Diameter Range	Ø20.00 – Ø280.00
Standard material	Sealing element TRIAFLEX® (NBR), Support Ring is of TRIAFLEX® (compounded with cotton fabric), Energiser are TRIAMIDE® (POM)
Temperature(°C)	-40ºC to 200ºC (Based on Elastomer Material)
Speed	≤ 0.50 m/s
Fluids	Hydraulic fluids (Mineral Oil based).
Pressure	≤ 400 bar

Reciprocating | Oscillating | Rotary | Helix | Static | Single Acting | Double Acting

Material Details

Seal Material	Seal Material Code	BackUp Ring Material	WearRing Material
TRIAFLEX® NBR	CX	TRIATEX® Polyester Elestomer	TRIAMIDE® Poly-Oxy Methylene

Nomenclature

Part No	PHC3	0500	0350	115	CX
	Seal profile	Bore Dia x 10	Groove Dia x 10	Groove Width x 10	Seal Material Code

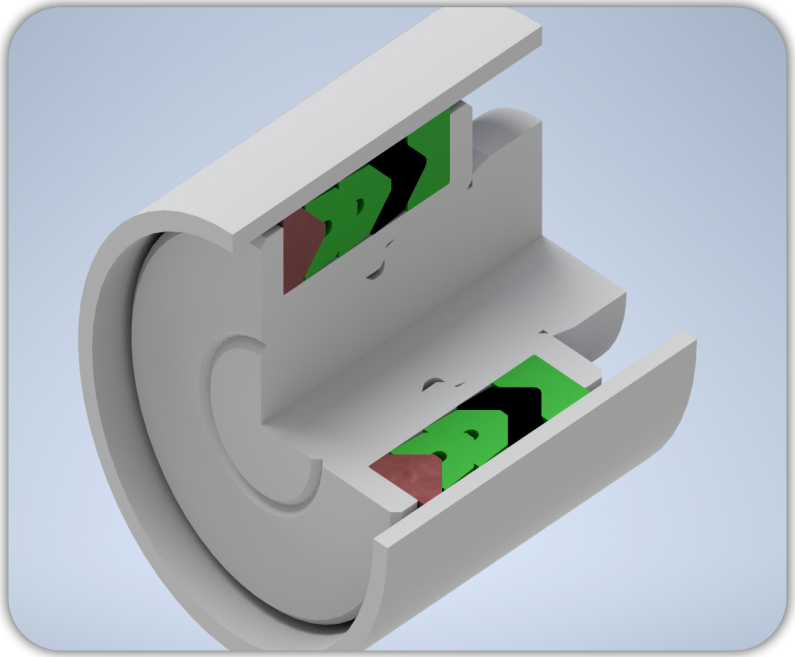

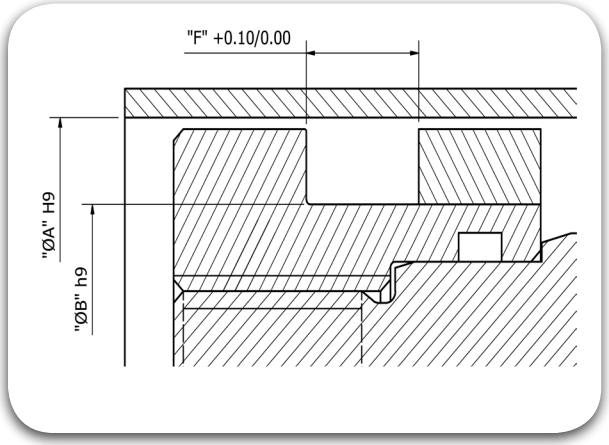

95.25

Part No	PHC3 0952 0825 217		
Groove Dimension	ØA	ØB	F
	95.25	82.55	21.72

107.95

Part No	PHC3 1079 0889 310		
Groove Dimension	ØA	ØB	F
	107.95	88.90	31.00

114.30

Part No	PHC3 1143 0889 353		
Groove Dimension	ØA	ØB	F
	114.30	88.90	35.32

114.30

Part No	PHC3 1143 0952 254		
Groove Dimension	ØA	ØB	F
	114.30	95.25	25.40

114.30

Part No	PHC3 1143 0984 265		
Groove Dimension	ØA	ØB	F
	114.30	98.42	26.59

127.00

Part No	PHC3 1270 1016 321		
Groove Dimension	ØA	ØB	F
	127.00	101.60	32.15

127.00

Part No	PHC3 1270 1079 300		
Groove Dimension	ØA	ØB	F
	127.00	107.95	30.00

150.00

Part No	PHC3 1500 1200 440		
Groove Dimension	ØA	ØB	F
	150.00	120.00	44.00

152.40

Part No	PHC3 1524 1270 386		
Groove Dimension	ØA	ØB	F
	152.40	127.00	38.63

210.00

Part No	PHC3 2100 1800 329		
Groove Dimension	ØA	ØB	F
	210.00	180.00	32.97

222.25

Part No	PHC3 2222 1900 500		
Groove Dimension	ØA	ØB	F
	222.25	190.00	50.00

280.00

Part No	PHC3 2800 2500 329		
Groove Dimension	ØA	ØB	F
	280.00	250.00	32.97

Piston Seals

PSM

TRIADA
TECHNOLOGIES

#SealingExcellence




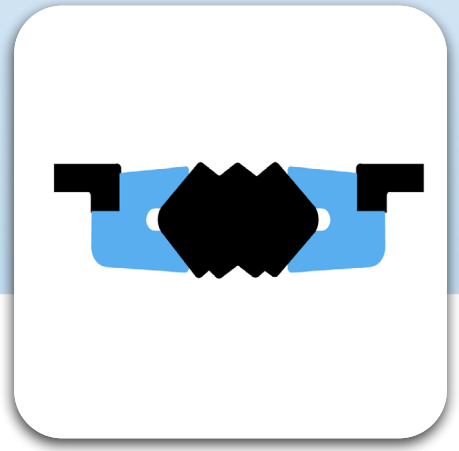

Description

The PSM Compact Seal is a double acting piston seal consists of a rugged central element in TRIAFLEX®, performing the main sealing function and supported by two slit U-cup Rings and two slit Wear Rings, which positions the Piston centrally within the Cylinder bore. These Back-Up Rings limits the extrusion of the TRIAFLEX® Sealing Element and the Wear Rings takes the responsibility of the radial loads.

Diameter Range	Ø45.00 – Ø360.00
Standard material	TRIAMIDE® (Acetal Resin) Wear Rings/ TRIAFLEX® T571 (NBR)Sealing Element / TRIAFLEX® T543 (Fabric Reinforced Nitrile) Support Rings.
Temperature(°C)	-30° C to 130° C
Speed	≤ 0.50 m/s
Fluids	Hydraulic fluids (Mineral Oil based), Water, Air etc. depending on Seal Compounds selected.
Pressure	≤ 400 bar

Reciprocating | Oscillating | Rotary | Helix | Static | Single Acting | Double Acting

Material Details

Seal Material	Seal Material Code	Support Ring Material	WearRing Material
TRIAFLEX® T571 NBR 70	CXN	TRIATEX® T543 Fabric Reinforced Nitrile	TRIAMIDE® T485 Poly-Oxy Methylene

Nomenclature

Part No	PSM	0500	0350	115	CXN
	Seal profile	Bore Dia x 10	Groove Dia x 10	Groove Width x 10	Seal Material Code

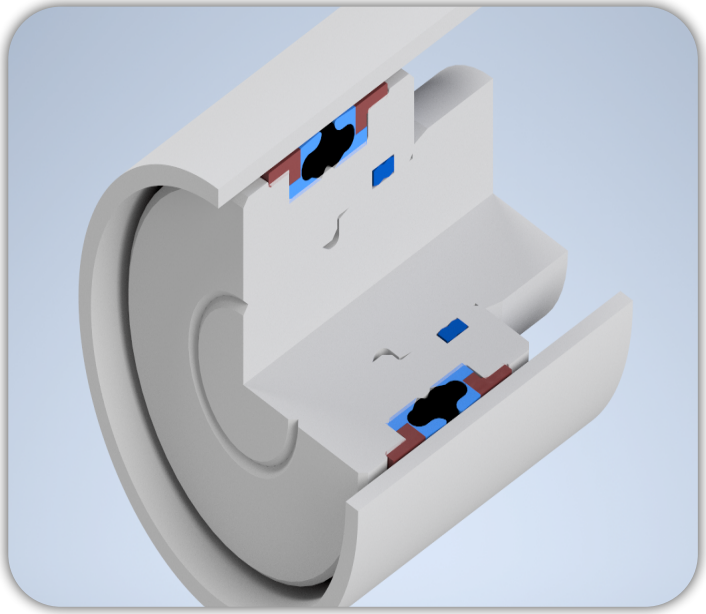

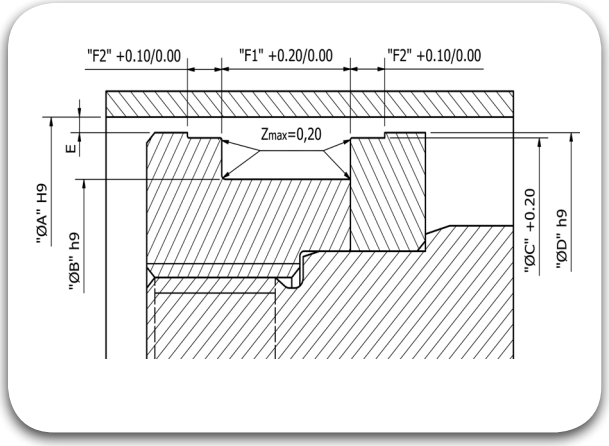

45.00

Part No	PSM 0450 0290 320					
Groove Dimension	ØA	x	ØB	x	F1	
	45.00		29.00		32.00	
	F2	x	ØC	x	ØD	
	6.35		38.80		42.80	

50.00

Part No	PSM 0500 0340 320					
Groove Dimension	ØA	x	ØB	x	F1	
	50.00		34.00		32.00	
	F2	x	ØC	x	ØD	
	6.35		43.77		47.80	

55.00

Part No	PSM 0550 0400 320					
Groove Dimension	ØA	x	ØB	x	F1	
	55.00		40.00		32.00	
	F2	x	ØC	x	ØD	
	6.35		48.77		52.80	

60.00

Part No	PSM 0600 0440 320					
Groove Dimension	ØA	x	ØB	x	F1	
	60.00		44.00		32.00	
	F2	x	ØC	x	ØD	
	6.35		53.80		57.80	

63.00

Part No	PSM 0630 0470 320					
Groove Dimension	ØA	x	ØB	x	F1	
	63.00		47.00		32.00	
	F2	x	ØC	x	ØD	
	6.35		56.74		60.80	

63.50

Part No	PSM 0635 0476 317					
Groove Dimension	ØA	x	ØB	x	F1	
	63.50		47.62		31.75	
	F2	x	ØC	x	ØD	
	6.35		57.25		61.30	

65.00

Part No	PSM 0650 0490 320					
Groove Dimension	ØA	x	ØB	x	F1	
	65.00		49.00		32.00	
	F2	x	ØC	x	ØD	
	6.35		58.70		62.80	

70.00

Part No	PSM 0700 0500 350					
Groove Dimension	ØA	x	ØB	x	F1	
	70.00		50.00		35.00	
	F2	x	ØC	x	ØD	
	9.52		62.62		67.50	

75.00

Part No	PSM 0750 0550 350					
Groove Dimension	ØA	x	ØB	x	F1	
	75.00		55.00		35.00	
	F2	x	ØC	x	ØD	
	9.52		67.70		72.50	

80.00

Part No	PSM 0800 0600 350					
Groove Dimension	ØA	x	ØB	x	F1	
	80.00		60.00		35.00	
	F2	x	ØC	x	ØD	
	9.52		72.62		77.50	

80.00

Part No	PSM 0800 0640 320					
Groove Dimension	ØA	x	ØB	x	F1	
	80.00		64.00		32.00	
	F2	x	ØC	x	ØD	
	9.52		72.62		77.50	

85.00

Part No	PSM 0850 0650 350					
Groove Dimension	ØA	x	ØB	x	F1	
	85.00		65.00		35.00	
	F2	x	ØC	x	ØD	
	9.52		77.62		82.50	

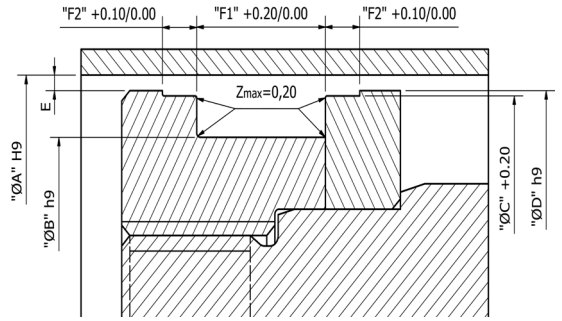

90.00

Part No	PSM 0900 0700 350					
Groove Dimension	ØA	x	ØB	x	F1	
	90.00		70.00		35.00	
	F2	x	ØC	x	ØD	
	9.52		82.58		87.80	

90.00

Part No	PSM 0900 0740 320					
Groove Dimension	ØA	x	ØB	x	F1	
	90.00		74.00		32.00	
	F2	x	ØC	x	ØD	
	9.52		82.87		87.80	

92.07

Part No	PSM 0920 0730 349					
Groove Dimension	ØA	x	ØB	x	F1	
	92.07		73.02		34.92	
	F2	x	ØC	x	ØD	
	9.52		$4.66		89.60	

95.25

Part No	PSM 0952 0762 349					
Groove Dimension	ØA	x	ØB	x	F1	
	95.25		76.20		34.92	
	F2	x	ØC	x	ØD	
	9.52		87.86		92.80	

95.00

Part No	PSM 0950 0750 350					
Groove Dimension	ØA	x	ØB	x	F1	
	95.00		75.00		35.00	
	F2	x	ØC	x	ØD	
	9.52		87.60		92.50	

100.00

Part No	PSM 1000 0800 350					
Groove Dimension	ØA	x	ØB	x	F1	
	100.00		80.00		35.00	
	F2	x	ØC	x	ØD	
	9.52		92.60		97.50	

101.60

Part No	PSM 1016 0825 349					
Groove Dimension	ØA	x	ØB	x	F1	
	101.60		82.55		34.92	
	F2	x	ØC	x	ØD	
	9.52		94.20		99.10	

105.00

Part No	PSM 1050 0850 350					
Groove Dimension	ØA	x	ØB	x	F1	
	105.00		85.00		35.00	
	F2	x	ØC	x	ØD	
	9.52		97.60		102.50	

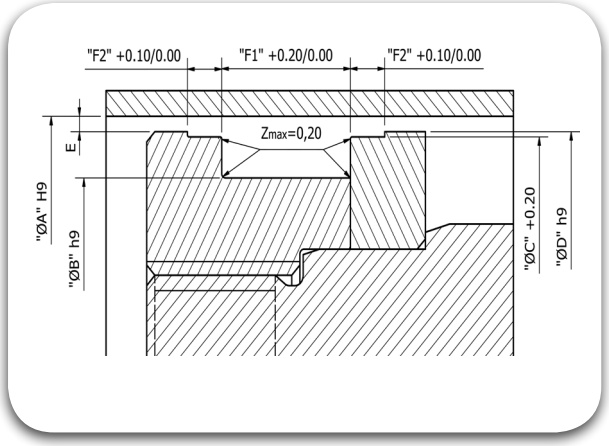

110.00

Part No	PSM 1100 0850 450					
Groove Dimension	ØA	x	ØB	x	F1	
	110.00		85.00		45.00	
	F2	x	ØC	x	ØD	
	12.70		101.82		107.30	

110.00

Part No	PSM 1100 0900 350					
Groove Dimension	ØA	x	ØB	x	F1	
	110.00		90.00		35.00	
	F2	x	ØC	x	ØD	
	9.52		102.70		107.50	

114.30

Part No	PSM 1143 0889 444					
Groove Dimension	ØA	x	ØB	x	F1	
	114.30		88.90		44.45	
	F2	x	ØC	x	ØD	
	12.70		106.12		111.60	

115.00

Part No	PSM 1150 0900 450					
Groove Dimension	ØA	x	ØB	x	F1	
	115.00		90.00		45.00	
	F2	x	ØC	x	ØD	
	12.70		106.82		112.30	

120.00

Part No	PSM 1200 0950 450					
Groove Dimension	ØA	x	ØB	x	F1	
	120.00		95.00		45.00	
	F2	x	ØC	x	ØD	
	12.70		111.82		117.30	

120.00

Part No	PSM 1200 1000 350					
Groove Dimension	ØA	x	ØB	x	F1	
	120.00		100.00		35.00	
	F2	x	ØC	x	ØD	
	9.52		112.80		117.50	

125.00

Part No	PSM 1250 1000 450					
Groove Dimension	ØA	x	ØB	x	F1	
	125.00		100.00		45.00	
	F2	x	ØC	x	ØD	
	12.70		116.82		122.30	

127.00

Part No	PSM 1270 1016 444					
Groove Dimension	ØA	x	ØB	x	F1	
	127.00		101.60		44.45	
	F2	x	ØC	x	ØD	
	12.70		118.80		124.30	

130.00

Part No	PSM 1300 1050 450					
Groove Dimension	ØA	x	ØB	x	F1	
	130.00		105.00		45.00	
	F2	x	ØC	x	ØD	
	12.70		121.82		127.30	

130.00

Part No	PSM 1300 1100 350					
Groove Dimension	ØA	x	ØB	x	F1	
	130.00		110.00		35.00	
	F2	x	ØC	x	ØD	
	9.52		122.70		127.30	

135.00

Part No	PSM 1350 1100 450		
Groove Dimension	ØA	ØB	F1
	135.00	110.00	45.00
	F2	ØC	ØD
	12.70	126.82	132.30

139.70

Part No	PSM 1397 1143 444		
Groove Dimension	ØA	ØB	F1
	139.70	114.30	44.45
	F2	ØC	ØD
	12.70	131.47	137.00

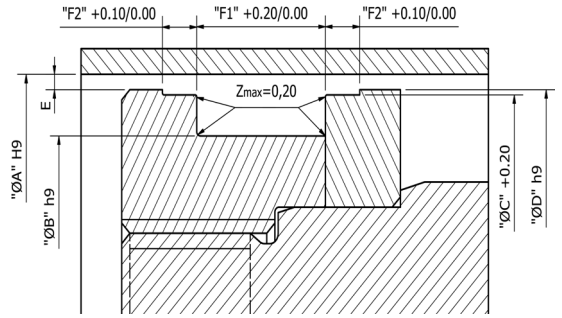

140.00

Part No	PSM 1400 1150 450		
Groove Dimension	ØA	ØB	F1
	140.00	115.00	45.00
	F2	ØC	ØD
	12.70	131.72	137.30

140.00

Part No	PSM 1400 1200 350		
Groove Dimension	ØA	ØB	F1
	140.00	120.00	35.00
	F2	ØC	ØD
	12.70	132.70	137.30

145.00

Part No	PSM 1450 1200 450		
Groove Dimension	ØA	ØB	F1
	145.00	120.00	45.00
	F2	ØC	ØD
	12.70	136.72	142.30

150.00

Part No	PSM 1500 1250 450		
Groove Dimension	ØA	ØB	F1
	150.00	125.00	45.00
	F2	ØC	ØD
	12.70	141.72	147.30

152.40

Part No	PSM 1524 1270 444		
Groove Dimension	ØA	ØB	F1
	152.40	127.00	44.45
	F2	ØC	ØD
	12.70	144.15	149.70

160.00

Part No	PSM 1600 1350 450		
Groove Dimension	ØA	ØB	F1
	160.00	135.00	45.00
	F2	ØC	ØD
	12.70	151.72	157.10

165.00

Part No	PSM 1650 1350 450		
Groove Dimension	ØA	ØB	F1
	165.00	135.00	45.00
	F2	ØC	ØD
	12.70	158.00	162.10

170.00

Part No	PSM 1700 1400 450		
Groove Dimension	ØA	ØB	F1
	170.00	140.00	45.00
	F2	ØC	ØD
	12.70	163.00	167.90

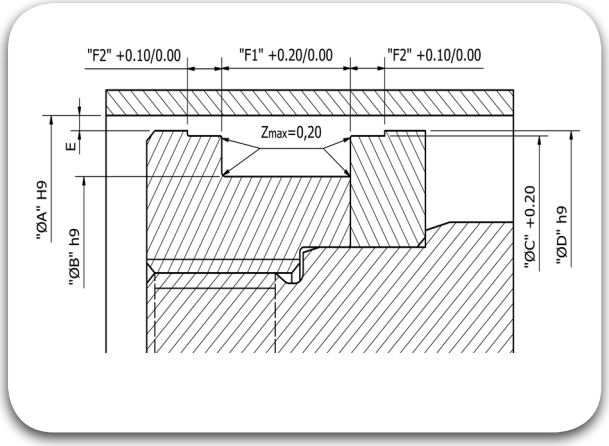

177.80

Part No	PSM 1778 1524 444		
Groove Dimension	ØA 177.80	ØB 152.40	F1 44.45
	F2 12.70	ØC 169.55	ØD 175.10

180.00

Part No	PSM 1800 1550 450		
Groove Dimension	ØA 180.00	ØB 155.00	F1 45.00
	F2 12.70	ØC 171.60	ØD 177.10

185.00

Part No	PSM 1850 1600 450		
Groove Dimension	ØA 185.00	ØB 160.00	F1 45.00
	F2 12.70	ØC 176.72	ØD 182.10

190.00

Part No	PSM 1900 1650 450		
Groove Dimension	ØA 190.00	ØB 165.00	F1 45.00
	F2 12.70	ØC 181.72	ØD 187.10

200.00

Part No	PSM 2000 1750 450		
Groove Dimension	ØA 200.00	ØB 175.00	F1 45.00
	F2 12.70	ØC 191.72	ØD 197.10

210.00

Part No	PSM 2100 1850 450		
Groove Dimension	ØA 210.00	ØB 185.00	F1 45.00
	F2 12.70	ØC 201.72	ØD 207.10

220.00

Part No	PSM 2200 1950 450		
Groove Dimension	ØA 220.00	ØB 195.00	F1 45.00
	F2 12.70	ØC 211.72	ØD 217.10

230.00

Part No	PSM 2300 2050 450		
Groove Dimension	ØA 230.00	ØB 205.00	F1 45.00
	F2 12.70	ØC 221.72	ØD 227.10

240.00

Part No	PSM 2400 2150 450		
Groove Dimension	ØA 240.00	ØB 215.00	F1 45.00
	F2 12.70	ØC 231.72	ØD 237.10

250.00

Part No	PSM 2500 2250 450		
Groove Dimension	ØA 250.00	ØB 225.00	F1 45.00
	F2 12.70	ØC 241.72	ØD 247.10

260.00

Part No	PSM 2600 2350 450					
Groove Dimension	ØA	x	ØB	x	F1	
	260.00		235.00		45.00	
	F2	x	ØC	x	ØD	
	12.70		251.72		257.10	

270.00

Part No	PSM 2700 2450 450					
Groove Dimension	ØA	x	ØB	x	F1	
	270.00		245.00		45.00	
	F2	x	ØC	x	ØD	
	12.70		261.72		267.10	

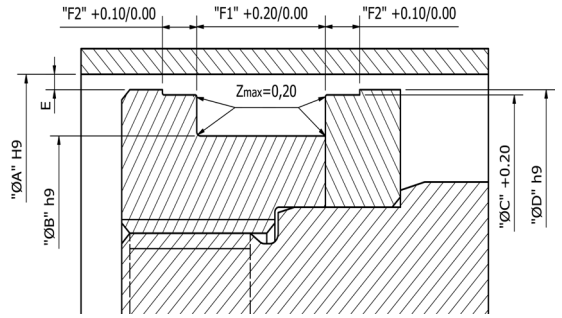

280.00

Part No	PSM 2800 2550 450					
Groove Dimension	ØA	x	ØB	x	F1	
	280.00		255.00		45.00	
	F2	x	ØC	x	ØD	
	12.70		271.72		277.10	

290.00

Part No	PSM 2900 2650 450					
Groove Dimension	ØA	x	ØB	x	F1	
	290.00		265.00		45.00	
	F2	x	ØC	x	ØD	
	12.70		281.72		287.10	

300.00

Part No	PSM 3000 2750 450					
Groove Dimension	ØA	x	ØB	x	F1	
	300.00		275.00		45.00	
	F2	x	ØC	x	ØD	
	12.70		291.72		297.10	

360.00

Part No	PSM 3600 3350 444					
Groove Dimension	ØA	x	ØB	x	F1	
	360.00		335.00		44.45	
	F2	x	ØC	x	ØD	
	12.70		351.76		357.30	

Piston Seals

PUA

TRIADA
TECHNOLOGIES

#SealingExcellence




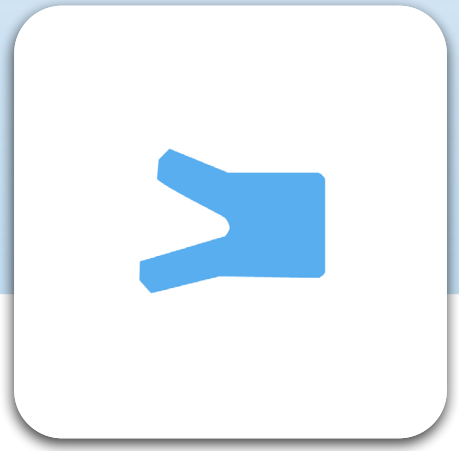

Description

The PUA is a single acting Piston U-Cup, the trimmed sealing lip provides an excellent static and dynamic tightness, the taper behind the lip reduces friction at the dynamic surface.

Diameter Range	Ø10.00 – Ø2500.00
Standard material	TRIATHANE® T479 (Polyurethane)
Temperature(°C)	-35ºC to 110ºC
Speed	≤ 0.50 m/s
Fluids	Hydraulic fluids (Mineral Oil based), Water, Air etc depending on Seal Compounds selected.
Pressure	≤ 400 bar

Reciprocating · Oscillating · Rotary · Helix · Static · Single Acting · Double Acting

Material Details

Seal Material	Seal Material Code
TRIATHANE® Polyurethane	T479
TRIAFLEX® NBR 90 Shore A	T591

Nomenclature

Part No	PUA	0120	0050	060	T479
	Seal profile	Bore Dia x 10	Groove Dia x 10	Groove Width x 10	Seal Material Code

Groove Details

Operating Pressure Bar	Radial Clearance "E" max	
	ØA < 60mm	ØA > 60mm
50	0.40	0.50
100	0.30	0.40
200	0.20	0.30
300	0.15	0.20
400	0.10	0.15

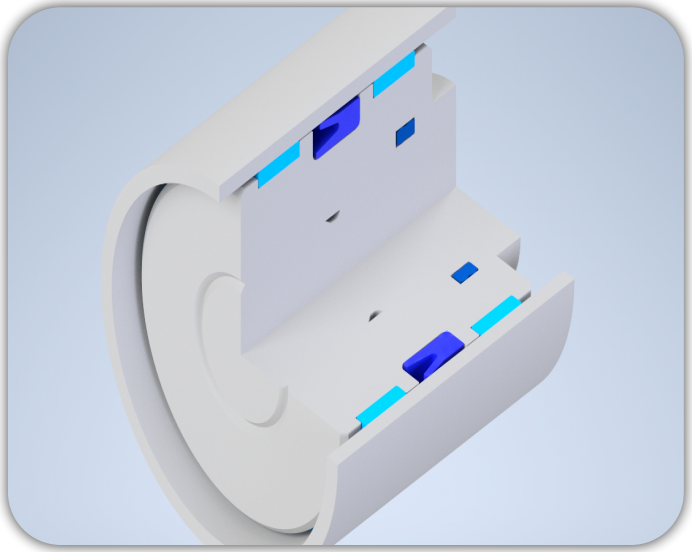

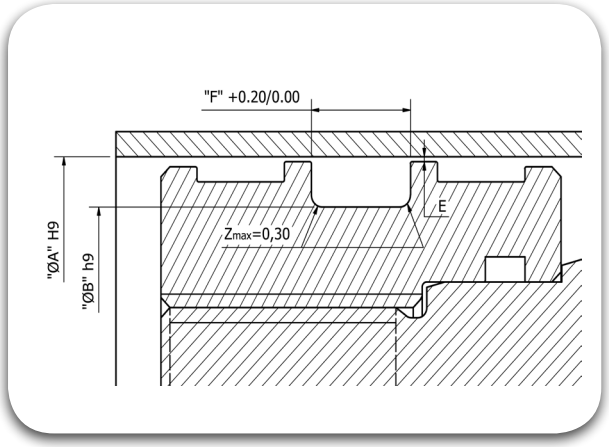

12.00

Part No	PUA 0120 0050 060			
Groove Dimension	ØA	ØB	ØC	F
	12.00	5.00	8.00	6.00

14.00

Part No	PUA 0140 0080 068			
Groove Dimension	ØA	ØB	ØC	F
	14.00	8.00	11.00	6.80

16.00

Part No	PUA 0160 0100 065			
Groove Dimension	ØA	ØB	ØC	F
	16.00	10.00	13.00	6.50

16.00

Part No	PUA 0160 0100 090			
Groove Dimension	ØA	ØB	ØC	F
	16.00	10.00	13.00	9.00

20.00

Part No	PUA 0200 0120 075			
Groove Dimension	ØA	ØB	ØC	F
	20.00	12.00	15.00	7.50

20.00

Part No	PUA 2000 0140 060			
Groove Dimension	ØA	ØB	ØC	F
	20.00	14.00	17.00	6.00

22.00

Part No	PUA 0220 0120 090			
Groove Dimension	ØA	ØB	ØC	F
	22.00	12.00	16.00	9.00

25.00

Part No	PUA 0250 0100 110			
Groove Dimension	ØA	ØB	ØC	F
	25.00	10.00	14.00	11.00

25.00

Part No	PUA 0250 0150 090			
Groove Dimension	ØA	ØB	ØC	F
	25.00	15.00	19.00	9.00

30.00

Part No	PUA 0300 0150 105			
Groove Dimension	ØA	ØB	ØC	F
	30.00	15.00	19.00	10.50

30.00

Part No	PUA 0300 0150 110			
Groove Dimension	ØA	ØB	ØC	F
	30.00	15.00	19.00	11.00

30.00

Part No	PUA 0300 0200 090			
Groove Dimension	ØA	ØB	ØC	F
	30.00	20.00	24.00	9.00

30.00

Part No	PUA 0300 0220 070			
Groove Dimension	ØA	ØB	ØC	F
	30.00	22.00	26.00	7.00

32.00

Part No	PUA 0320 0220 090
Groove Dimension	ØA x ØB x ØC x F
	32.00 x 22.00 x 26.00 x 9.00

32.00

Part No	PUA 0320 0220 100
Groove Dimension	ØA x ØB x ØC x F
	32.00 x 22.00 x 26.00 x 10.00

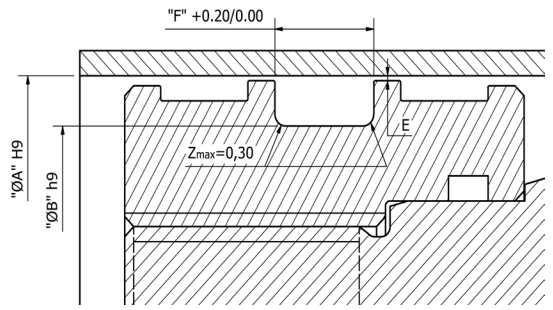

32.00

Part No	PUA 0320 0260 060
Groove Dimension	ØA x ØB x ØC x F
	32.00 x 26.00 x 28.00 x 6.00

34.00

Part No	PUA 0340 0220 094
Groove Dimension	ØA x ØB x ØC x F
	34.00 x 22.00 x 26.00 x 9.40

34.00

Part No	PUA 0340 0220 100
Groove Dimension	ØA x ØB x ØC x F
	34.00 x 22.00 x 26.00 x 10.00

34.00

Part No	PUA 0340 0280 040
Groove Dimension	ØA x ØB x ØC x F
	34.00 x 28.00 x 31.00 x 4.00

35.00

Part No	PUA 0350 0200 110
Groove Dimension	ØA x ØB x ØC x F
	35.00 x 20.00 x 25.00 x 11.00

35.00

Part No	PUA 0350 0250 090
Groove Dimension	ØA x ØB x ØC x F
	35.00 x 25.00 x 29.00 x 9.00

35.00

Part No	PUA 0350 0270 110
Groove Dimension	ØA x ØB x ØC x F
	35.00 x 27.00 x 31.00 x 11.00

36.00

Part No	PUA 0360 0240 070
Groove Dimension	ØA x ØB x ØC x F
	36.00 x 24.00 x 28.00 x 7.00

37.00

Part No	PUA 0370 0210 130
Groove Dimension	ØA x ØB x ØC x F
	37.00 x 21.00 x 25.00 x 13.00

38.00

Part No	PUA 0380 0310 052
Groove Dimension	ØA x ØB x ØC x F
	38.00 x 31.00 x 34.00 x 5.20

40.00

Part No	PUA 0400 0250 110
Groove Dimension	ØA x ØB x ØC x F
	40.00 x 25.00 x 30.00 x 11.00

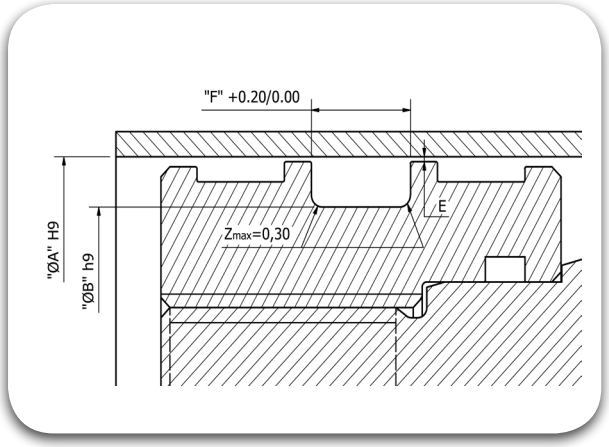

40.00

Part No	PUA 0400 0300 075			
Groove Dimension	ØA	ØB	ØC	F
	40.00	30.00	34.00	7.50

40.00

Part No	PUA 0400 0300 110			
Groove Dimension	ØA	ØB	ØC	F
	40.00	30.00	34.00	11.00

40.00

Part No	PUA 0400 0320 065			
Groove Dimension	ØA	ØB	ØC	F
	40.00	32.00	36.00	6.50

40.00

Part No	PUA 0400 0320 090			
Groove Dimension	ØA	ØB	ØC	F
	40.00	32.00	36.00	9.00

40.00

Part No	PUA 0400 0330 090			
Groove Dimension	ØA	ØB	ØC	F
	40.00	33.00	36.00	9.00

42.00

Part No	PUA 0420 0320 110			
Groove Dimension	ØA	ØB	ØC	F
	42.00	32.00	36.00	11.00

42.00

Part No	PUA 0420 0345 047			
Groove Dimension	ØA	ØB	ØC	F
	42.00	34.50	38.00	4.70

43.00

Part No	PUA 0430 0250 100			
Groove Dimension	ØA	ØB	ØC	F
	43.00	25.00	29.00	10.00

44.00

Part No	PUA 0440 0200 120			
Groove Dimension	ØA	ØB	ØC	F
	44.00	20.00	25.00	12.00

44.00

Part No	PUA 0440 0250 120			
Groove Dimension	ØA	ØB	ØC	F
	44.00	25.00	30.00	12.00

45.00

Part No	PUA 0450 0285 130			
Groove Dimension	ØA	ØB	ØC	F
	45.00	28.50	33.00	13.00

45.00

Part No	PUA 0450 0300 110			
Groove Dimension	ØA	ØB	ØC	F
	45.00	30.00	35.00	11.00

50.00

Part No	PUA 0500 0300 120			
Groove Dimension	ØA	ØB	ØC	F
	50.00	30.00	35.00	13.00

50.00

Part No	PUA 0500 0320 110			
Groove Dimension	ØA x 50.00	ØB x 32.00	ØC x 37.00	F 11.00

50.00

Part No	PUA 0500 0350 095			
Groove Dimension	ØA x 50.00	ØB x 35.00	ØC x 40.00	F 9.50

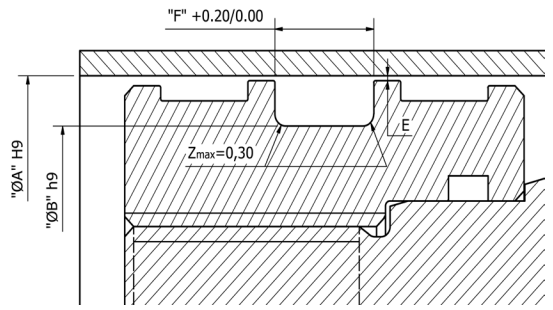

50.00

Part No	PUA 0500 0350 110			
Groove Dimension	ØA x 50.00	ØB x 35.00	ØC x 40.00	F 11.00

50.00

Part No	PUA 0500 0400 055			
Groove Dimension	ØA x 50.00	ØB x 40.00	ØC x 44.00	F 5.50

50.00

Part No	PUA 0500 0400 090			
Groove Dimension	ØA x 50.00	ØB x 40.00	ØC x 44.00	F 9.00

50.00

Part No	PUA 0500 0400 110			
Groove Dimension	ØA x 50.00	ØB x 40.00	ØC x 44.00	F 11.00

50.00

Part No	PUA 0500 0420 060			
Groove Dimension	ØA x 50.00	ØB x 42.00	ØC x 45.00	F 6.00

50.00

Part No	PUA 0500 0420 090			
Groove Dimension	ØA x 50.00	ØB x 42.00	ØC x 45.00	F 9.00

50.00

Part No	PUA 0500 0420 110			
Groove Dimension	ØA x 50.00	ØB x 42.00	ØC x 45.00	F 11.00

50.80

Part No	PUA 0508 0408 080			
Groove Dimension	ØA x 50.80	ØB x 40.80	ØC x 45.00	F 8.00

52.00

Part No	PUA 0520 0420 065			
Groove Dimension	ØA x 52.00	ØB x 42.00	ØC x 46.00	F 6.50

52.00

Part No	PUA 0520 0420 106			
Groove Dimension	ØA x 52.00	ØB x 42.00	ØC x 46.00	F 10.60

55.00

Part No	PUA 0550 0400 110			
Groove Dimension	ØA x 55.00	ØB x 40.00	ØC x 45.00	F 11.00

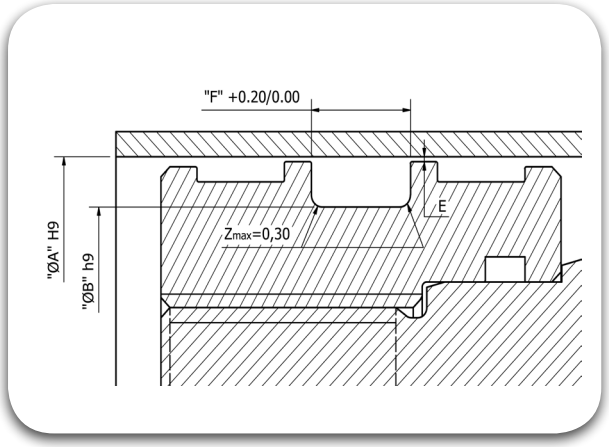

55.00

Part No	PUA 0550 0450 110			
Groove Dimension	ØA	ØB	ØC	F
	55.00	45.00	48.00	11.00

55.00

Part No	PUA 0550 0470 063			
Groove Dimension	ØA	ØB	ØC	F
	55.00	47.00	50.00	6.30

60.00

Part No	PUA 0600 0400 110			
Groove Dimension	ØA	ØB	ØC	F
	60.00	40.00	45.00	11.00

60.00

Part No	PUA 0600 0400 130			
Groove Dimension	ØA	ØB	ØC	F
	60.00	40.00	45.00	13.00

60.00

Part No	PUA 0600 0400 145			
Groove Dimension	ØA	ØB	ØC	F
	60.00	40.00	45.00	14.50

60.00

Part No	PUA 0600 0450 110			
Groove Dimension	ØA	ØB	ØC	F
	60.00	45.00	50.00	11.00

60.00

Part No	PUA 0600 0500 055			
Groove Dimension	ØA	ØB	ØC	F
	60.00	50.00	54.00	5.50

60.00

Part No	PUA 0600 0500 080			
Groove Dimension	ØA	ØB	ØC	F
	60.00	50.00	54.00	8.00

60.00

Part No	PUA 0600 0500 110			
Groove Dimension	ØA	ØB	ØC	F
	60.00	50.00	54.00	11.00

60.00

Part No	PUA 0600 0520 080			
Groove Dimension	ØA	ØB	ØC	F
	60.00	52.00	55.00	9.00

63.00

Part No	PUA 0630 0430 130			
Groove Dimension	ØA	ØB	ØC	F
	63.00	43.00	47.00	13.00

63.00

Part No	PUA 0630 0450 110			
Groove Dimension	ØA	ØB	ØC	F
	63.00	45.00	50.00	11.00

63.00

Part No	PUA 0630 0450 130			
Groove Dimension	ØA	ØB	ØC	F
	63.00	45.00	50.00	13.00

63.00

Part No	PUA 0630 0480 095
Groove Dimension	ØA x ØB x ØC x F
	63.00 x 48.00 x 53.00 x 9.50

63.00

Part No	PUA 0630 0480 110
Groove Dimension	ØA x ØB x ØC x F
	63.00 x 48.00 x 53.00 x 11.00

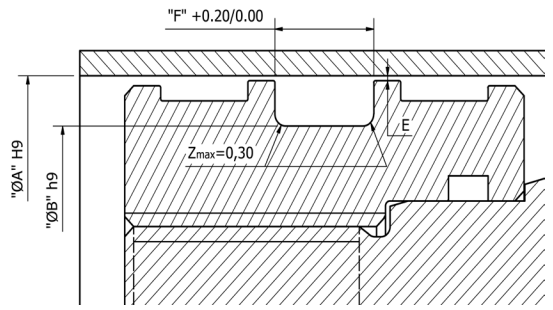

63.00

Part No	PUA 0630 0480 130
Groove Dimension	ØA x ØB x ØC x F
	63.00 x 48.00 x 53.00 x 13.00

63.00

Part No	PUA 0630 0530 070
Groove Dimension	ØA x ØB x ØC x F
	63.00 x 53.00 x 57.00 x 7.00

63.00

Part No	PUA 0630 0530 080
Groove Dimension	ØA x ØB x ØC x F
	63.00 x 53.00 x 57.00 x 8.00

63.00

Part No	PUA 0630 0530 130
Groove Dimension	ØA x ØB x ØC x F
	63.00 x 53.00 x 57.00 x 13.00

65.00

Part No	PUA 0650 0450 130
Groove Dimension	ØA x ØB x ØC x F
	65.00 x 45.00 x 50.00 x 13.00

65.00

Part No	PUA 0650 0450 145
Groove Dimension	ØA x ØB x ØC x F
	65.00 x 45.00 x 50.00 x 14.50

65.00

Part No	PUA 0650 0500 110
Groove Dimension	ØA x ØB x ØC x F
	65.00 x 50.00 x 55.00 x 11.00

65.00

Part No	PUA 0650 0500 125
Groove Dimension	ØA x ØB x ØC x F
	65.00 x 50.00 x 55.00 x 12.50

65.00

Part No	PUA 0650 0550 110
Groove Dimension	ØA x ØB x ØC x F
	65.00 x 55.00 x 59.00 x 11.00

65.00

Part No	PUA 0650 0550 145
Groove Dimension	ØA x ØB x ØC x F
	65.00 x 55.00 x 59.00 x 14.50

68.00

Part No	PUA 0680 0480 110
Groove Dimension	ØA x ØB x ØC x F
	68.00 x 48.00 x 53.00 x 11.00

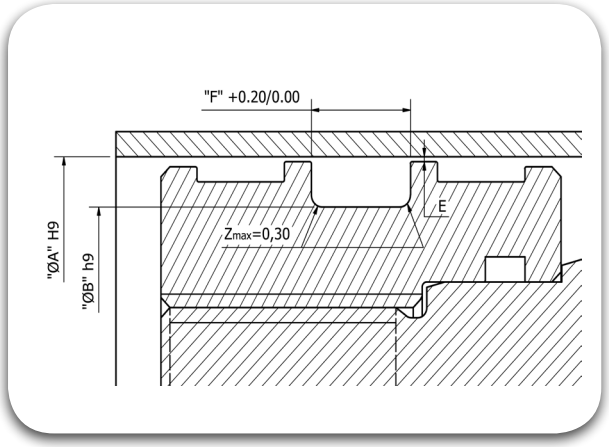

70.00

Part No	PUA 0700 0500 130			
Groove Dimension	ØA	ØB	ØC	F
	70.00	50.00	55.00	13.00

70.00

Part No	PUA 0700 0500 145			
Groove Dimension	ØA	ØB	ØC	F
	70.00	50.00	55.00	14.50

70.00

Part No	PUA 0700 0500 160			
Groove Dimension	ØA	ØB	ØC	F
	70.00	50.00	55.00	16.00

70.00

Part No	PUA 0700 0550 105			
Groove Dimension	ØA	ØB	ØC	F
	70.00	55.00	60.00	10.50

70.00

Part No	PUA 0700 0550 130			
Groove Dimension	ØA	ØB	ØC	F
	70.00	55.00	60.00	13.00

70.00

Part No	PUA 0700 0600 080			
Groove Dimension	ØA	ØB	ØC	F
	70.00	60.00	64.00	8.00

70.00

Part No	PUA 0700 0600 130			
Groove Dimension	ØA	ØB	ØC	F
	70.00	60.00	64.00	13.00

70.00

Part No	PUA 0700 0600 145			
Groove Dimension	ØA	ØB	ØC	F
	70.00	60.00	64.00	14.50

70.00

Part No	PUA 0700 0620 085			
Groove Dimension	ØA	ØB	ØC	F
	70.00	62.00	65.00	8.50

72.00

Part No	PUA 0720 0580 130			
Groove Dimension	ØA	ØB	ØC	F
	72.00	58.00	62.00	13.00

75.00

Part No	PUA 0750 0500 150			
Groove Dimension	ØA	ØB	ØC	F
	75.00	50.00	55.00	15.00

75.00

Part No	PUA 0750 0550 145			
Groove Dimension	ØA	ØB	ØC	F
	75.00	55.00	60.00	14.50

75.00

Part No	PUA 0750 0650 055			
Groove Dimension	ØA	ØB	ØC	F
	75.00	65.00	69.00	5.50

75.00

Part No	PUA 0750 0650 075			
Groove Dimension	ØA	ØB	ØC	F
	75.00	65.00	69.00	7.50

75.00

Part No	PUA 0750 0650 110			
Groove Dimension	ØA	ØB	ØC	F
	75.00	65.00	69.00	11.00

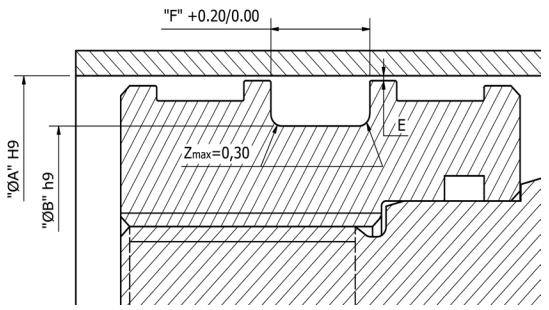

75.00

Part No	PUA 0750 0650 080			
Groove Dimension	ØA	ØB	ØC	F
	75.00	65.00	69.00	8.00

75.00

Part No	PUA 0750 0650 145			
Groove Dimension	ØA	ØB	ØC	F
	75.00	65.00	69.00	14.50

76.00

Part No	PUA 0760 0560 130			
Groove Dimension	ØA	ØB	ØC	F
	76.00	56.00	61.00	13.00

80.00

Part No	PUA 0800 0600 110			
Groove Dimension	ØA	ØB	ØC	F
	80.00	60.00	65.00	11.00

80.00

Part No	PUA 0800 0600 125			
Groove Dimension	ØA	ØB	ØC	F
	80.00	60.00	65.00	12.50

80.00

Part No	PUA 0800 0600 130			
Groove Dimension	ØA	ØB	ØC	F
	80.00	60.00	65.00	13.00

80.00

Part No	PUA 0800 0600 145			
Groove Dimension	ØA	ØB	ØC	F
	80.00	60.00	65.00	14.50

80.00

Part No	PUA 0800 0650 130			
Groove Dimension	ØA	ØB	ØC	F
	80.00	65.00	70.00	13.00

80.00

Part No	PUA 0800 0680 095			
Groove Dimension	ØA	ØB	ØC	F
	80.00	68.00	72.00	9.50

80.00

Part No	PUA 0800 0700 130			
Groove Dimension	ØA	ØB	ØC	F
	80.00	70.00	74.00	13.00

80.00

Part No	PUA 0800 0700 080			
Groove Dimension	ØA	ØB	ØC	F
	80.00	70.00	74.00	8.00

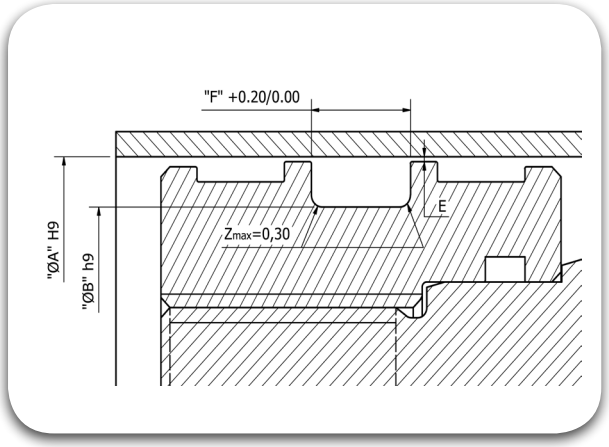

80.00

Part No	PUA 0800 0720 130			
Groove Dimension	ØA	ØB	ØC	F
	80.00	72.00	75.00	13.00

85.00

Part No	PUA 0850 0650 130			
Groove Dimension	ØA	ØB	ØC	F
	85.00	65.00	70.00	13.00

85.00

Part No	PUA 0850 0650 145			
Groove Dimension	ØA	ØB	ØC	F
	85.00	65.00	70.00	14.50

85.00

Part No	PUA 0850 0700 130			
Groove Dimension	ØA	ØB	ØC	F
	85.00	70.00	75.00	13.00

85.00

Part No	PUA 0850 0750 110			
Groove Dimension	ØA	ØB	ØC	F
	85.00	75.00	79.00	11.00

85.00

Part No	PUA 0850 0750 130			
Groove Dimension	ØA	ØB	ØC	F
	85.00	75.00	79.00	13.00

90.00

Part No	PUA 0900 0700 130			
Groove Dimension	ØA	ØB	ØC	F
	90.00	70.00	75.00	13.00

90.00

Part No	PUA 0900 0700 145			
Groove Dimension	ØA	ØB	ØC	F
	90.00	70.00	75.00	14.50

90.00

Part No	PUA 0900 0750 130			
Groove Dimension	ØA	ØB	ØC	F
	90.00	75.00	80.00	13.00

90.00

Part No	PUA 0900 0800 055			
Groove Dimension	ØA	ØB	ØC	F
	90.00	80.00	84.00	5.50

90.00

Part No	PUA 0900 0800 110			
Groove Dimension	ØA	ØB	ØC	F
	90.00	80.00	84.00	11.00

90.00

Part No	PUA 0900 0800 140			
Groove Dimension	ØA	ØB	ØC	F
	90.00	80.00	84.00	14.00

95.00

Part No	PUA 0950 0750 145			
Groove Dimension	ØA	ØB	ØC	F
	95.00	75.00	80.00	14.50

95.00

Part No	PUA 0950 0800 130			
Groove Dimension	ØA	ØB	ØC	F
	95.00	80.00	85.00	13.00

95.00

Part No	PUA 0950 0850 075			
Groove Dimension	ØA	ØB	ØC	F
	95.00	85.00	89.00	7.50

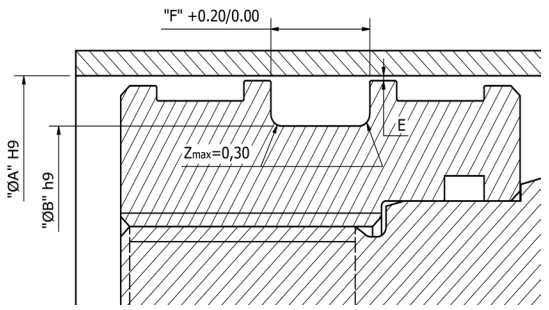

95.00

Part No	PUA 0950 0850 080			
Groove Dimension	ØA	ØB	ØC	F
	95.00	85.00	89.00	8.00

95.00

Part No	PUA 0950 0850 095			
Groove Dimension	ØA	ØB	ØC	F
	95.00	85.00	89.00	9.50

95.00

Part No	PUA 0950 0850 145			
Groove Dimension	ØA	ØB	ØC	F
	95.00	85.00	89.00	14.50

100.00

Part No	PUA 1000 0800 110			
Groove Dimension	ØA	ØB	ØC	F
	100.00	80.00	85.00	11.00

100.00

Part No	PUA 1000 0800 125			
Groove Dimension	ØA	ØB	ØC	F
	100.00	80.00	85.00	12.50

100.00

Part No	PUA 1000 0800 130			
Groove Dimension	ØA	ØB	ØC	F
	100.00	80.00	85.00	13.00

100.00

Part No	PUA 1000 0800 145			
Groove Dimension	ØA	ØB	ØC	F
	100.00	80.00	85.00	14.50

100.00

Part No	PUA 1000 0850 095			
Groove Dimension	ØA	ØB	ØC	F
	100.00	85.00	90.00	9.50

100.00

Part No	PUA 1000 0850 130			
Groove Dimension	ØA	ØB	ØC	F
	100.00	85.00	90.00	13.00

100.00

Part No	PUA 1000 0860 130			
Groove Dimension	ØA	ØB	ØC	F
	100.00	86.00	90.00	13.00

100.00

Part No	PUA 1000 0880 095			
Groove Dimension	ØA	ØB	ØC	F
	100.00	88.00	93.00	9.50

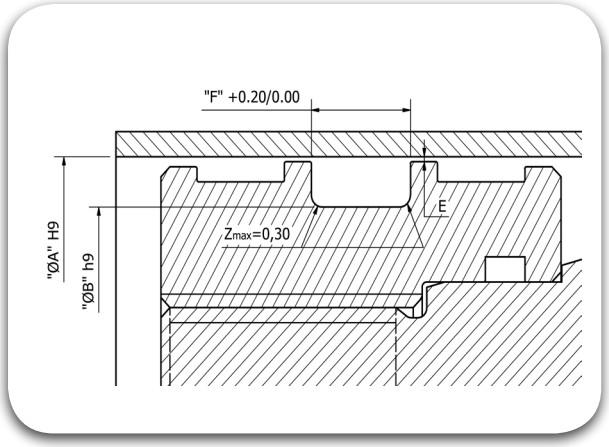

100.00

Part No	PUA 1000 0900 080			
Groove Dimension	ØA	ØB	ØC	F
	100.00	90.00	94.00	8.00

100.00

Part No	PUA 1000 0900 115			
Groove Dimension	ØA	ØB	ØC	F
	100.00	90.00	94.00	11.50

101.60

Part No	PUA 1016 0800 130			
Groove Dimension	ØA	ØB	ØC	F
	101.60	80.00	85.00	13.00

105.00

Part No	PUA 1050 0900 130			
Groove Dimension	ØA	ØB	ØC	F
	105.00	90.00	95.00	13.00

110.00

Part No	PUA 1100 0900 130			
Groove Dimension	ØA	ØB	ØC	F
	110.00	90.00	95.00	13.00

110.00

Part No	PUA 1100 0950 130			
Groove Dimension	ØA	ØB	ØC	F
	110.00	95.00	100.00	13.00

110.00

Part No	PUA 1100 1000 080			
Groove Dimension	ØA	ØB	ØC	F
	110.00	100.00	104.00	8.00

110.00

Part No	PUA 1100 1000 145			
Groove Dimension	ØA	ØB	ØC	F
	110.00	100.00	104.00	14.50

115.00

Part No	PUA 1150 1000 115			
Groove Dimension	ØA	ØB	ØC	F
	115.00	100.00	105.00	11.50

115.00

Part No	PUA 1150 1000 130			
Groove Dimension	ØA	ØB	ØC	F
	115.00	100.00	105.00	13.00

115.00

Part No	PUA 1150 1050 145			
Groove Dimension	ØA	ØB	ØC	F
	115.00	105.00	109.00	14.50

120.00

Part No	PUA 1200 0950 130			
Groove Dimension	ØA	ØB	ØC	F
	120.00	95.00	100.00	13.00

120.00

Part No	PUA 1200 1000 130			
Groove Dimension	ØA	ØB	ØC	F
	120.00	100.00	105.00	13.00

120.00					
Part No	PUA 1200 1000 145				
Groove Dimension	ØA	ØB	ØC	F	
	120.00	100.00	105.00	14.50	

120.00					
Part No	PUA 1200 1030 170				
Groove Dimension	ØA	ØB	ØC	F	
	120.00	103.00	108.00	17.00	

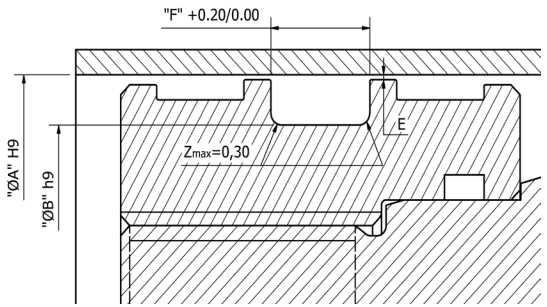

120.00					
Part No	PUA 1200 1050 130				
Groove Dimension	ØA	ØB	ØC	F	
	120.00	105.00	110.00	13.00	

125.00					
Part No	PUA 1250 1000 160				
Groove Dimension	ØA	ØB	ØC	F	
	125.00	100.00	105.00	16.00	

125.00					
Part No	PUA 1250 1050 130				
Groove Dimension	ØA	ØB	ØC	F	
	125.00	105.00	110.00	13.00	

125.00					
Part No	PUA 1250 1050 160				
Groove Dimension	ØA	ØB	ØC	F	
	125.00	105.00	110.00	16.00	

125.00					
Part No	PUA 1250 1100 110				
Groove Dimension	ØA	ØB	ØC	F	
	125.00	110.00	115.00	11.00	

125.00					
Part No	PUA 1250 1100 130				
Groove Dimension	ØA	ØB	ØC	F	
	125.00	110.00	115.00	13.00	

125.00					
Part No	PUA 1250 1150 080				
Groove Dimension	ØA	ØB	ØC	F	
	125.00	115.00	119.00	8.00	

125.00					
Part No	PUA 1250 1150 160				
Groove Dimension	ØA	ØB	ØC	F	
	125.00	115.00	119.00	16.00	

130.00					
Part No	PUA 1300 1100 160				
Groove Dimension	ØA	ØB	ØC	F	
	130.00	110.00	115.00	16.00	

140.00					
Part No	PUA 1400 1200 130				
Groove Dimension	ØA	ØB	ØC	F	
	140.00	120.00	125.00	13.00	

150.00					
Part No	PUA 1500 1300 160				
Groove Dimension	ØA	ØB	ØC	F	
	150.00	130.00	135.00	16.00	

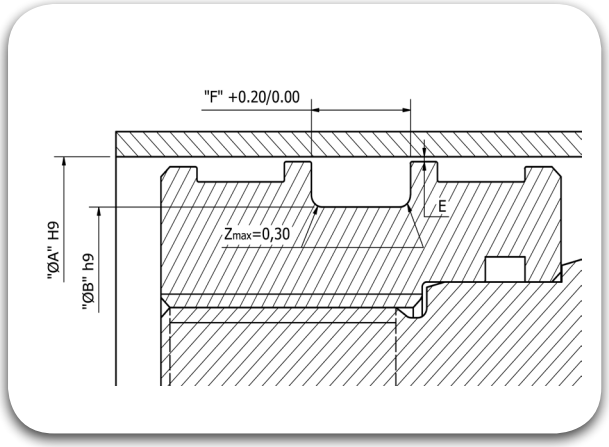

160.00

Part No	PUA 1600 1400 125			
Groove Dimension	ØA	ØB	ØC	F
	160.00	140.00	145.00	12.50

165.00

Part No	PUA 1650 1450 160			
Groove Dimension	ØA	ØB	ØC	F
	165.00	145.00	150.00	16.00

180.00

Part No	PUA 1800 1600 125			
Groove Dimension	ØA	ØB	ØC	F
	180.00	160.00	165.00	12.50

200.00

Part No	PUA 2000 1700 200			
Groove Dimension	ØA	ØB	ØC	F
	200.00	170.00	175.00	20.00

200.00

Part No	PUA 2000 1750 160			
Groove Dimension	ØA	ØB	ØC	F
	200.00	175.00	180.00	16.00

250.00

Part No	PUA 2500 2200 200			
Groove Dimension	ØA	ØB	ØC	F
	250.00	220.00	225.00	20.00

250.00

Part No	PUA 2500 2250 160			
Groove Dimension	ØA	ØB	ØC	F
	250.00	225.00	230.00	16.00

Piston Seals

PPS

TRIADA
TECHNOLOGIES

#SealingExcellence




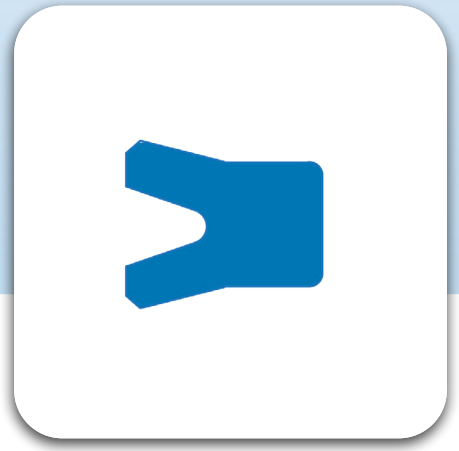

Description

The PPS is a single acting Symmetrical U-Cup, the TRIATHANE® (polyurethane) material used in this U-Cup provides high wear resistance, the taper behind the lip reduces friction at the dynamic surface.

Diameter Range	Ø10.00 – Ø2500.00
Standard material	TRIATHANE® T479 (Polyurethane)
Temperature(°C)	-30ºC to 130ºC
Speed	≤ 0.50 m/s
Fluids	Hydraulic fluids (Mineral Oil based), Water, Air etc, depending on Seal Compounds selected. depending on Seal Compounds selected.
Pressure	≤ 400 bar

Reciprocating | Oscillating | Rotary | Helix | Static | Single Acting | Double Acting

Material Details

Seal Material	Seal Material Code
TRIATHANE® Polyurethane	T479
TRIAFLEX® NBR 90 Shore A	T591

Nomenclature

Part No	PPS	0120	0050	060	T479
	Seal profile	Bore Dia x 10	Groove Dia x 10	Groove Width x 10	Seal Material Code

Groove Details

Operating Pressure Bar	Radial Clearance "E" max	
	ØA < 60mm	ØA > 60mm
50	0.40	0.50
100	0.30	0.40
200	0.20	0.30
300	0.15	0.20
400	0.10	0.15

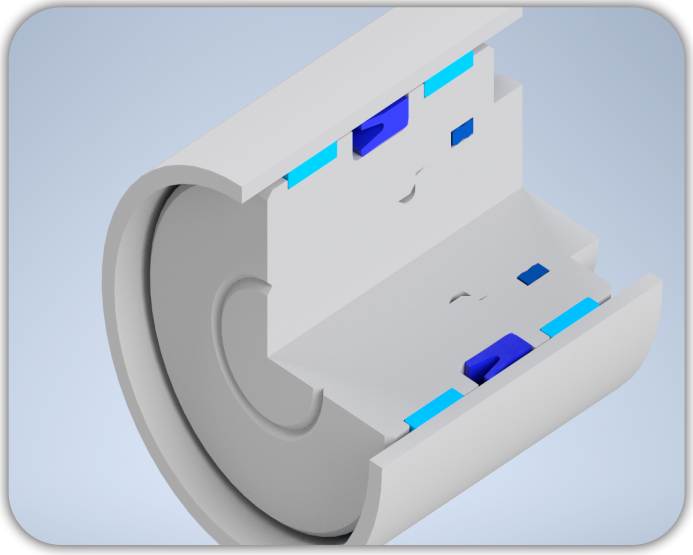

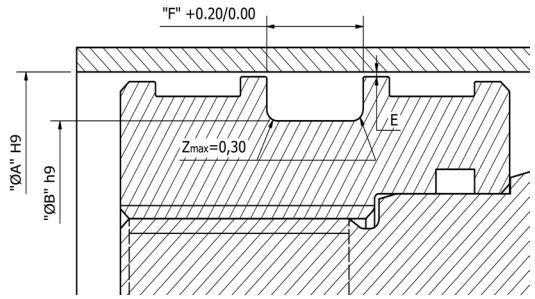

9.00

Part No	PPS 0090 0030 050				
Groove Dimension	ØA	x	ØB	x	F
	9.00		3.00		5.00

9.00

Part No	PPS 0090 0040 045				
Groove Dimension	ØA	x	ØB	x	F
	9.00		4.00		4.50

10.00

Part No	PPS 0100 0040 045				
Groove Dimension	ØA	x	ØB	x	F
	10.00		4.00		4.50

10.00

Part No	PPS 0100 0040 050				
Groove Dimension	ØA	x	ØB	x	F
	10.00		4.00		5.00

11.00

Part No	PPS 0110 0045 055				
Groove Dimension	ØA	x	ØB	x	F
	11.00		4.50		5.50

12.00

Part No	PPS 0120 0040 045				
Groove Dimension	ØA	x	ØB	x	F
	12.00		4.00		4.50

12.00

Part No	PPS 0120 0050 050				
Groove Dimension	ØA	x	ØB	x	F
	12.00		5.00		5.00

12.00

Part No	PPS 0120 0050 055				
Groove Dimension	ØA	x	ØB	x	F
	12.00		5.00		5.50

12.00

Part No	PPS 0120 0050 065				
Groove Dimension	ØA	x	ØB	x	F
	12.00		5.00		6.50

12.00

Part No	PPS 0120 0050 070				
Groove Dimension	ØA	x	ØB	x	F
	12.00		5.00		7.00

12.00

Part No	PPS 0120 0060 045				
Groove Dimension	ØA	x	ØB	x	F
	12.00		6.00		4.50

12.00

Part No	PPS 0120 0060 060				
Groove Dimension	ØA	x	ØB	x	F
	12.00		6.00		6.00

12.00

Part No	PPS 0120 0060 065				
Groove Dimension	ØA	x	ØB	x	F
	12.00		6.00		6.50

12.00

Part No	PPS 0120 0060 090
Groove Dimension	ØA 12.00 x ØB 6.00 x F 9.00

12.00

Part No	PPS 0120 0080 035
Groove Dimension	ØA 12.00 x ØB 8.00 x F 3.50

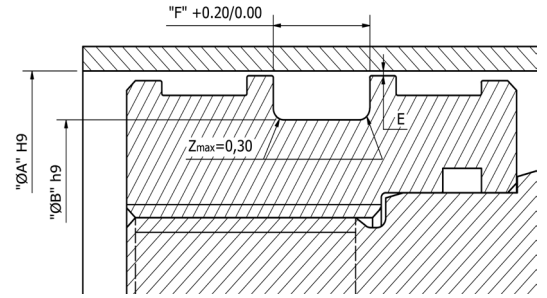

12.00

Part No	PPS 0120 0080 060
Groove Dimension	ØA 12.00 x ØB 8.00 x F 6.00

12.50

Part No	PPS 0125 0045 050
Groove Dimension	ØA 12.50 x ØB 4.50 x F 5.00

12.70

Part No	PPS 0127 0050 090
Groove Dimension	ØA 12.70 x ØB 5.00 x F 9.00

12.70

Part No	PPS 0127 0060 065
Groove Dimension	ØA 12.70 x ØB 6.00 x F 6.50

12.70

Part No	PPS 0127 0063 045
Groove Dimension	ØA 12.70 x ØB 6.30 x F 4.50

13.00

Part No	PPS 0130 0050 045
Groove Dimension	ØA 13.00 x ØB 5.00 x F 4.50

13.50

Part No	PPS 0135 0090 050
Groove Dimension	ØA 13.50 x ØB 9.00 x F 5.00

14.00

Part No	PPS 0140 0070 042
Groove Dimension	ØA 14.00 x ØB 7.00 x F 4.20

14.00

Part No	PPS 0140 0080 070
Groove Dimension	ØA 14.00 x ØB 8.00 x F 7.00

15.00

Part No	PPS 0150 0060 090
Groove Dimension	ØA 15.00 x ØB 6.00 x F 9.00

15.00

Part No	PPS 0150 0070 045
Groove Dimension	ØA 15.00 x ØB 7.00 x F 4.50

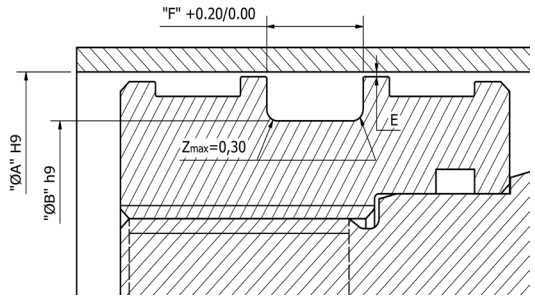

15.00

Part No	PPS 0150 0070 080					
Groove Dimension	ØA	x	ØB	x	F	
	15.00		7.00		8.00	

15.00

Part No	PPS 0150 0080 063					
Groove Dimension	ØA	x	ØB	x	F	
	15.00		8.00		6.30	

15.00

Part No	PPS 0150 0080 090					
Groove Dimension	ØA	x	ØB	x	F	
	15.00		8.00		9.00	

15.00

Part No	PPS 0150 0090 090					
Groove Dimension	ØA	x	ØB	x	F	
	15.00		9.00		9.00	

16.00

Part No	PPS 0160 0060 055					
Groove Dimension	ØA	x	ØB	x	F	
	16.00		6.00		5.50	

16.00

Part No	PPS 0160 0080 045					
Groove Dimension	ØA	x	ØB	x	F	
	16.00		8.00		4.50	

16.00

Part No	PPS 0160 0080 063					
Groove Dimension	ØA	x	ØB	x	F	
	16.00		8.00		6.30	

16.00

Part No	PPS 0160 0080 080					
Groove Dimension	ØA	x	ØB	x	F	
	16.00		8.00		8.00	

16.00

Part No	PPS 0160 0100 045					
Groove Dimension	ØA	x	ØB	x	F	
	16.00		10.00		4.50	

16.00

Part No	PPS 0160 0100 065					
Groove Dimension	ØA	x	ØB	x	F	
	16.00		10.00		6.50	

17.00

Part No	PPS 0170 0110 050					
Groove Dimension	ØA	x	ØB	x	F	
	17.00		11.00		5.00	

18.00

Part No	PPS 0180 0080 055					
Groove Dimension	ØA	x	ØB	x	F	
	18.00		8.00		5.50	

18.00

Part No	PPS 0180 0080 080					
Groove Dimension	ØA	x	ØB	x	F	
	18.00		8.00		8.00	

18.00

Part No	PPS 0180 0100 045				
Groove Dimension	ØA	x	ØB	x	F
	18.00		10.00		4.50

18.00

Part No	PPS 0180 0100 070				
Groove Dimension	ØA	x	ØB	x	F
	18.00		10.00		7.00

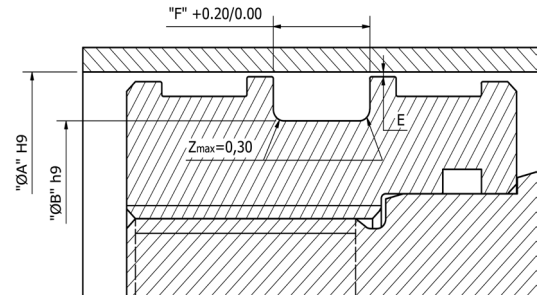

18.00

Part No	PPS 0180 0100 090				
Groove Dimension	ØA	x	ØB	x	F
	18.00		10.00		9.00

18.00

Part No	PPS 0180 0120 055				
Groove Dimension	ØA	x	ØB	x	F
	18.00		12.00		5.50

18.00

Part No	PPS 0180 0120 070				
Groove Dimension	ØA	x	ØB	x	F
	18.00		12.00		7.00

19.00

Part No	PPS 0190 0090 070				
Groove Dimension	ØA	x	ØB	x	F
	19.00		9.00		7.00

19.00

Part No	PPS 0190 0120 060				
Groove Dimension	ØA	x	ØB	x	F
	19.00		12.00		6.00

20.00

Part No	PPS 0200 0080 070				
Groove Dimension	ØA	x	ØB	x	F
	20.00		8.00		7.00

20.00

Part No	PPS 0200 0100 055				
Groove Dimension	ØA	x	ØB	x	F
	20.00		10.00		5.50

20.00

Part No	PPS 0200 0100 080				
Groove Dimension	ØA	x	ØB	x	F
	20.00		10.00		8.00

20.00

Part No	PPS 0200 0120 045				
Groove Dimension	ØA	x	ØB	x	F
	20.00		12.00		4.50

20.00

Part No	PPS 0200 0120 080				
Groove Dimension	ØA	x	ØB	x	F
	20.00		12.00		8.00

20.00

Part No	PPS 0200 0120 090				
Groove Dimension	ØA	x	ØB	x	F
	20.00		12.00		9.00

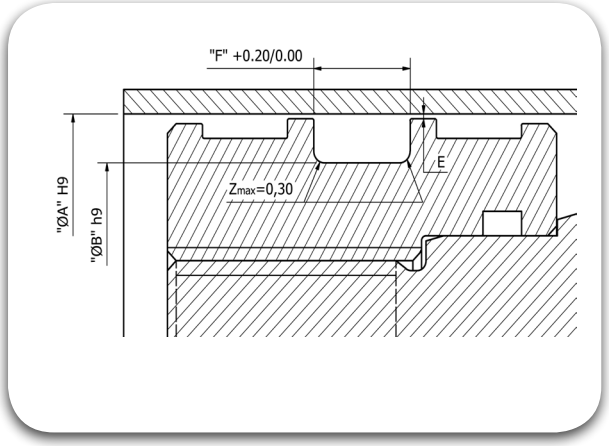

20.00

Part No	PPS 0200 0130 070				
Groove Dimension	ØA	x	ØB	x	F
	20.00		13.00		7.00

20.00

Part No	PPS 0200 0140 053				
Groove Dimension	ØA	x	ØB	x	F
	20.00		14.00		5.30

20.50

Part No	PPS 0205 0110 070				
Groove Dimension	ØA	x	ØB	x	F
	20.50		11.00		7.00

20.60

Part No	PPS 0206 0143 055				
Groove Dimension	ØA	x	ØB	x	F
	20.60		14.30		5.50

21.00

Part No	PPS 0210 0130 065				
Groove Dimension	ØA	x	ØB	x	F
	21.00		13.00		6.50

21.00

Part No	PPS 0210 0147 070				
Groove Dimension	ØA	x	ØB	x	F
	21.00		14.70		7.00

22.00

Part No	PPS 0220 0080 090				
Groove Dimension	ØA	x	ØB	x	F
	22.00		8.00		9.00

22.00

Part No	PPS 0220 0090 090				
Groove Dimension	ØA	x	ØB	x	F
	22.00		9.00		9.00

22.00

Part No	PPS 0220 0100 070				
Groove Dimension	ØA	x	ØB	x	F
	22.00		10.00		7.00

22.00

Part No	PPS 0220 0140 045				
Groove Dimension	ØA	x	ØB	x	F
	22.00		14.00		4.50

22.00

Part No	PPS 0220 0140 070				
Groove Dimension	ØA	x	ØB	x	F
	22.00		14.00		7.00

22.00

Part No	PPS 0220 0140 090				
Groove Dimension	ØA	x	ØB	x	F
	22.00		14.00		9.00

22.00

Part No	PPS 0220 0140 120				
Groove Dimension	ØA	x	ØB	x	F
	22.00		14.00		12.00

22.00

Part No	PPS 0220 0160 045
Groove Dimension	ØA 22.00 x ØB 16.00 x F 4.50

22.00

Part No	PPS 0220 0160 055
Groove Dimension	ØA 22.00 x ØB 16.00 x F 5.50

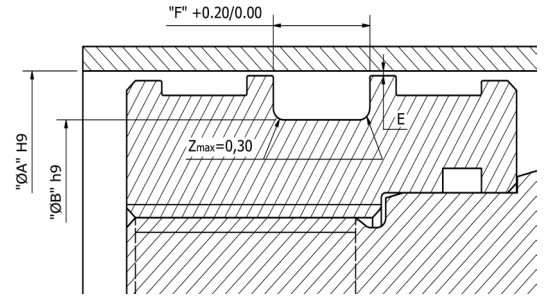

23.00

Part No	PPS 0230 0150 063
Groove Dimension	ØA 23.00 x ØB 15.00 x F 6.30

24.00

Part No	PPS 0240 0120 065
Groove Dimension	ØA 24.00 x ØB 12.00 x F 6.50

24.00

Part No	PPS 0240 0120 100
Groove Dimension	ØA 24.00 x ØB 12.00 x F 10.00

24.00

Part No	PPS 0240 0140 055
Groove Dimension	ØA 24.00 x ØB 14.00 x F 5.50

24.00

Part No	PPS 0240 0160 045
Groove Dimension	ØA 24.00 x ØB 16.00 x F 4.50

24.00

Part No	PPS 0240 0160 060
Groove Dimension	ØA 24.00 x ØB 16.00 x F 6.00

24.00

Part No	PPS 0240 0160 090
Groove Dimension	ØA 24.00 x ØB 16.00 x F 9.00

24.00

Part No	PPS 0240 0160 100
Groove Dimension	ØA 24.00 x ØB 16.00 x F 10.00

25.00

Part No	PPS 0250 0100 080
Groove Dimension	ØA 25.00 x ØB 10.00 x F 8.00

25.00

Part No	PPS 0250 0120 090
Groove Dimension	ØA 25.00 x ØB 12.00 x F 9.00

25.00

Part No	PPS 0250 0120 110
Groove Dimension	ØA 25.00 x ØB 12.00 x F 11.00

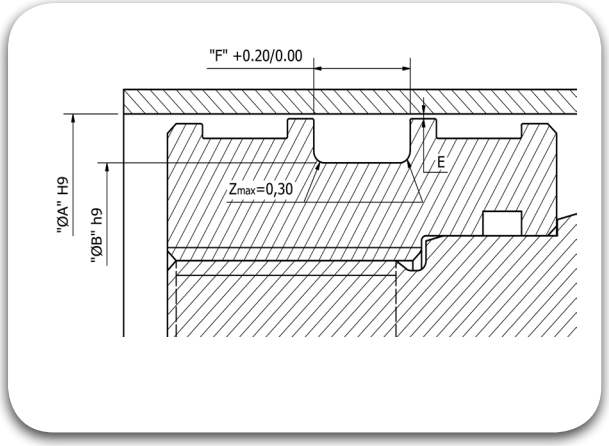

25.00

Part No	PPS 0250 0130 065					
Groove Dimension	ØA	x	ØB	x	F	
	25.00		13.00		6.50	

25.00

Part No	PPS 0250 0130 100					
Groove Dimension	ØA	x	ØB	x	F	
	25.00		13.00		10.00	

25.00

Part No	PPS 0250 0150 055					
Groove Dimension	ØA	x	ØB	x	F	
	25.00		15.00		5.50	

25.00

Part No	PPS 0250 0160 090					
Groove Dimension	ØA	x	ØB	x	F	
	25.00		16.00		9.00	

25.00

Part No	PPS 0250 0170 045					
Groove Dimension	ØA	x	ØB	x	F	
	25.00		17.00		4.50	

25.00

Part No	PPS 0250 0170 065					
Groove Dimension	ØA	x	ØB	x	F	
	25.00		17.00		6.50	

25.00

Part No	PPS 0250 0170 110					
Groove Dimension	ØA	x	ØB	x	F	
	25.00		17.00		11.00	

25.00

Part No	PPS 0250 0180 055					
Groove Dimension	ØA	x	ØB	x	F	
	25.00		18.00		5.50	

25.00

Part No	PPS 0250 0180 070					
Groove Dimension	ØA	x	ØB	x	F	
	25.00		18.00		7.00	

25.00

Part No	PPS 0250 0190 035					
Groove Dimension	ØA	x	ØB	x	F	
	25.00		19.00		3.50	

25.00

Part No	PPS 0250 0190 070					
Groove Dimension	ØA	x	ØB	x	F	
	25.00		19.00		7.00	

25.40

Part No	PPS 0254 0159 070					
Groove Dimension	ØA	x	ØB	x	F	
	25.40		15.90		7.00	

26.00

Part No	PPS 0260 0160 110					
Groove Dimension	ØA	x	ØB	x	F	
	26.00		16.00		11.00	

26.00		ØA	ØB	F
Part No	PPS 0260 0180 045			
Groove Dimension		26.00	18.00	4.50

26.00		ØA	ØB	F
Part No	PPS 0260 0180 075			
Groove Dimension		26.00	18.00	7.50

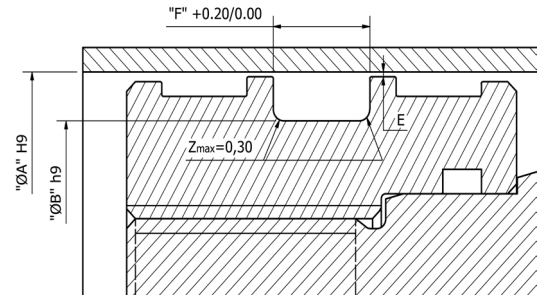

26.00		ØA	ØB	F
Part No	PPS 0260 0180 090			
Groove Dimension		26.00	18.00	9.00

26.00		ØA	ØB	F
Part No	PPS 0260 0200 038			
Groove Dimension		26.00	20.00	3.80

26.00		ØA	ØB	F
Part No	PPS 0260 0200 060			
Groove Dimension		26.00	20.00	6.00

27.00		ØA	ØB	F
Part No	PPS 0270 0150 070			
Groove Dimension		27.00	15.00	7.00

27.00		ØA	ØB	F
Part No	PPS 0270 0150 100			
Groove Dimension		27.00	15.00	10.00

27.00		ØA	ØB	F
Part No	PPS 0270 0170 075			
Groove Dimension		27.00	17.00	7.50

28.00		ØA	ØB	F
Part No	PPS 0280 0180 055			
Groove Dimension		28.00	18.00	5.50

28.00		ØA	ØB	F
Part No	PPS 0280 0180 063			
Groove Dimension		28.00	18.00	6.30

28.00		ØA	ØB	F
Part No	PPS 0280 0200 050			
Groove Dimension		28.00	20.00	5.00

28.00		ØA	ØB	F
Part No	PPS 0280 0200 055			
Groove Dimension		28.00	20.00	5.50

28.00		ØA	ØB	F
Part No	PPS 0280 0200 080			
Groove Dimension		28.00	20.00	8.00

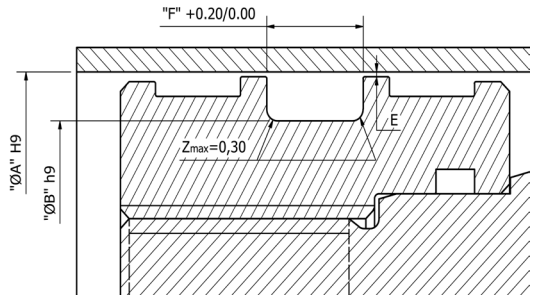

28.00

Part No	PPS 0280 0200 090
Groove Dimension	ØA 28.00 x ØB 20.00 x F 9.00

28.00

Part No	PPS 0280 0220 050
Groove Dimension	ØA 28.00 x ØB 22.00 x F 5.00

28.00

Part No	PPS 0280 0220 090
Groove Dimension	ØA 28.00 x ØB 22.00 x F 9.00

30.00

Part No	PPS 0300 0150 080
Groove Dimension	ØA 30.00 x ØB 15.00 x F 8.00

30.00

Part No	PPS 0300 0180 065
Groove Dimension	ØA 30.00 x ØB 18.00 x F 6.50

30.00

Part No	PPS 0300 0180 090
Groove Dimension	ØA 30.00 x ØB 18.00 x F 9.00

30.00

Part No	PPS 0300 0200 055
Groove Dimension	ØA 30.00 x ØB 20.00 x F 5.50

30.00

Part No	PPS 0300 0200 080
Groove Dimension	ØA 30.00 x ØB 20.00 x F 8.00

30.00

Part No	PPS 0300 0200 090
Groove Dimension	ØA 30.00 x ØB 20.00 x F 9.00

30.00

Part No	PPS 0300 0220 045
Groove Dimension	ØA 30.00 x ØB 22.00 x F 4.50

30.00

Part No	PPS 0300 0220 070
Groove Dimension	ØA 30.00 x ØB 22.00 x F 7.00

30.00

Part No	PPS 0300 0220 075
Groove Dimension	ØA 30.00 x ØB 22.00 x F 7.50

30.00

Part No	PPS 0300 0220 110
Groove Dimension	ØA 30.00 x ØB 22.00 x F 11.00

30.00

Part No	PPS 0300 0225 055					
Groove Dimension	ØA	x	ØB	x	F	
	30.00		22.50		5.50	

30.00

Part No	PPS 0300 0230 075					
Groove Dimension	ØA	x	ØB	x	F	
	30.00		23.00		7.50	

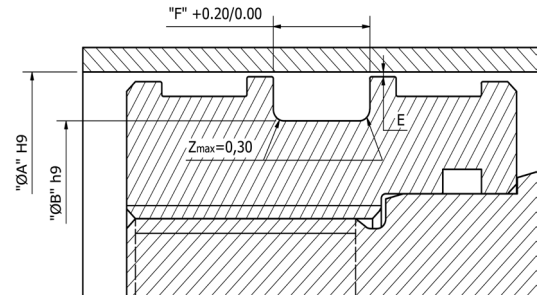

32.00

Part No	PPS 0320 0160 090					
Groove Dimension	ØA	x	ØB	x	F	
	32.00		16.00		9.00	

32.00

Part No	PPS 0320 0200 065					
Groove Dimension	ØA	x	ØB	x	F	
	32.00		20.00		6.50	

32.00

Part No	PPS 0320 0200 100					
Groove Dimension	ØA	x	ØB	x	F	
	32.00		20.00		10.00	

32.00

Part No	PPS 0320 0220 055					
Groove Dimension	ØA	x	ØB	x	F	
	32.00		22.00		5.50	

32.00

Part No	PPS 0320 0240 045					
Groove Dimension	ØA	x	ØB	x	F	
	32.00		24.00		4.50	

32.00

Part No	PPS 0320 0240 065					
Groove Dimension	ØA	x	ØB	x	F	
	32.00		24.00		6.50	

32.00

Part No	PPS 0320 0240 075					
Groove Dimension	ØA	x	ØB	x	F	
	32.00		24.00		7.50	

32.00

Part No	PPS 0320 0240 080					
Groove Dimension	ØA	x	ØB	x	F	
	32.00		24.00		8.00	

33.00

Part No	PPS 0330 0230 080					
Groove Dimension	ØA	x	ØB	x	F	
	33.00		23.00		8.00	

33.00

Part No	PPS 0330 0250 045					
Groove Dimension	ØA	x	ØB	x	F	
	33.00		25.00		4.50	

33.00

Part No	PPS 0330 0250 055					
Groove Dimension	ØA	x	ØB	x	F	
	33.00		25.00		5.50	

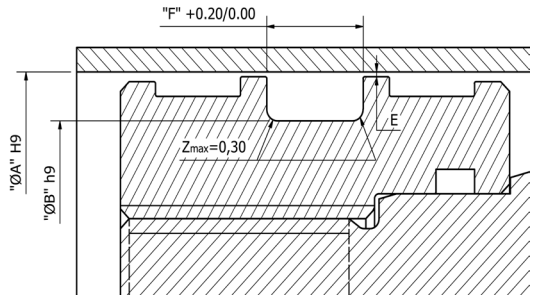

33.00

Part No	PPS 0330 0250 075				
Groove Dimension	ØA	x	ØB	x	F
	33.00		25.00		7.50

34.00

Part No	PPS 0340 0220 065				
Groove Dimension	ØA	x	ØB	x	F
	34.00		22.00		6.50

34.00

Part No	PPS 0340 0240 055				
Groove Dimension	ØA	x	ØB	x	F
	34.00		24.00		5.50

34.00

Part No	PPS 0340 0260 045				
Groove Dimension	ØA	x	ØB	x	F
	34.00		26.00		4.50

35.00

Part No	PPS 0350 0150 110				
Groove Dimension	ØA	x	ØB	x	F
	35.00		15.00		11.00

35.00

Part No	PPS 0350 0200 100				
Groove Dimension	ØA	x	ØB	x	F
	35.00		20.00		10.00

35.00

Part No	PPS 0350 0200 130				
Groove Dimension	ØA	x	ØB	x	F
	35.00		20.00		13.00

35.00

Part No	PPS 0350 0220 060				
Groove Dimension	ØA	x	ØB	x	F
	35.00		22.00		6.00

35.00

Part No	PPS 0350 0230 065				
Groove Dimension	ØA	x	ØB	x	F
	35.00		23.00		6.50

35.00

Part No	PPS 0350 0250 080				
Groove Dimension	ØA	x	ØB	x	F
	35.00		25.00		8.00

35.00

Part No	PPS 0350 0270 065				
Groove Dimension	ØA	x	ØB	x	F
	35.00		27.00		6.50

35.00

Part No	PPS 0350 0280 055				
Groove Dimension	ØA	x	ØB	x	F
	35.00		28.00		5.50

36.00

Part No	PPS 0360 0220 110				
Groove Dimension	ØA	x	ØB	x	F
	36.00		22.00		11.00

36.00		ØA	ØB	F
Part No	PPS 0360 0240 065			
Groove Dimension		36.00	24.00	6.50

36.00		ØA	ØB	F
Part No	PPS 0360 0240 100			
Groove Dimension		36.00	24.00	10.00

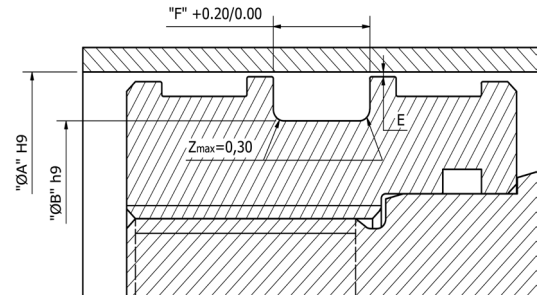

36.00		ØA	ØB	F
Part No	PPS 0360 0260 080			
Groove Dimension		36.00	26.00	8.00

36.00		ØA	ØB	F
Part No	PPS 0360 0280 075			
Groove Dimension		36.00	28.00	7.50

36.00		ØA	ØB	F
Part No	PPS 0360 0300 045			
Groove Dimension		36.00	30.00	4.50

37.00		ØA	ØB	F
Part No	PPS 0370 0250 065			
Groove Dimension		37.00	25.00	6.50

37.00		ØA	ØB	F
Part No	PPS 0370 0250 100			
Groove Dimension		37.00	25.00	10.00

37.00		ØA	ØB	F
Part No	PPS 0370 0290 045			
Groove Dimension		37.00	29.00	4.50

37.00		ØA	ØB	F
Part No	PPS 0370 0300 070			
Groove Dimension		37.00	30.00	7.00

38.00		ØA	ØB	F
Part No	PPS 0380 0180 110			
Groove Dimension		38.00	18.00	11.00

38.00		ØA	ØB	F
Part No	PPS 0380 0260 065			
Groove Dimension		38.00	26.00	6.50

38.00		ØA	ØB	F
Part No	PPS 0380 0300 045			
Groove Dimension		38.00	30.00	4.50

38.00		ØA	ØB	F
Part No	PPS 0380 0300 065			
Groove Dimension		38.00	30.00	6.50

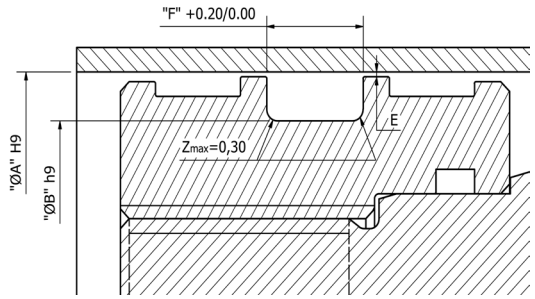

38.00

Part No	PPS 0380 0300 080					
Groove Dimension	ØA	x	ØB	x	F	
	38.00		30.00		8.00	

38.10

Part No	PPS 0381 0250 070					
Groove Dimension	ØA	x	ØB	x	F	
	38.10		25.00		7.00	

39.00

Part No	PPS 0390 0200 110					
Groove Dimension	ØA	x	ØB	x	F	
	39.00		20.00		11.00	

40.00

Part No	PPS 0400 0200 120					
Groove Dimension	ØA	x	ØB	x	F	
	40.00		20.00		12.00	

40.00

Part No	PPS 0400 0200 130					
Groove Dimension	ØA	x	ØB	x	F	
	40.00		20.00		13.00	

40.00

Part No	PPS 0400 0240 090					
Groove Dimension	ØA	x	ØB	x	F	
	40.00		24.00		9.00	

40.00

Part No	PPS 0400 0250 080					
Groove Dimension	ØA	x	ØB	x	F	
	40.00		25.00		8.00	

40.00

Part No	PPS 0400 0280 065					
Groove Dimension	ØA	x	ØB	x	F	
	40.00		28.00		6.50	

40.00

Part No	PPS 0400 0300 080					
Groove Dimension	ØA	x	ØB	x	F	
	40.00		30.00		8.00	

40.00

Part No	PPS 0400 0300 090					
Groove Dimension	ØA	x	ØB	x	F	
	40.00		30.00		9.00	

40.00

Part No	PPS 0400 0300 110					
Groove Dimension	ØA	x	ØB	x	F	
	40.00		30.00		11.00	

40.00

Part No	PPS 0400 0320 045					
Groove Dimension	ØA	x	ØB	x	F	
	40.00		32.00		4.50	

41.30

Part No	PPS 0413 0286 090					
Groove Dimension	ØA	x	ØB	x	F	
	41.30		28.60		9.00	

42.00

Part No	PPS 0420 0300 065
Groove Dimension	ØA 42.00 x ØB 30.00 x F 6.50

42.00

Part No	PPS 0420 0320 055
Groove Dimension	ØA 42.00 x ØB 32.00 x F 5.50

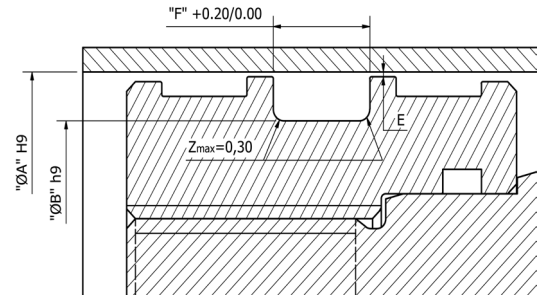

42.00

Part No	PPS 0420 0320 080
Groove Dimension	ØA 42.00 x ØB 32.00 x F 8.00

42.00

Part No	PPS 0420 0340 065
Groove Dimension	ØA 42.00 x ØB 34.00 x F 6.50

43.00

Part No	PPS 0430 0330 055
Groove Dimension	ØA 43.00 x ØB 33.00 x F 5.50

43.00

Part No	PPS 0430 0350 090
Groove Dimension	ØA 43.00 x ØB 35.00 x F 9.00

44.00

Part No	PPS 0440 0320 065
Groove Dimension	ØA 44.00 x ØB 32.00 x F 6.50

44.00

Part No	PPS 0440 0320 100
Groove Dimension	ØA 44.00 x ØB 32.00 x F 10.00

44.00

Part No	PPS 0440 0340 080
Groove Dimension	ØA 44.00 x ØB 34.00 x F 8.00

45.00

Part No	PPS 0450 0250 110
Groove Dimension	ØA 45.00 x ØB 25.00 x F 11.00

45.00

Part No	PPS 0450 0300 100
Groove Dimension	ØA 45.00 x ØB 30.00 x F 10.00

45.00

Part No	PPS 0450 0330 065
Groove Dimension	ØA 45.00 x ØB 33.00 x F 6.50

45.00

Part No	PPS 0450 0350 055
Groove Dimension	ØA 45.00 x ØB 35.00 x F 5.50

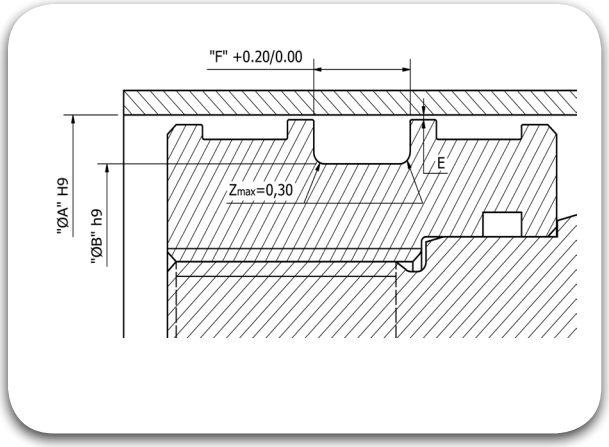

45.00

Part No	PPS 0450 0355 075				
Groove Dimension	ØA	x	ØB	x	F
	45.00		35.50		7.50

45.00

Part No	PPS 0450 0370 065				
Groove Dimension	ØA	x	ØB	x	F
	45.00		37.00		6.50

45.00

Part No	PPS 0450 0380 055				
Groove Dimension	ØA	x	ØB	x	F
	45.00		38.00		5.50

46.00

Part No	PPS 0460 0360 055				
Groove Dimension	ØA	x	ØB	x	F
	46.00		36.00		5.50

46.00

Part No	PPS 0460 0380 065				
Groove Dimension	ØA	x	ØB	x	F
	46.00		38.00		6.50

47.00

Part No	PPS 0470 0350 100				
Groove Dimension	ØA	x	ØB	x	F
	47.00		35.00		10.00

48.00

Part No	PPS 0480 0320 110				
Groove Dimension	ØA	x	ØB	x	F
	48.00		32.00		11.00

48.00

Part No	PPS 0480 0360 065				
Groove Dimension	ØA	x	ØB	x	F
	48.00		36.00		6.50

48.00

Part No	PPS 0480 0360 090				
Groove Dimension	ØA	x	ØB	x	F
	48.00		36.00		9.00

48.00

Part No	PPS 0480 0380 055				
Groove Dimension	ØA	x	ØB	x	F
	48.00		38.00		5.50

48.00

Part No	PPS 0480 0400 065				
Groove Dimension	ØA	x	ØB	x	F
	48.00		40.00		6.50

48.00

Part No	PPS 0480 0400 070				
Groove Dimension	ØA	x	ØB	x	F
	48.00		40.00		7.00

48.00

Part No	PPS 0480 0400 090				
Groove Dimension	ØA	x	ØB	x	F
	48.00		40.00		9.00

48.00

Part No	PPS 0480 0400 120
Groove Dimension	ØA 48.00 x ØB 40.00 x F 12.00

50.00

Part No	PPS 0500 0320 130
Groove Dimension	ØA 50.00 x ØB 32.00 x F 13.00

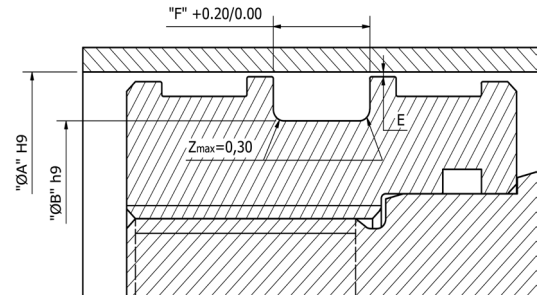

50.00

Part No	PPS 0500 0340 150
Groove Dimension	ØA 50.00 x ØB 34.00 x F 15.00

50.00

Part No	PPS 0500 0350 080
Groove Dimension	ØA 50.00 x ØB 35.00 x F 8.00

50.00

Part No	PPS 0500 0380 065
Groove Dimension	ØA 50.00 x ØB 38.00 x F 6.50

50.00

Part No	PPS 0500 0380 100
Groove Dimension	ØA 50.00 x ØB 38.00 x F 10.00

50.00

Part No	PPS 0500 0380 120
Groove Dimension	ØA 50.00 x ØB 38.00 x F 12.00

50.00

Part No	PPS 0500 0400 070
Groove Dimension	ØA 50.00 x ØB 40.00 x F 7.00

50.00

Part No	PPS 0500 0440 095
Groove Dimension	ØA 50.00 x ØB 44.00 x F 9.50

50.80

Part No	PPS 0508 0408 077
Groove Dimension	ØA 50.80 x ØB 40.80 x F 7.70

50.80

Part No	PPS 0508 0413 060
Groove Dimension	ØA 50.80 x ØB 41.30 x F 6.00

51.00

Part No	PPS 0510 0360 110
Groove Dimension	ØA 51.00 x ØB 36.00 x F 11.00

52.00

Part No	PPS 0520 0320 110
Groove Dimension	ØA 52.00 x ØB 32.00 x F 11.00

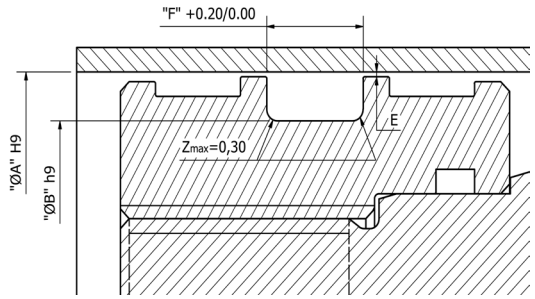

52.00

Part No	PPS 0520 0360 130				
Groove Dimension	ØA	x	ØB	x	F
	52.00		36.00		13.00

52.00

Part No	PPS 0520 0400 065				
Groove Dimension	ØA	x	ØB	x	F
	52.00		40.00		6.50

52.00

Part No	PPS 0520 0400 090				
Groove Dimension	ØA	x	ØB	x	F
	52.00		40.00		9.00

52.00

Part No	PPS 0520 0400 110				
Groove Dimension	ØA	x	ØB	x	F
	52.00		40.00		11.00

52.00

Part No	PPS 0520 0420 055				
Groove Dimension	ØA	x	ØB	x	F
	52.00		42.00		5.50

52.00

Part No	PPS 0520 0420 100				
Groove Dimension	ØA	x	ØB	x	F
	52.00		42.00		10.00

53.00

Part No	PPS 0530 0380 090				
Groove Dimension	ØA	x	ØB	x	F
	53.00		38.00		9.00

53.00

Part No	PPS 0530 0430 080				
Groove Dimension	ØA	x	ØB	x	F
	53.00		43.00		8.00

53.00

Part No	PPS 0530 0450 110				
Groove Dimension	ØA	x	ØB	x	F
	53.00		45.00		11.00

53.00

Part No	PPS 0530 0450 130				
Groove Dimension	ØA	x	ØB	x	F
	53.00		45.00		13.00

54.00

Part No	PPS 0540 0420 065				
Groove Dimension	ØA	x	ØB	x	F
	54.00		42.00		6.50

54.00

Part No	PPS 0540 0440 055				
Groove Dimension	ØA	x	ØB	x	F
	54.00		44.00		5.50

54.00

Part No	PPS 0540 0440 080				
Groove Dimension	ØA	x	ØB	x	F
	54.00		44.00		8.00

55.00

Part No	PPS 0550 0350 130					
Groove Dimension	ØA	x	ØB	x	F	
	55.00		35.00		13.00	

55.00

Part No	PPS 0550 0400 080					
Groove Dimension	ØA	x	ØB	x	F	
	55.00		40.00		8.00	

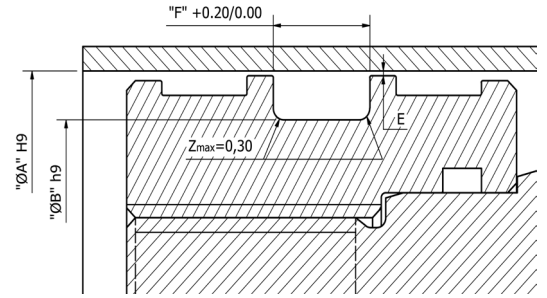

55.00

Part No	PPS 0550 0400 110					
Groove Dimension	ØA	x	ØB	x	F	
	55.00		40.00		11.00	

55.00

Part No	PPS 0550 0450 070					
Groove Dimension	ØA	x	ØB	x	F	
	55.00		45.00		7.00	

55.00

Part No	PPS 0550 0450 090					
Groove Dimension	ØA	x	ØB	x	F	
	55.00		45.00		9.00	

55.00

Part No	PPS 0550 0450 130					
Groove Dimension	ØA	x	ØB	x	F	
	55.00		45.00		13.00	

56.00

Part No	PPS 0560 0400 110					
Groove Dimension	ØA	x	ØB	x	F	
	56.00		40.00		11.00	

56.00

Part No	PPS 0560 0440 065					
Groove Dimension	ØA	x	ØB	x	F	
	56.00		44.00		6.50	

56.00

Part No	PPS 0560 0460 055					
Groove Dimension	ØA	x	ØB	x	F	
	56.00		46.00		5.50	

56.00

Part No	PPS 0560 0460 080					
Groove Dimension	ØA	x	ØB	x	F	
	56.00		46.00		8.00	

58.00

Part No	PPS 0580 0380 110					
Groove Dimension	ØA	x	ØB	x	F	
	58.00		38.00		11.00	

58.00

Part No	PPS 0580 0450 110					
Groove Dimension	ØA	x	ØB	x	F	
	58.00		45.00		11.00	

58.00

Part No	PPS 0580 0460 065					
Groove Dimension	ØA	x	ØB	x	F	
	58.00		46.00		6.50	

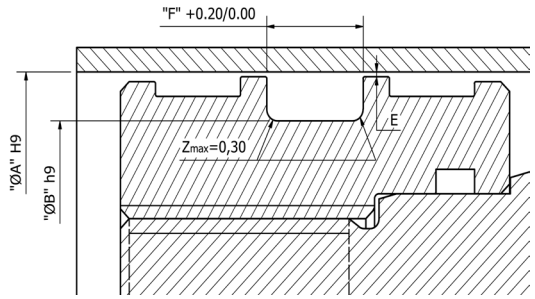

58.00

Part No	PPS 0580 0500 055				
Groove Dimension	ØA	x	ØB	x	F
	58.00		50.00		5.50

60.00

Part No	PPS 0600 0350 130				
Groove Dimension	ØA	x	ØB	x	F
	60.00		35.00		13.00

60.00

Part No	PPS 0600 0400 130				
Groove Dimension	ØA	x	ØB	x	F
	60.00		40.00		13.00

60.00

Part No	PPS 0600 0400 190				
Groove Dimension	ØA	x	ØB	x	F
	60.00		40.00		19.00

60.00

Part No	PPS 0600 0450 080				
Groove Dimension	ØA	x	ØB	x	F
	60.00		45.00		8.00

60.00

Part No	PPS 0600 0450 130				
Groove Dimension	ØA	x	ØB	x	F
	60.00		45.00		13.00

60.00

Part No	PPS 0600 0480 065				
Groove Dimension	ØA	x	ØB	x	F
	60.00		48.00		6.50

60.00

Part No	PPS 0600 0480 100				
Groove Dimension	ØA	x	ØB	x	F
	60.00		48.00		10.00

60.00

Part No	PPS 0600 0500 055				
Groove Dimension	ØA	x	ØB	x	F
	60.00		50.00		5.50

60.00

Part No	PPS 0600 0500 090				
Groove Dimension	ØA	x	ØB	x	F
	60.00		50.00		9.00

60.00

Part No	PPS 0600 0500 120				
Groove Dimension	ØA	x	ØB	x	F
	60.00		50.00		12.00

60.00

Part No	PPS 0600 0520 065				
Groove Dimension	ØA	x	ØB	x	F
	60.00		52.00		6.50

62.00

Part No	PPS 0620 0520 130				
Groove Dimension	ØA	x	ØB	x	F
	62.00		52.00		13.00

63.00

Part No	PPS 0630 0480 110					
Groove Dimension	ØA	x	ØB	x	F	
	63.00		48.00		11.00	

63.00

Part No	PPS 0630 0510 065					
Groove Dimension	ØA	x	ØB	x	F	
	63.00		51.00		6.50	

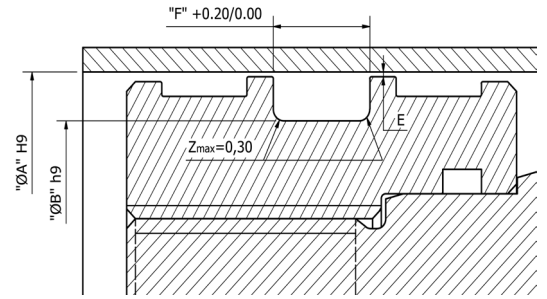

63.00

Part No	PPS 0630 0510 100					
Groove Dimension	ØA	x	ØB	x	F	
	63.00		51.00		10.00	

63.00

Part No	PPS 0630 0530 055					
Groove Dimension	ØA	x	ØB	x	F	
	63.00		53.00		5.50	

63.00

Part No	PPS 0630 0530 080					
Groove Dimension	ØA	x	ØB	x	F	
	63.00		53.00		8.00	

63.00

Part No	PPS 0630 0530 130					
Groove Dimension	ØA	x	ØB	x	F	
	63.00		53.00		13.00	

64.00

Part No	PPS 0640 0463 095					
Groove Dimension	ØA	x	ØB	x	F	
	64.00		46.30		9.50	

64.00

Part No	PPS 0640 0520 065					
Groove Dimension	ØA	x	ØB	x	F	
	64.00		52.00		6.50	

65.00

Part No	PPS 0650 0400 130					
Groove Dimension	ØA	x	ØB	x	F	
	65.00		40.00		13.00	

65.00

Part No	PPS 0650 0500 080					
Groove Dimension	ØA	x	ØB	x	F	
	65.00		50.00		8.00	

65.00

Part No	PPS 0650 0530 065					
Groove Dimension	ØA	x	ØB	x	F	
	65.00		53.00		6.50	

65.00

Part No	PPS 0650 0550 055					
Groove Dimension	ØA	x	ØB	x	F	
	65.00		55.00		5.50	

65.00

Part No	PPS 0650 0550 130					
Groove Dimension	ØA	x	ØB	x	F	
	65.00		55.00		13.00	

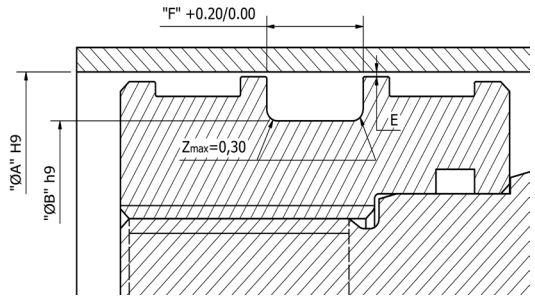

66.00

Part No	PPS 0660 0560 080					
Groove Dimension	ØA	x	ØB	x	F	
	66.00		56.00		8.00	

66.00

Part No	PPS 0660 0560 110					
Groove Dimension	ØA	x	ØB	x	F	
	66.00		56.00		11.00	

66.00

Part No	PPS 0660 0560 120					
Groove Dimension	ØA	x	ØB	x	F	
	66.00		56.00		12.00	

68.00

Part No	PPS 0680 0500 110					
Groove Dimension	ØA	x	ØB	x	F	
	68.00		50.00		11.00	

70.00

Part No	PPS 0700 0370 110					
Groove Dimension	ØA	x	ØB	x	F	
	70.00		37.00		11.00	

70.00

Part No	PPS 0700 0400 160					
Groove Dimension	ØA	x	ØB	x	F	
	70.00		40.00		16.00	

70.00

Part No	PPS 0700 0450 130					
Groove Dimension	ØA	x	ØB	x	F	
	70.00		45.00		13.00	

70.00

Part No	PPS 0700 0500 160					
Groove Dimension	ØA	x	ØB	x	F	
	70.00		50.00		16.00	

70.00

Part No	PPS 0700 0500 190					
Groove Dimension	ØA	x	ØB	x	F	
	70.00		50.00		19.00	

70.00

Part No	PPS 0700 0540 130					
Groove Dimension	ØA	x	ØB	x	F	
	70.00		54.00		13.00	

70.00

Part No	PPS 0700 0550 080					
Groove Dimension	ØA	x	ØB	x	F	
	70.00		55.00		8.00	

70.00

Part No	PPS 0700 0550 110					
Groove Dimension	ØA	x	ØB	x	F	
	70.00		55.00		11.00	

70.00

Part No	PPS 0700 0550 120					
Groove Dimension	ØA	x	ØB	x	F	
	70.00		55.00		12.00	

72.00

Part No	PPS 0720 0500 130					
Groove Dimension	ØA	x	ØB	x	F	
	72.00		50.00		13.00	

72.00

Part No	PPS 0720 0520 130					
Groove Dimension	ØA	x	ØB	x	F	
	72.00		52.00		13.00	

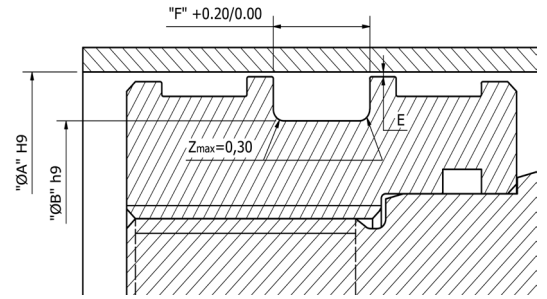

72.00

Part No	PPS 0720 0620 120					
Groove Dimension	ØA	x	ØB	x	F	
	72.00		62.00		12.00	

73.00

Part No	PPS 0730 0570 120					
Groove Dimension	ØA	x	ØB	x	F	
	73.00		57.00		12.00	

73.00

Part No	PPS 0730 0630 055					
Groove Dimension	ØA	x	ØB	x	F	
	73.00		63.00		5.50	

73.00

Part No	PPS 0730 0630 080					
Groove Dimension	ØA	x	ØB	x	F	
	73.00		63.00		8.00	

73.00

Part No	PPS 0730 0630 110					
Groove Dimension	ØA	x	ØB	x	F	
	73.00		63.00		11.00	

74.00

Part No	PPS 0740 0340 110					
Groove Dimension	ØA	x	ØB	x	F	
	74.00		34.00		11.00	

75.00

Part No	PPS 0750 0400 110					
Groove Dimension	ØA	x	ØB	x	F	
	75.00		40.00		11.00	

75.00

Part No	PPS 0750 0500 130					
Groove Dimension	ØA	x	ØB	x	F	
	75.00		50.00		13.00	

75.00

Part No	PPS 0750 0550 110					
Groove Dimension	ØA	x	ØB	x	F	
	75.00		55.00		11.00	

75.00

Part No	PPS 0750 0600 080					
Groove Dimension	ØA	x	ØB	x	F	
	75.00		60.00		8.00	

75.00

Part No	PPS 0750 0630 100					
Groove Dimension	ØA	x	ØB	x	F	
	75.00		63.00		10.00	

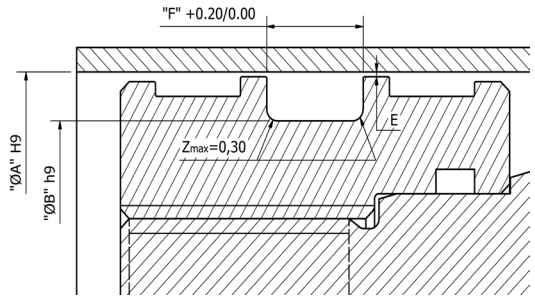

75.00

Part No	PPS 0750 0630 130				
Groove Dimension	ØA	x	ØB	x	F
	75.00		63.00		13.00

75.00

Part No	PPS 0750 0650 055				
Groove Dimension	ØA	x	ØB	x	F
	75.00		65.00		5.50

75.00

Part No	PPS 0750 0650 080				
Groove Dimension	ØA	x	ØB	x	F
	75.00		65.00		8.00

75.00

Part No	PPS 0750 0650 100				
Groove Dimension	ØA	x	ØB	x	F
	75.00		65.00		10.00

75.00

Part No	PPS 0750 0650 110				
Groove Dimension	ØA	x	ØB	x	F
	75.00		65.00		11.00

76.00

Part No	PPS 0760 0560 130				
Groove Dimension	ØA	x	ØB	x	F
	76.00		56.00		13.00

76.00

Part No	PPS 0760 0600 130				
Groove Dimension	ØA	x	ØB	x	F
	76.00		60.00		13.00

76.00

Part No	PPS 0760 0660 090				
Groove Dimension	ØA	x	ØB	x	F
	76.00		66.00		9.00

77.00

Part No	PPS 0770 0670 130				
Groove Dimension	ØA	x	ØB	x	F
	77.00		67.00		13.00

78.00

Part No	PPS 0780 0630 110				
Groove Dimension	ØA	x	ØB	x	F
	78.00		63.00		11.00

80.00

Part No	PPS 0800 0500 110				
Groove Dimension	ØA	x	ØB	x	F
	80.00		50.00		11.00

80.00

Part No	PPS 0800 0550 110				
Groove Dimension	ØA	x	ØB	x	F
	80.00		55.00		11.00

80.00

Part No	PPS 0800 0550 130				
Groove Dimension	ØA	x	ØB	x	F
	80.00		55.00		13.00

80.00

Part No	PPS 0800 0550 150					
Groove Dimension	ØA	x	ØB	x	F	
	80.00		55.00		15.00	

80.00

Part No	PPS 0800 0600 160					
Groove Dimension	ØA	x	ØB	x	F	
	80.00		60.00		16.00	

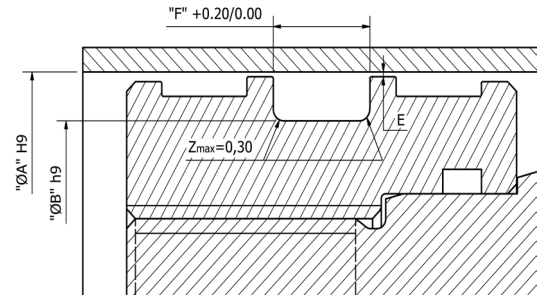

80.00

Part No	PPS 0800 0600 190					
Groove Dimension	ØA	x	ØB	x	F	
	80.00		60.00		19.00	

80.00

Part No	PPS 0800 0640 130					
Groove Dimension	ØA	x	ØB	x	F	
	80.00		64.00		13.00	

80.00

Part No	PPS 0800 0650 080					
Groove Dimension	ØA	x	ØB	x	F	
	80.00		65.00		8.00	

80.00

Part No	PPS 0800 0650 120					
Groove Dimension	ØA	x	ØB	x	F	
	80.00		65.00		12.00	

80.00

Part No	PPS 0800 0660 110					
Groove Dimension	ØA	x	ØB	x	F	
	80.00		66.00		11.00	

80.00

Part No	PPS 0800 0660 140					
Groove Dimension	ØA	x	ØB	x	F	
	80.00		66.00		14.00	

80.00

Part No	PPS 0800 0700 080					
Groove Dimension	ØA	x	ØB	x	F	
	80.00		70.00		8.00	

82.00

Part No	PPS 0820 0700 100					
Groove Dimension	ØA	x	ØB	x	F	
	82.00		70.00		10.00	

83.00

Part No	PPS 0830 0630 130					
Groove Dimension	ØA	x	ØB	x	F	
	83.00		63.00		13.00	

83.00

Part No	PPS 0830 0630 160					
Groove Dimension	ØA	x	ØB	x	F	
	83.00		63.00		16.00	

85.00

Part No	PPS 0850 0550 160					
Groove Dimension	ØA	x	ØB	x	F	
	85.00		55.00		16.00	

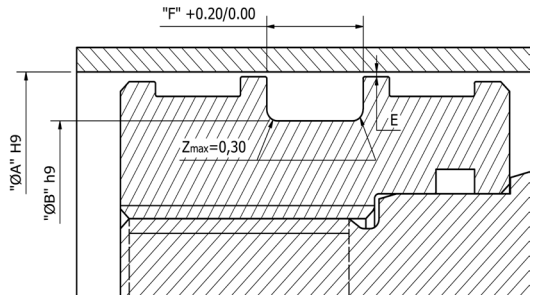

85.00

Part No	PPS 0850 0600 110					
Groove Dimension	ØA	x	ØB	x	F	
	85.00		60.00		11.00	

85.00

Part No	PPS 0850 0600 135					
Groove Dimension	ØA	x	ØB	x	F	
	85.00		60.00		13.50	

85.00

Part No	PPS 0850 0650 110					
Groove Dimension	ØA	x	ØB	x	F	
	85.00		65.00		11.00	

85.00

Part No	PPS 0850 0650 160					
Groove Dimension	ØA	x	ØB	x	F	
	85.00		65.00		16.00	

85.00

Part No	PPS 0850 0700 110					
Groove Dimension	ØA	x	ØB	x	F	
	85.00		70.00		11.00	

85.00

Part No	PPS 0850 0700 130					
Groove Dimension	ØA	x	ØB	x	F	
	85.00		70.00		13.00	

85.00

Part No	PPS 0850 0730 100					
Groove Dimension	ØA	x	ØB	x	F	
	85.00		73.00		10.00	

85.00

Part No	PPS 0850 0750 055					
Groove Dimension	ØA	x	ØB	x	F	
	85.00		75.00		5.50	

85.00

Part No	PPS 0850 0750 080					
Groove Dimension	ØA	x	ØB	x	F	
	85.00		75.00		8.00	

85.00

Part No	PPS 0850 0750 110					
Groove Dimension	ØA	x	ØB	x	F	
	85.00		75.00		11.00	

90.00

Part No	PPS 0900 0600 160					
Groove Dimension	ØA	x	ØB	x	F	
	90.00		60.00		16.00	

90.00

Part No	PPS 0900 0700 110					
Groove Dimension	ØA	x	ØB	x	F	
	90.00		70.00		11.00	

90.00

Part No	PPS 0900 0700 160					
Groove Dimension	ØA	x	ØB	x	F	
	90.00		70.00		16.00	

90.00

Part No	PPS 0900 0700 190					
Groove Dimension	ØA	x	ØB	x	F	
	90.00		70.00		19.00	

90.00

Part No	PPS 0900 0740 130					
Groove Dimension	ØA	x	ØB	x	F	
	90.00		74.00		13.00	

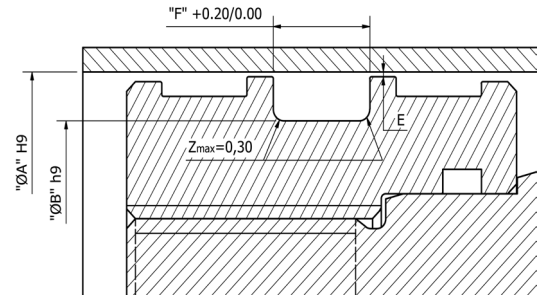

90.00

Part No	PPS 0900 0800 080					
Groove Dimension	ØA	x	ØB	x	F	
	90.00		80.00		8.00	

91.00

Part No	PPS 0910 0750 130					
Groove Dimension	ØA	x	ØB	x	F	
	91.00		75.00		13.00	

92.00

Part No	PPS 0920 0760 130					
Groove Dimension	ØA	x	ØB	x	F	
	92.00		76.00		13.00	

92.00

Part No	PPS 0920 0820 110					
Groove Dimension	ØA	x	ØB	x	F	
	92.00		82.00		11.00	

93.00

Part No	PPS 0930 0780 115					
Groove Dimension	ØA	x	ØB	x	F	
	93.00		78.00		11.50	

95.00

Part No	PPS 0950 0700 110					
Groove Dimension	ØA	x	ØB	x	F	
	95.00		70.00		11.00	

95.00

Part No	PPS 0950 0700 130					
Groove Dimension	ØA	x	ØB	x	F	
	95.00		70.00		13.00	

95.00

Part No	PPS 0950 0750 110					
Groove Dimension	ØA	x	ØB	x	F	
	95.00		75.00		11.00	

95.00

Part No	PPS 0950 0750 145					
Groove Dimension	ØA	x	ØB	x	F	
	95.00		75.00		14.50	

95.00

Part No	PPS 0950 0800 080					
Groove Dimension	ØA	x	ØB	x	F	
	95.00		80.00		8.00	

95.00

Part No	PPS 0950 0800 110					
Groove Dimension	ØA	x	ØB	x	F	
	95.00		80.00		11.00	

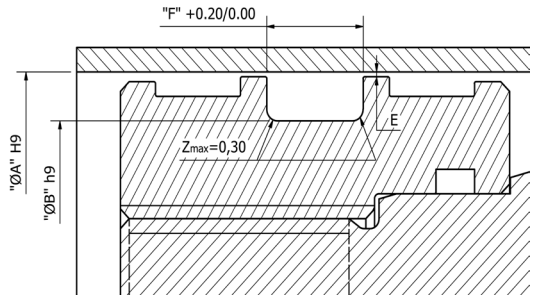

95.00

Part No	PPS 0950 0830 100					
Groove Dimension	ØA	x	ØB	x	F	
	95.00		83.00		10.00	

95.00

Part No	PPS 0950 0850 055					
Groove Dimension	ØA	x	ØB	x	F	
	95.00		85.00		5.50	

100.00

Part No	PPS 1000 0700 160					
Groove Dimension	ØA	x	ØB	x	F	
	100.00		70.00		16.00	

100.00

Part No	PPS 1000 0750 130					
Groove Dimension	ØA	x	ØB	x	F	
	100.00		75.00		13.00	

100.00

Part No	PPS 1000 0750 200					
Groove Dimension	ØA	x	ØB	x	F	
	100.00		75.00		20.00	

100.00

Part No	PPS 1000 0800 110					
Groove Dimension	ØA	x	ØB	x	F	
	100.00		80.00		11.00	

100.00

Part No	PPS 1000 0800 160					
Groove Dimension	ØA	x	ØB	x	F	
	100.00		80.00		16.00	

100.00

Part No	PPS 1000 0850 080					
Groove Dimension	ØA	x	ØB	x	F	
	100.00		85.00		8.00	

100.00

Part No	PPS 1000 0850 120					
Groove Dimension	ØA	x	ØB	x	F	
	100.00		85.00		12.00	

100.00

Part No	PPS 1000 0880 100					
Groove Dimension	ØA	x	ØB	x	F	
	100.00		88.00		10.00	

100.00

Part No	PPS 1000 0900 055					
Groove Dimension	ØA	x	ØB	x	F	
	100.00		90.00		5.50	

100.00

Part No	PPS 1000 0900 080					
Groove Dimension	ØA	x	ØB	x	F	
	100.00		90.00		8.00	

100.00

Part No	PPS 1000 0900 110					
Groove Dimension	ØA	x	ØB	x	F	
	100.00		90.00		11.00	

101.00

Part No	PPS 1010 0850 130					
Groove Dimension	ØA	x	ØB	x	F	
	101.00		85.00		13.00	

101.00

Part No	PPS 1010 0860 130					
Groove Dimension	ØA	x	ØB	x	F	
	101.00		86.00		13.00	

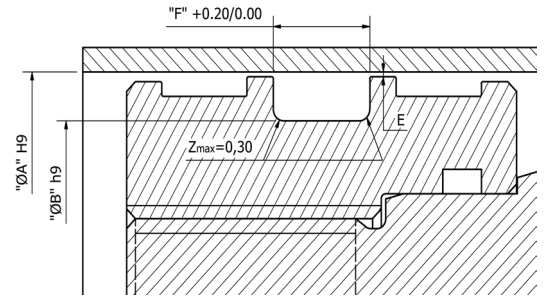

105.00

Part No	PPS 1050 0800 130					
Groove Dimension	ØA	x	ØB	x	F	
	105.00		80.00		13.00	

105.00

Part No	PPS 1050 0800 230					
Groove Dimension	ØA	x	ØB	x	F	
	105.00		80.00		23.00	

105.00

Part No	PPS 1050 0850 190					
Groove Dimension	ØA	x	ØB	x	F	
	105.00		85.00		19.00	

105.00

Part No	PPS 1050 0900 080					
Groove Dimension	ØA	x	ØB	x	F	
	105.00		90.00		8.00	

105.00

Part No	PPS 1050 0950 055					
Groove Dimension	ØA	x	ØB	x	F	
	105.00		95.00		5.50	

107.00

Part No	PPS 1070 0950 100					
Groove Dimension	ØA	x	ØB	x	F	
	107.00		95.00		10.00	

109.00

Part No	PPS 1090 0990 150					
Groove Dimension	ØA	x	ØB	x	F	
	109.00		99.00		15.00	

110.00

Part No	PPS 1100 0800 160					
Groove Dimension	ØA	x	ØB	x	F	
	110.00		80.00		16.00	

110.00

Part No	PPS 1100 0850 130					
Groove Dimension	ØA	x	ØB	x	F	
	110.00		85.00		13.00	

110.00

Part No	PPS 1100 0900 110					
Groove Dimension	ØA	x	ØB	x	F	
	110.00		90.00		11.00	

110.00

Part No	PPS 1100 0900 160					
Groove Dimension	ØA	x	ØB	x	F	
	110.00		90.00		16.00	

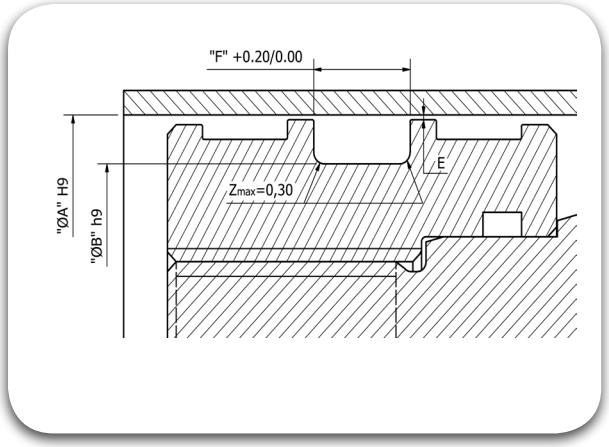

110.00

Part No	PPS 1100 0900 190					
Groove Dimension	ØA	x	ØB	x	F	
	110.00		90.00		19.00	

110.00

Part No	PPS 1100 0940 130					
Groove Dimension	ØA	x	ØB	x	F	
	110.00		94.00		13.00	

110.00

Part No	PPS 1100 0950 160					
Groove Dimension	ØA	x	ØB	x	F	
	110.00		95.00		16.00	

110.00

Part No	PPS 1100 1000 055					
Groove Dimension	ØA	x	ØB	x	F	
	110.00		100.00		5.50	

112.00

Part No	PPS 1120 0950 120					
Groove Dimension	ØA	x	ØB	x	F	
	112.00		95.00		12.00	

112.00

Part No	PPS 1120 1000 100					
Groove Dimension	ØA	x	ØB	x	F	
	112.00		100.00		10.00	

112.00

Part No	PPS 1120 1020 120					
Groove Dimension	ØA	x	ØB	x	F	
	112.00		102.00		12.00	

114.30

Part No	PPS 1143 0889 150					
Groove Dimension	ØA	x	ØB	x	F	
	114.30		88.90		15.00	

115.00

Part No	PPS 1150 0850 160					
Groove Dimension	ØA	x	ØB	x	F	
	115.00		85.00		16.00	

115.00

Part No	PPS 1150 0900 130					
Groove Dimension	ØA	x	ØB	x	F	
	115.00		90.00		13.00	

115.00

Part No	PPS 1150 0900 160					
Groove Dimension	ØA	x	ØB	x	F	
	115.00		90.00		16.00	

115.00

Part No	PPS 1150 0900 230					
Groove Dimension	ØA	x	ØB	x	F	
	115.00		90.00		23.00	

115.00

Part No	PPS 1150 0950 160					
Groove Dimension	ØA	x	ØB	x	F	
	115.00		95.00		16.00	

115.00

Part No	PPS 1150 0950 190		
Groove Dimension	ØA	ØB	F
	115.00	95.00	19.00

115.00

Part No	PPS 1150 0990 130		
Groove Dimension	ØA	ØB	F
	115.00	99.00	13.00

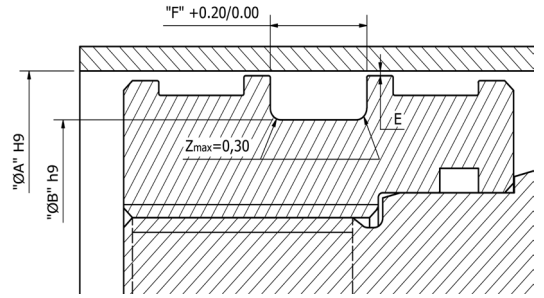

115.00

Part No	PPS 1150 1000 160		
Groove Dimension	ØA	ØB	F
	115.00	100.00	16.00

115.00

Part No	PPS 1150 1030 100		
Groove Dimension	ØA	ØB	F
	115.00	103.00	10.00

117.00

Part No	PPS 1170 1050 100		
Groove Dimension	ØA	ØB	F
	117.00	105.00	10.00

120.00

Part No	PPS 1200 0900 160		
Groove Dimension	ØA	ØB	F
	120.00	90.00	16.00

120.00

Part No	PPS 1200 0950 200		
Groove Dimension	ØA	ØB	F
	120.00	95.00	20.00

120.00

Part No	PPS 1200 1000 110		
Groove Dimension	ØA	ØB	F
	120.00	100.00	11.00

120.00

Part No	PPS 1200 1000 160		
Groove Dimension	ØA	ØB	F
	120.00	100.00	16.00

120.00

Part No	PPS 1200 1000 190		
Groove Dimension	ØA	ØB	F
	120.00	100.00	19.00

120.00

Part No	PPS 1200 1050 090		
Groove Dimension	ØA	ØB	F
	120.00	105.00	9.00

120.00

Part No	PPS 1200 1050 120		
Groove Dimension	ØA	ØB	F
	120.00	105.00	12.00

121.00

Part No	PPS 1210 1110 065		
Groove Dimension	ØA	ØB	F
	121.00	111.00	6.50

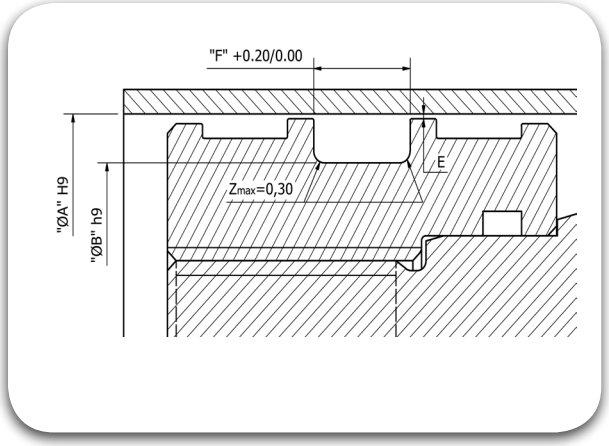

125.00

Part No	PPS 1250 1000 200					
Groove Dimension	ØA	x	ØB	x	F	
	125.00		100.00		20.00	

125.00

Part No	PPS 1250 1050 110					
Groove Dimension	ØA	x	ØB	x	F	
	125.00		105.00		11.00	

125.00

Part No	PPS 1250 1130 105					
Groove Dimension	ØA	x	ØB	x	F	
	125.00		113.00		10.50	

127.00

Part No	PPS 1270 1120 120					
Groove Dimension	ØA	x	ØB	x	F	
	127.00		112.00		12.00	

130.00

Part No	PPS 1300 1000 130					
Groove Dimension	ØA	x	ØB	x	F	
	130.00		100.00		13.00	

130.00

Part No	PPS 1300 1000 160					
Groove Dimension	ØA	x	ØB	x	F	
	130.00		100.00		16.00	

130.00

Part No	PPS 1300 1050 130					
Groove Dimension	ØA	x	ØB	x	F	
	130.00		105.00		13.00	

130.00

Part No	PPS 1300 1100 110					
Groove Dimension	ØA	x	ØB	x	F	
	130.00		110.00		11.00	

130.00

Part No	PPS 1300 1100 130					
Groove Dimension	ØA	x	ØB	x	F	
	130.00		110.00		13.00	

130.00

Part No	PPS 1300 1100 190					
Groove Dimension	ØA	x	ØB	x	F	
	130.00		110.00		19.00	

130.00

Part No	PPS 1300 1150 080					
Groove Dimension	ØA	x	ØB	x	F	
	130.00		115.00		8.00	

130.00

Part No	PPS 1300 1150 110					
Groove Dimension	ØA	x	ØB	x	F	
	130.00		115.00		11.00	

130.00

Part No	PPS 1300 1150 120					
Groove Dimension	ØA	x	ØB	x	F	
	130.00		115.00		12.00	

130.00		ØA	ØB	F
Part No	PPS 1300 1150 160			
Groove Dimension		130.00	115.00	16.00

130.00		ØA	ØB	F
Part No	PPS 1300 1180 110			
Groove Dimension		130.00	118.00	11.00

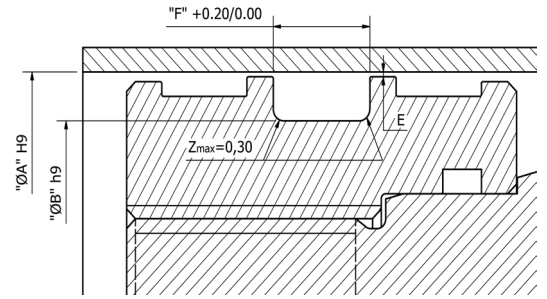

130.00		ØA	ØB	F
Part No	PPS 1300 1200 150			
Groove Dimension		130.00	120.00	15.00

135.00		ØA	ØB	F
Part No	PPS 1350 1100 160			
Groove Dimension		135.00	110.00	16.00

135.00		ØA	ØB	F
Part No	PPS 1350 1200 160			
Groove Dimension		135.00	120.00	16.00

135.00		ØA	ØB	F
Part No	PPS 1350 1230 100			
Groove Dimension		135.00	123.00	10.00

137.00		ØA	ØB	F
Part No	PPS 1370 1250 100			
Groove Dimension		137.00	125.00	10.00

140.00		ØA	ØB	F
Part No	PPS 1400 1100 160			
Groove Dimension		140.00	110.00	16.00

140.00		ØA	ØB	F
Part No	PPS 1400 1150 160			
Groove Dimension		140.00	115.00	16.00

140.00		ØA	ØB	F
Part No	PPS 1400 1150 230			
Groove Dimension		140.00	115.00	23.00

140.00		ØA	ØB	F
Part No	PPS 1400 1200 110			
Groove Dimension		140.00	120.00	11.00

140.00		ØA	ØB	F
Part No	PPS 1400 1200 130			
Groove Dimension		140.00	120.00	13.00

145.00		ØA	ØB	F
Part No	PPS 1450 1200 200			
Groove Dimension		145.00	120.00	20.00

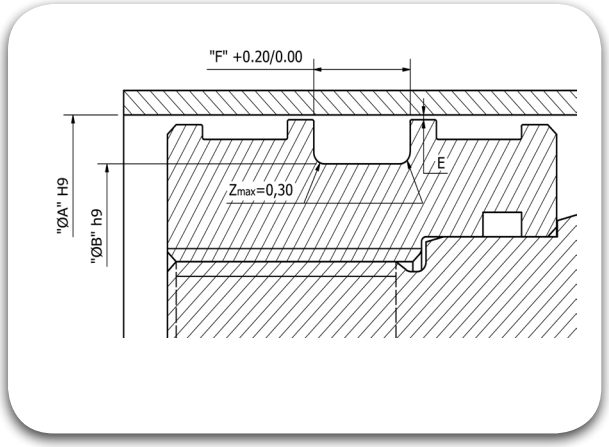

145.00

Part No	PPS 1450 1250 130					
Groove Dimension	ØA	x	ØB	x	F	
	145.00		125.00		13.00	

145.00

Part No	PPS 1450 1250 190					
Groove Dimension	ØA	x	ØB	x	F	
	145.00		125.00		19.00	

145.00

Part No	PPS 1450 1300 120					
Groove Dimension	ØA	x	ØB	x	F	
	145.00		130.00		12.00	

145.00

Part No	PPS 1450 1300 160					
Groove Dimension	ØA	x	ØB	x	F	
	145.00		130.00		16.00	

145.00

Part No	PPS 1450 1330 100					
Groove Dimension	ØA	x	ØB	x	F	
	145.00		133.00		10.00	

150.00

Part No	PPS 1500 1350 160					
Groove Dimension	ØA	x	ØB	x	F	
	150.00		135.00		16.00	

150.00

Part No	PPS 1500 1380 100					
Groove Dimension	ØA	x	ØB	x	F	
	150.00		138.00		10.00	

155.00

Part No	PPS 1550 1250 160					
Groove Dimension	ØA	x	ØB	x	F	
	155.00		125.00		16.00	

155.00

Part No	PPS 1550 1300 200					
Groove Dimension	ØA	x	ØB	x	F	
	155.00		130.00		20.00	

155.00

Part No	PPS 1550 1350 160					
Groove Dimension	ØA	x	ØB	x	F	
	155.00		135.00		16.00	

160.00

Part No	PPS 1600 1300 230					
Groove Dimension	ØA	x	ØB	x	F	
	160.00		130.00		23.00	

160.00

Part No	PPS 1600 1350 130					
Groove Dimension	ØA	x	ØB	x	F	
	160.00		135.00		13.00	

160.00

Part No	PPS 1600 1350 160					
Groove Dimension	ØA	x	ØB	x	F	
	160.00		135.00		16.00	

160.00

Part No	PPS 1600 1400 110		
Groove Dimension	ØA	ØB	F
	160.00	140.00	11.00

160.00

Part No	PPS 1600 1400 130		
Groove Dimension	ØA	ØB	F
	160.00	140.00	13.00

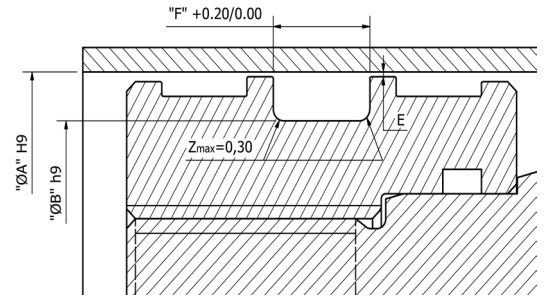

165.00

Part No	PPS 1650 1400 130		
Groove Dimension	ØA	ØB	F
	165.00	140.00	13.00

165.00

Part No	PPS 1650 1400 160		
Groove Dimension	ØA	ØB	F
	165.00	140.00	16.00

165.00

Part No	PPS 1650 1500 120		
Groove Dimension	ØA	ØB	F
	165.00	150.00	12.00

170.00

Part No	PPS 1700 1450 200		
Groove Dimension	ØA	ØB	F
	170.00	145.00	20.00

170.00

Part No	PPS 1700 1500 100		
Groove Dimension	ØA	ØB	F
	170.00	150.00	10.00

170.00

Part No	PPS 1700 1500 190		
Groove Dimension	ØA	ØB	F
	170.00	150.00	19.00

170.00

Part No	PPS 1700 1550 120		
Groove Dimension	ØA	ØB	F
	170.00	155.00	12.00

170.00

Part No	PPS 1700 1580 100		
Groove Dimension	ØA	ØB	F
	170.00	158.00	10.00

175.00

Part No	PPS 1750 1600 120		
Groove Dimension	ØA	ØB	F
	175.00	160.00	12.00

180.00

Part No	PPS 1800 1650 120		
Groove Dimension	ØA	ØB	F
	180.00	165.00	12.00

185.00

Part No	PPS 1850 1650 160		
Groove Dimension	ØA	ØB	F
	185.00	165.00	16.00

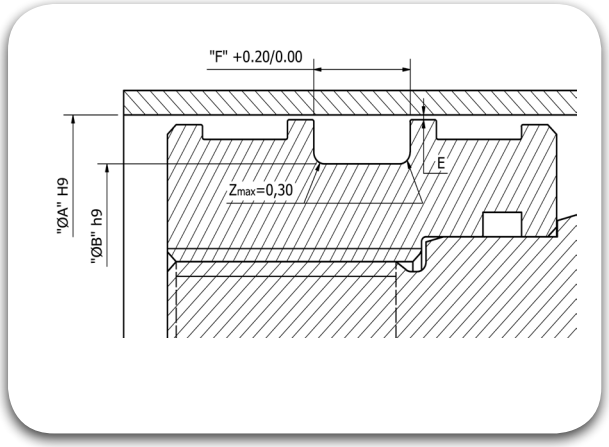

185.00

Part No	PPS 1850 1700 120				
Groove Dimension	ØA	x	ØB	x	F
	185.00		170.00		12.00

195.00

Part No	PPS 1950 1800 120				
Groove Dimension	ØA	x	ØB	x	F
	195.00		180.00		12.00

200.00

Part No	PPS 2000 1700 160				
Groove Dimension	ØA	x	ØB	x	F
	200.00		170.00		16.00

200.00

Part No	PPS 2000 1700 190				
Groove Dimension	ØA	x	ØB	x	F
	200.00		170.00		19.00

200.00

Part No	PPS 2000 1800 130				
Groove Dimension	ØA	x	ØB	x	F
	200.00		180.00		13.00

200.00

Part No	PPS 2000 1880 100				
Groove Dimension	ØA	x	ØB	x	F
	200.00		188.00		10.00

210.00

Part No	PPS 2100 1850 130				
Groove Dimension	ØA	x	ØB	x	F
	210.00		185.00		13.00

220.00

Part No	PPS 2200 1800 210				
Groove Dimension	ØA	x	ØB	x	F
	220.00		180.00		21.00

220.00

Part No	PPS 2200 1900 230				
Groove Dimension	ØA	x	ØB	x	F
	220.00		190.00		23.00

220.00

Part No	PPS 2200 2000 160				
Groove Dimension	ØA	x	ØB	x	F
	220.00		200.00		16.00

240.00

Part No	PPS 2400 2100 180				
Groove Dimension	ØA	x	ØB	x	F
	240.00		210.00		18.00

245.00

Part No	PPS 2450 2250 160				
Groove Dimension	ØA	x	ØB	x	F
	245.00		225.00		16.00

245.00

Part No	PPS 2450 2300 120				
Groove Dimension	ØA	x	ØB	x	F
	245.00		230.00		12.00

250.00		ØA	ØB	F
Part No	PPS 2500 2200 160			
Groove Dimension		250.00	220.00	16.00

250.00		ØA	ØB	F
Part No	PPS 2500 2200 220			
Groove Dimension		250.00	220.00	22.00

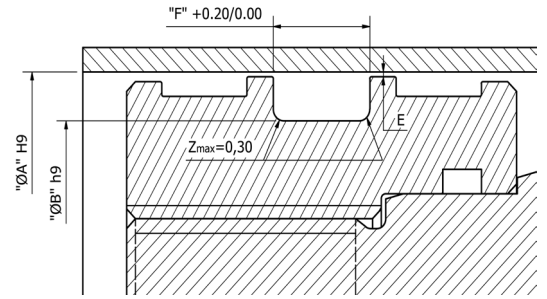

250.00		ØA	ØB	F
Part No	PPS 2500 2300 160			
Groove Dimension		250.00	230.00	16.00

270.00		ØA	ØB	F
Part No	PPS 2700 2400 230			
Groove Dimension		270.00	240.00	23.00

270.00		ØA	ØB	F
Part No	PPS 2700 2500 160			
Groove Dimension		270.00	250.00	16.00

280.00		ØA	ØB	F
Part No	PPS 2800 2500 190			
Groove Dimension		280.00	250.00	19.00

290.00		ØA	ØB	F
Part No	PPS 2900 2700 160			
Groove Dimension		290.00	270.00	16.00

290.00		ØA	ØB	F
Part No	PPS 2900 2700 180			
Groove Dimension		290.00	270.00	18.00

300.00		ØA	ØB	F
Part No	PPS 3000 2700 160			
Groove Dimension		300.00	270.00	16.00

300.00		ØA	ØB	F
Part No	PPS 3000 2800 160			
Groove Dimension		300.00	280.00	16.00

320.00		ØA	ØB	F
Part No	PPS 3200 2900 190			
Groove Dimension		320.00	290.00	19.00

320.00		ØA	ØB	F
Part No	PPS 3200 3000 160			
Groove Dimension		320.00	300.00	16.00

340.00		ØA	ØB	F
Part No	PPS 3400 3200 160			
Groove Dimension		340.00	320.00	16.00

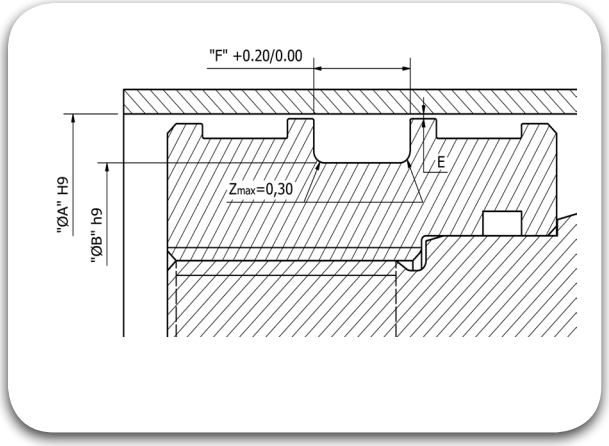

360.00

Part No	PPS 3600 3200 220				
Groove Dimension	ØA	x	ØB	x	F
	360.00		320.00		22.00

360.00

Part No	PPS 3600 3400 160				
Groove Dimension	ØA	x	ØB	x	F
	360.00		340.00		16.00

370.00

Part No	PPS 3700 3500 160				
Groove Dimension	ØA	x	ØB	x	F
	370.00		350.00		16.00

380.00

Part No	PPS 3800 3600 160				
Groove Dimension	ØA	x	ØB	x	F
	380.00		360.00		16.00

390.00

Part No	PPS 3900 3600230				
Groove Dimension	ØA	x	ØB	x	F
	390.00		360.00		23.00

Piston Seals

PPK

TRIADA
TECHNOLOGIES

#SealingExcellence

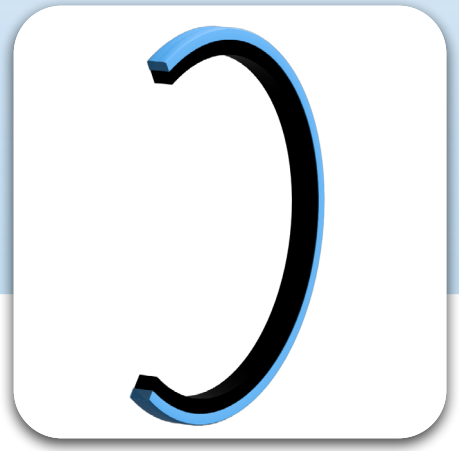


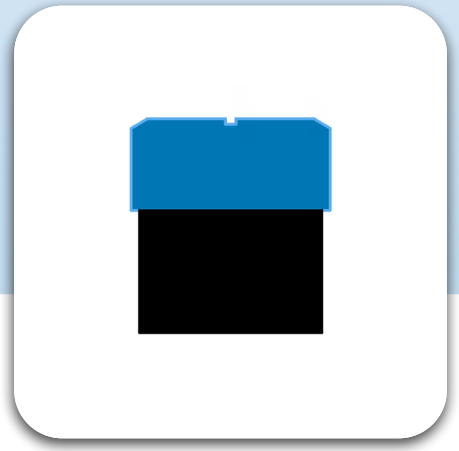

Description

The PPK is a bidirectional seal and composed of two elements. The dynamic seal is a ring in TRIATHANE® (Polyurethane) while the static seal is a TRIAFLEX® (Square Ring) also acting as energizer. Depending on the application, media, cycle speed etc., the Polyurethane compound is selected and the Square Ring compound is selected considering the media compatibility, temperature etc.

Reciprocating | Oscillating | Rotary | Helix | Static | Single Acting | Double Acting

Diameter Range	Ø10.00 – Ø320.00
Standard material	TRIATHANE® T479 (Polyurethane) Sealing Element with Energiser in TRIAFLEX®T571 (NBR 70 Shores)
Temperature(°C)	-30ºC to 130ºC
Speed	≤ 0.50 m/s
Fluids	Hydraulic fluids (Mineral Oil based), Water, Air etc depending on Seal Compounds selected
Pressure	≤ 400 bar

Material Details

Seal Material	Seal Material Code	Square-Ring Material	Square-Ring Material code
TRIATHANE® Poly-Urethane	T479	TRIAFLEX® NBR 70 Shore	N

Nomenclature

Part No	PPK	0250	0175	032	T479	N
	Seal profile	Bore Dia x 10	Groove Dia x 10	Groove Width x 10	Seal Material Code	Square-Ring Material

Groove Details

Operating Pressure Bar	Radial Clearance "E" max	
	ØA < 60mm	ØA > 60mm
50	0.40	0.50
100	0.30	0.40
200	0.20	0.30
300	0.15	0.20
400	0.10	0.15

Groove Details

Groove Width	Radius "Z"
0.00 - 3.20	0.20
3.30 - 4.20	0.30
4.30 - 8.10	0.40

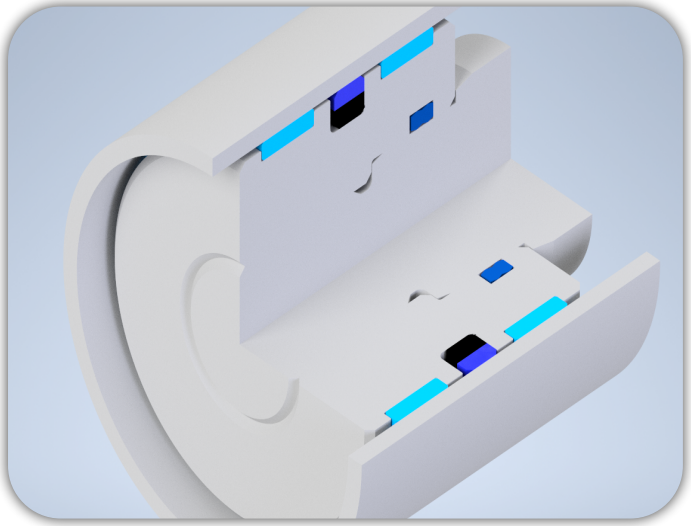

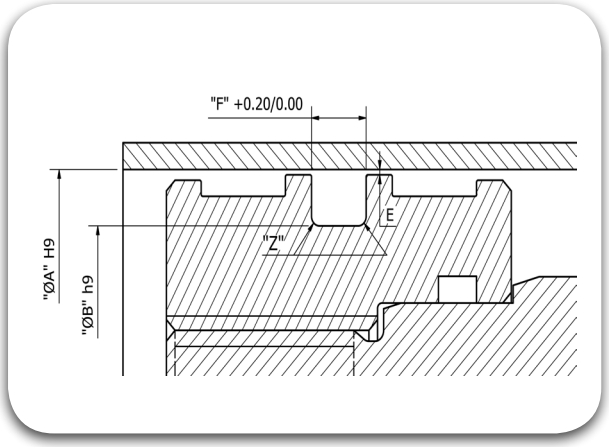

25.00

Part No	PPK 0250 0175 032				
Groove Dimension	ØA	x	ØB	x	F
	25.00		17.50		3.20

32.00

Part No	PPK 0320 0245 032				
Groove Dimension	ØA	x	ØB	x	F
	32.00		24.50		3.20

40.00

Part No	PPK 0400 0290 042				
Groove Dimension	ØA	x	ØB	x	F
	40.00		29.00		4.20

45.00

Part No	PPK 0450 0340 042				
Groove Dimension	ØA	x	ØB	x	F
	45.00		34.00		4.20

50.00

Part No	PPK 0500 0390 042				
Groove Dimension	ØA	x	ØB	x	F
	50.00		39.00		4.20

50.00

Part No	PPK 0500 0345 063				
Groove Dimension	ØA	x	ØB	x	F
	50.00		34.50		6.30

50.00

Part No	PPK 0500 0370 063				
Groove Dimension	ØA	x	ØB	x	F
	50.00		37.00		6.30

55.00

Part No	PPK 0550 0440 042				
Groove Dimension	ØA	x	ØB	x	F
	55.00		44.00		4.20

60.00

Part No	PPK 0600 0490 042				
Groove Dimension	ØA	x	ØB	x	F
	60.00		49.00		4.20

60.00

Part No	PPK 0600 0445 063				
Groove Dimension	ØA	x	ØB	x	F
	60.00		44.50		6.30

63.00

Part No	PPK 0630 0520 042				
Groove Dimension	ØA	x	ØB	x	F
	63.00		52.00		4.20

63.00

Part No	PPK 0630 0500 063				
Groove Dimension	ØA	x	ØB	x	F
	63.00		50.00		6.30

65.00

Part No	PPK 0650 0540 042				
Groove Dimension	ØA	x	ØB	x	F
	65.00		54.00		4.20

70.00		ØA	ØB	F
Part No	PPK 0700 0590 042			
Groove Dimension		70.00	59.00	4.20

70.00		ØA	ØB	F
Part No	PPK 0700 0545 063			
Groove Dimension		70.00	54.50	6.30

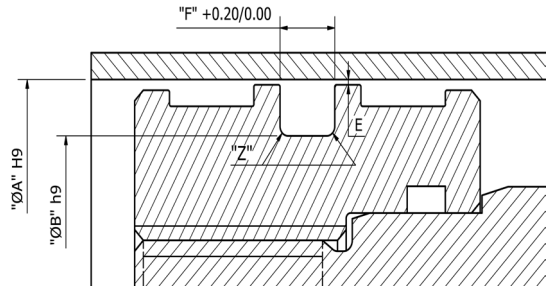

70.00		ØA	ØB	F
Part No	PPK 0700 0570 063			
Groove Dimension		70.00	57.00	6.30

75.00		ØA	ØB	F
Part No	PPK 0750 0640 042			
Groove Dimension		75.00	64.00	4.20

80.00		ØA	ØB	F
Part No	PPK 0800 0645 063			
Groove Dimension		80.00	64.50	6.30

85.00		ØA	ØB	F
Part No	PPK 0850 0695 063			
Groove Dimension		85.00	69.50	6.30

90.00		ØA	ØB	F
Part No	PPK 0900 0745 063			
Groove Dimension		90.00	74.50	6.30

95.00		ØA	ØB	F
Part No	PPK 0950 0795 063			
Groove Dimension		95.00	79.50	6.30

100.00		ØA	ØB	F
Part No	PPK 1000 0845 063			
Groove Dimension		100.00	84.50	6.30

100.00		ØA	ØB	F
Part No	PPK 1000 0790 081			
Groove Dimension		100.00	79.00	8.10

105.00		ØA	ØB	F
Part No	PPK 1050 0895 063			
Groove Dimension		105.00	89.50	6.30

110.00		ØA	ØB	F
Part No	PPK 1100 0945 063			
Groove Dimension		110.00	94.50	6.30

115.00		ØA	ØB	F
Part No	PPK 1150 0995 063			
Groove Dimension		115.00	99.50	6.30

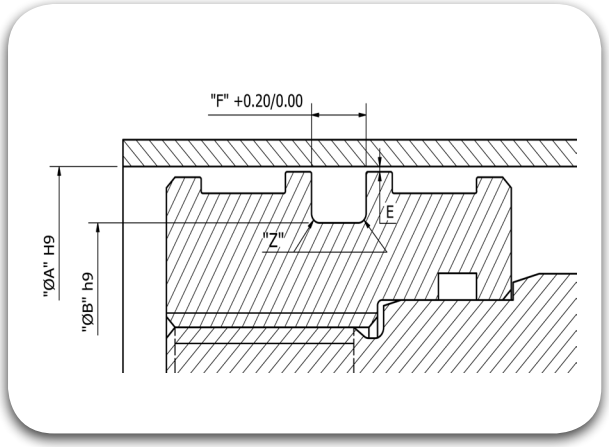

120.00

Part No	PPK 1200 1045 063				
Groove Dimension	ØA	x	ØB	x	F
	120.00		104.50		6.30

125.00

Part No	PPK 1250 1095 063				
Groove Dimension	ØA	x	ØB	x	F
	125.00		109.50		6.30

130.00

Part No	PPK 1300 1145 063				
Groove Dimension	ØA	x	ØB	x	F
	130.00		114.50		6.30

130.00

Part No	PPK 1300 1090 081				
Groove Dimension	ØA	x	ØB	x	F
	130.00		109.00		8.10

135.00

Part No	PPK 1350 1140 081				
Groove Dimension	ØA	x	ØB	x	F
	135.00		114.00		8.10

140.00

Part No	PPK 1400 1190 081				
Groove Dimension	ØA	x	ØB	x	F
	140.00		119.00		8.10

145.00

Part No	PPK 1450 1240 081				
Groove Dimension	ØA	x	ØB	x	F
	145.00		124.00		8.10

150.00

Part No	PPK 1500 1290 081				
Groove Dimension	ØA	x	ØB	x	F
	150.00		129.00		8.10

155.00

Part No	PPK 1550 1340 081				
Groove Dimension	ØA	x	ØB	x	F
	155.00		134.00		8.10

160.00

Part No	PPK 1600 1390 081				
Groove Dimension	ØA	x	ØB	x	F
	160.00		139.00		8.10

160.00

Part No	PPK 1600 1440 063				
Groove Dimension	ØA	x	ØB	x	F
	160.00		144.00		6.30

170.00

Part No	PPK 1700 1490 081				
Groove Dimension	ØA	x	ØB	x	F
	170.00		149.00		8.10

180.00

Part No	PPK 1800 1590 081				
Groove Dimension	ØA	x	ØB	x	F
	180.00		159.00		8.10

190.00

Part No	PPK 1900 1690 081					
Groove Dimension	ØA	x	ØB	x	F	
	190.00		169.00		8.10	

200.00

Part No	PPK 2000 1790 081					
Groove Dimension	ØA	x	ØB	x	F	
	200.00		179.00		8.10	

220.00

Part No	PPK 2200 1990 081					
Groove Dimension	ØA	x	ØB	x	F	
	220.00		199.00		8.10	

250.00

Part No	PPK 2500 2290 081					
Groove Dimension	ØA	x	ØB	x	F	
	250.00		229.00		8.10	

280.00

Part No	PPK 2800 2590 081					
Groove Dimension	ØA	x	ØB	x	F	
	280.00		259.00		8.10	

320.00

Part No	PPK 3200 2990 081					
Groove Dimension	ØA	x	ØB	x	F	
	320.00		299.00		8.10	

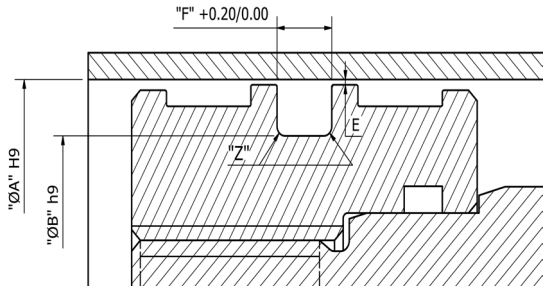

Piston Seals

PSK

TRIADA
TECHNOLOGIES

#Sealing**Excellence**




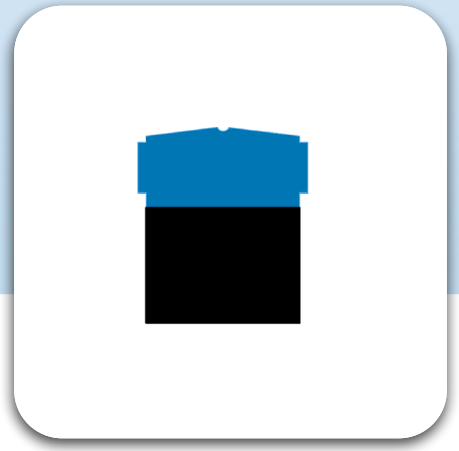

Description

The PSK is a bidirectional seal and composed of two elements. The dynamic seal is a ring in TRIATHANE® (Polyurethane) while the static seal is a TRIAFLEX® (Square Ring) also acting as energizer. The taper on the seal lip provide wear resistance, and low co-efficient of friction. Depending on the application, media, cycle speed etc., the Polyurethane compound is selected and the Square Ring compound is selected considering the media compatibility, temperature etc.



Diameter Range	Ø10.00 – Ø320.00
Standard material	TRIATHANE® T479 (Polyurethane) Sealing Element with Energiser in TRIAFLEX® T571 (NBR 70 Shores)
Temperature(°C)	-30ºC to 130ºC
Speed	≤ 0.50 m/s
Fluids	Hydraulic fluids (Mineral Oil based).
Pressure	≤ 400 bar

Material Details

Seal Material	Seal Material Code	Square-Ring Material	Square-Ring Material code
TRIATHANE® Poly-Urethane	T479	TRIAFLEX® T571 NBR 70 Shore	N

Nomenclature

Part No	PSK	0250	0175	032	T479	N
	Seal profile	Bore Dia x 10	Groove Dia x 10	Groove Width x 10	Seal Material Code	Square-Ring Material

Groove Details

Operating Pressure Bar	Radial Clearance "E" max	
	ØA < 60mm	ØA > 60mm
50	0.40	0.50
100	0.30	0.40
200	0.20	0.30
300	0.15	0.20
400	0.10	0.15

Groove Details

Groove Width	Radius "Z"
0.00 - 4.20	0.30
4.30 - 8.10	0.40

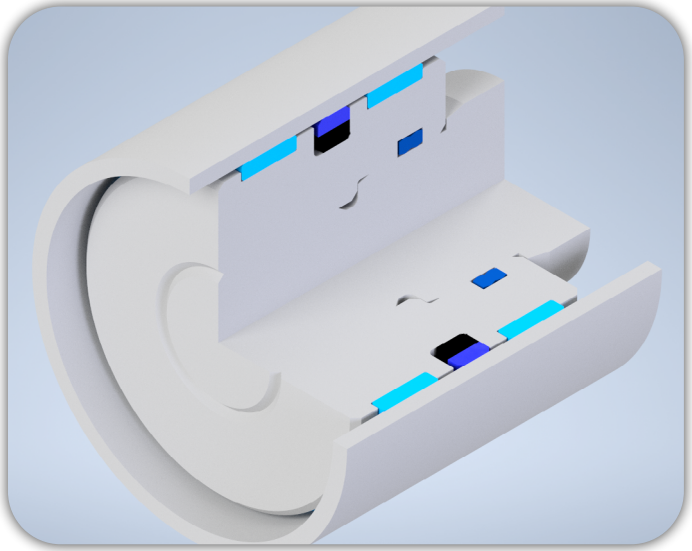

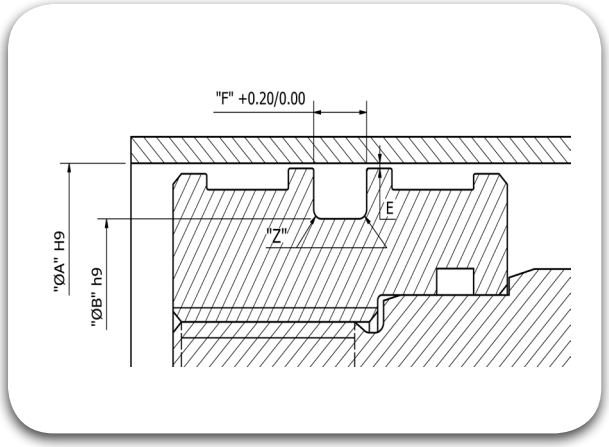

40.00

Part No	PSK 0400 0245 063				
Groove Dimension	ØA	x	ØB	x	F
	40.00		24.50		6.30

40.00

Part No	PSK 0400 0290 042				
Groove Dimension	ØA	x	ØB	x	F
	40.00		29.00		4.20

45.00

Part No	PSK 0450 0340 042				
Groove Dimension	ØA	x	ØB	x	F
	45.00		34.00		4.20

50.00

Part No	PSK 0500 0345 063				
Groove Dimension	ØA	x	ØB	x	F
	50.00		34.50		6.30

50.00

Part No	PSK 0500 0390 042				
Groove Dimension	ØA	x	ØB	x	F
	50.00		39.00		4.20

55.00

Part No	PSK 0550 0395 063				
Groove Dimension	ØA	x	ØB	x	F
	55.00		39.50		6.30

55.00

Part No	PSK 0550 0440 042				
Groove Dimension	ØA	x	ØB	x	F
	55.00		44.00		4.20

60.00

Part No	PSK 0600 0445 063				
Groove Dimension	ØA	x	ØB	x	F
	60.00		44.50		6.30

63.00

Part No	PSK 0630 0475 063				
Groove Dimension	ØA	x	ØB	x	F
	63.00		47.50		6.30

63.00

Part No	PSK 0630 0520 042				
Groove Dimension	ØA	x	ØB	x	F
	63.00		52.00		4.20

65.00

Part No	PSK 0650 0495 063				
Groove Dimension	ØA	x	ØB	x	F
	65.00		49.50		6.30

70.00

Part No	PSK 0700 0545 063				
Groove Dimension	ØA	x	ØB	x	F
	70.00		54.50		6.30

70.00

Part No	PSK 0700 0590 042				
Groove Dimension	ØA	x	ØB	x	F
	70.00		59.00		4.20

		ØA	ØB	F
75.00	PSK 0750 0595 063	75.00	59.50	6.30
80.00	PSK 0800 0590 081	80.00	59.00	8.10
80.00	PSK 0800 0645 063	80.00	64.50	6.30
85.00	PSK 0850 0695 063	85.00	69.50	6.30
90.00	PSK 0900 0690 081	90.00	69.00	8.10
90.00	PSK 0900 0745 063	90.00	74.50	6.30
95.00	PSK 0950 0795 063	95.00	79.50	6.30
100.00	PSK 1000 0790 081	100.00	79.00	8.10
100.00	PSK 1000 0845 063	100.00	84.50	6.30
120.00	PSK 1200 0990 081	120.00	99.00	8.10
120.00	PSK 1200 1045 063	120.00	104.50	6.30
125.00	PSK 1250 1040 081	125.00	104.00	8.10
125.00	PSK 1250 1095 063	125.00	109.50	6.30

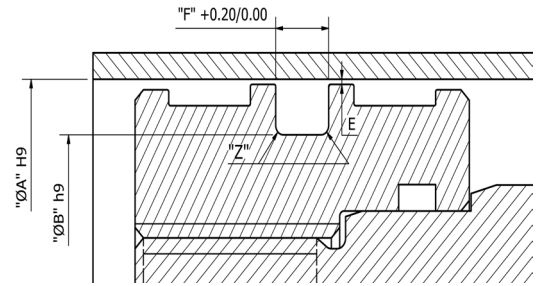

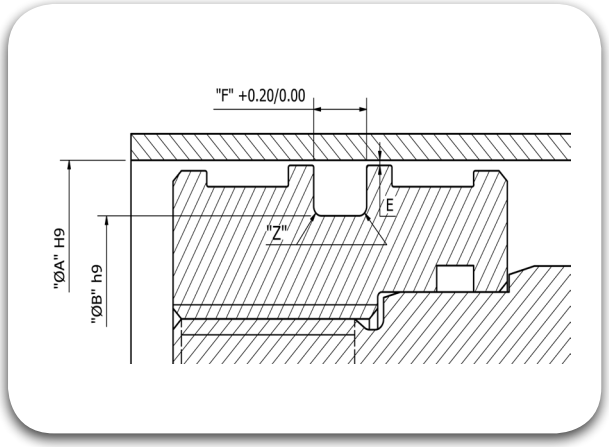

130.00

Part No	PSK 1300 1090 081
Groove Dimension	ØA x ØB x F 130.00 x 109.00 x 8.10

Piston Seals

PGK

TRIADA
TECHNOLOGIES

#SealingExcellence

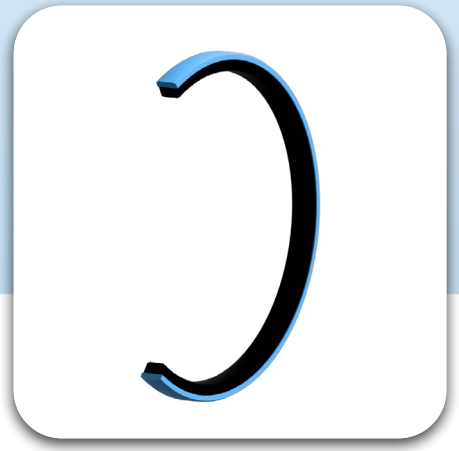
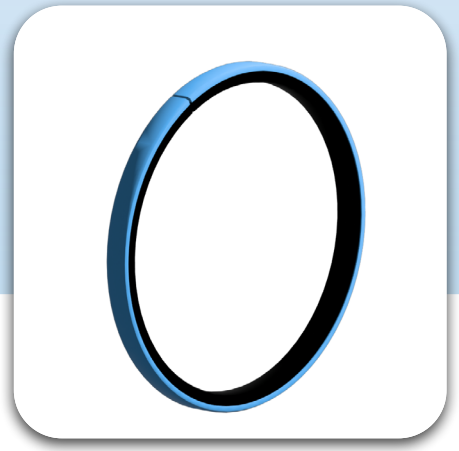

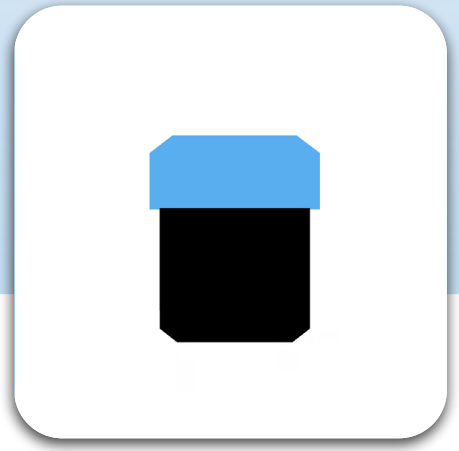

Description

The PGK is a bidirectional seal and composed of two elements. The dynamic seal is a ring in TRIAMIDE® (Glass Filled Polyamide) while the static seal is a TRIAFLEX® (Square Ring) also acting as energizer. The Cut on the seal prevents the seal failure in case of a ballooning or expansion of the Cylinder and it is so designed that the oil does not move from the pressurized chamber to the other. Depending on the application, media, cycle speed etc., the Polyamide compound is selected and the Square Ring compound is selected considering the media compatibility, temperature etc.

Diameter Range	Ø8.00 – Ø320.00
Standard material	TRIAMIDE® T486 (Glass Filled Polyamide) with the Energizer in TRIAFLEX® T571 (NBR 70 Shores)
Temperature(°C)	-30ºC to 130ºC .
Speed	≤ 1.00 m/s
Fluids	Mineral oils (for other media please check with Triada® Application Engineering)
Pressure	≤ 600 bar

Reciprocating | Oscillating | Rotary | Helix | Static | Single Acting | Double Acting

Material Details

Seal Material	Seal Material Code	Square-Ring Material	Square-Ring Material code
TRIAMIDE® Polyamide + Glass Fillings	T486	TRIAFLEX® T571 NBR 70 Shore	N

Nomenclature

Part No	PGK	0250	0175	032	T486	N
	Seal profile	Bore Dia x 10	Groove Dia x 10	Groove Width x 10	Seal Material Code	Square-Ring Material

Groove Details

Operating Pressure Bar	Radial Clearance "E" max		
	F = 4.20	F = 6.30	F = 8.10
0 - 200	0.50	0.70	0.80
200 - 500	0.35	0.50	0.60
500 - 600	H8 / F7	H8 / F7	H8 / F7

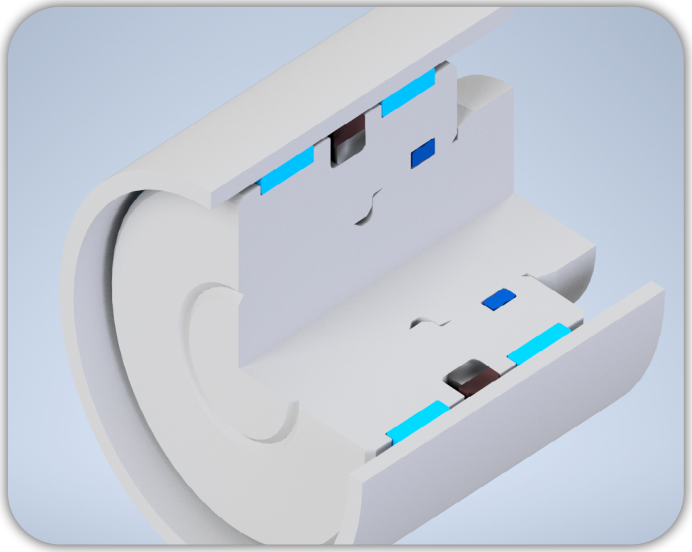

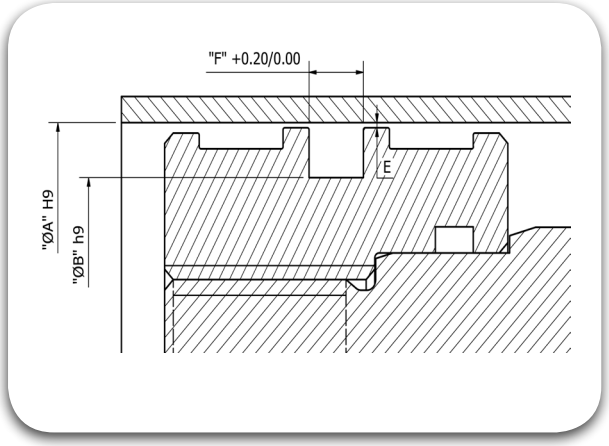

60.00

Part No	PGK 0600 0490 042				
Groove Dimension	ØA	x	ØB	x	F
	60.00		49.00		4.20

63.00

Part No	PGK 0630 0475 063				
Groove Dimension	ØA	x	ØB	x	F
	63.00		47.50		6.30

70.00

Part No	PGK 0700 0545 063				
Groove Dimension	ØA	x	ØB	x	F
	70.00		54.50		6.30

75.00

Part No	PGK 0750 0540 081				
Groove Dimension	ØA	x	ØB	x	F
	75.00		54.00		8.10

80.00

Part No	PGK 0800 0590 081				
Groove Dimension	ØA	x	ØB	x	F
	80.00		59.00		8.10

80.00

Part No	PGK 0800 0645 063				
Groove Dimension	ØA	x	ØB	x	F
	80.00		64.50		6.30

85.00

Part No	PGK 0850 0695 063				
Groove Dimension	ØA	x	ØB	x	F
	85.00		69.50		6.30

90.00

Part No	PGK 0900 0690 081				
Groove Dimension	ØA	x	ØB	x	F
	90.00		69.00		8.10

90.00

Part No	PGK 0900 0745 063				
Groove Dimension	ØA	x	ØB	x	F
	90.00		74.50		6.30

95.00

Part No	PGK 0950 0795 063				
Groove Dimension	ØA	x	ØB	x	F
	95.00		79.50		6.30

100.00

Part No	PGK 1000 0790 081				
Groove Dimension	ØA	x	ØB	x	F
	100.00		79.00		8.10

100.00

Part No	PGK 1000 0845 063				
Groove Dimension	ØA	x	ØB	x	F
	100.00		84.50		6.30

105.00

Part No	PGK 1050 0840 081				
Groove Dimension	ØA	x	ØB	x	F
	105.00		84.00		8.10

110.00

Part No	PGK 1100 0890 081					
Groove Dimension	ØA	x	ØB	x	F	
	110.00		89.00		8.10	

110.00

Part No	PGK 1100 0945 063					
Groove Dimension	ØA	x	ØB	x	F	
	110.00		94.50		6.30	

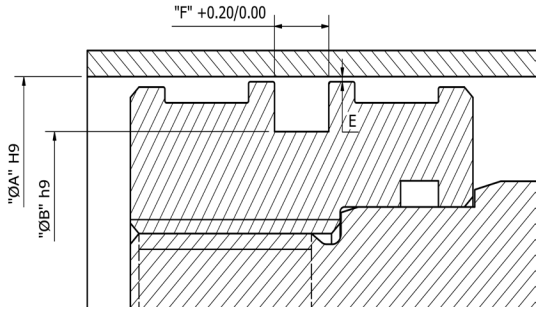

115.00

Part No	PGK 1150 0940 081					
Groove Dimension	ØA	x	ØB	x	F	
	115.00		94.00		8.10	

120.00

Part No	PGK 1200 0990 081					
Groove Dimension	ØA	x	ØB	x	F	
	120.00		99.00		8.10	

125.00

Part No	PGK 1250 1040 081					
Groove Dimension	ØA	x	ØB	x	F	
	125.00		104.00		8.10	

130.00

Part No	PGK 1300 1090 081					
Groove Dimension	ØA	x	ØB	x	F	
	130.00		109.00		8.10	

135.00

Part No	PGK 1350 1140 081					
Groove Dimension	ØA	x	ØB	x	F	
	135.00		114.00		8.10	

140.00

Part No	PGK 1400 1190 081					
Groove Dimension	ØA	x	ØB	x	F	
	140.00		119.00		8.10	

145.00

Part No	PGK 1450 1240 081					
Groove Dimension	ØA	x	ØB	x	F	
	145.00		124.00		8.10	

150.00

Part No	PGK 1500 1290 081					
Groove Dimension	ØA	x	ØB	x	F	
	150.00		129.00		8.10	

160.00

Part No	PGK 1600 1390 081					
Groove Dimension	ØA	x	ØB	x	F	
	160.00		139.00		8.10	

165.00

Part No	PGK 1650 1440 081					
Groove Dimension	ØA	x	ØB	x	F	
	165.00		144.00		8.10	

170.00

Part No	PGK 1700 1490 081					
Groove Dimension	ØA	x	ØB	x	F	
	170.00		149.00		8.10	

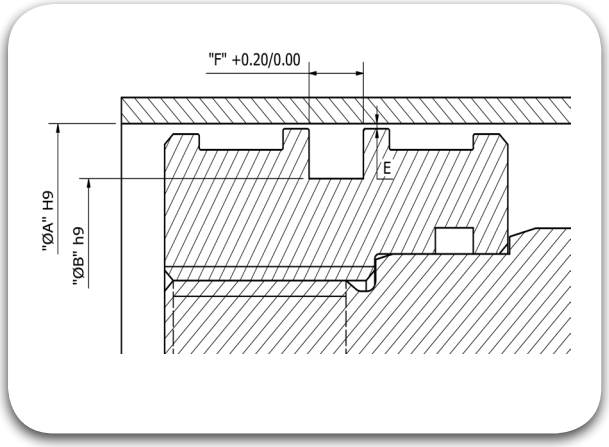

175.00

Part No	PGK 1750 1540 081				
Groove Dimension	ØA	x	ØB	x	F
	175.00		154.00		8.10

180.00

Part No	PGK 1800 1590 081				
Groove Dimension	ØA	x	ØB	x	F
	180.00		159.00		8.10

190.00

Part No	PGK 1900 1690 081				
Groove Dimension	ØA	x	ØB	x	F
	190.00		169.00		8.10

200.00

Part No	PGK 2000 1790 081				
Groove Dimension	ØA	x	ØB	x	F
	200.00		179.00		8.10

210.00

Part No	PGK 2100 1890 081				
Groove Dimension	ØA	x	ØB	x	F
	210.00		189.00		8.10

220.00

Part No	PGK 2200 1990 081				
Groove Dimension	ØA	x	ØB	x	F
	220.00		199.00		8.10

230.00

Part No	PGK 2300 2090 081				
Groove Dimension	ØA	x	ØB	x	F
	230.00		209.00		8.10

250.00

Part No	PGK 2500 2290 081				
Groove Dimension	ØA	x	ØB	x	F
	250.00		229.00		8.10

260.00

Part No	PGK 2600 2390 081				
Groove Dimension	ØA	x	ØB	x	F
	260.00		239.00		8.10

280.00

Part No	PGK 2800 2550 081				
Groove Dimension	ØA	x	ØB	x	F
	280.00		255.50		8.10

Piston Seals

PAB

TRIADA
TECHNOLOGIES

#SealingExcellence


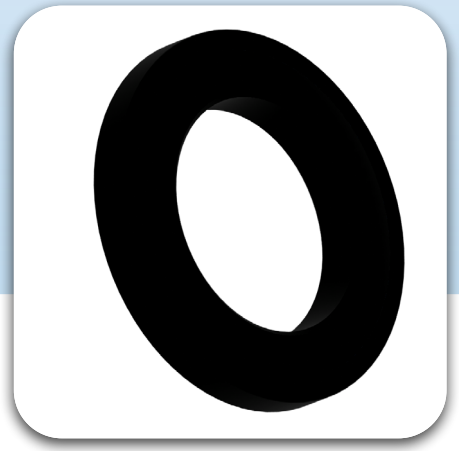

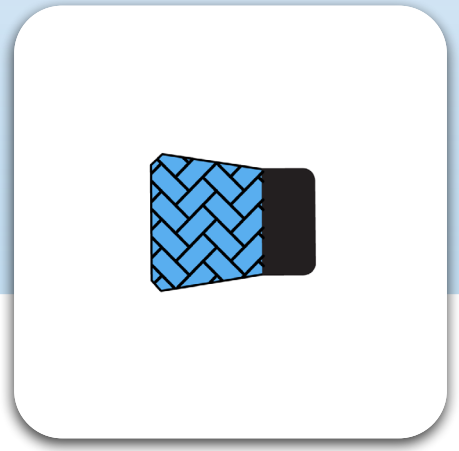

Description

The PAB type seal is a compact Piston seal which possess an excellent sealing performance even at the low pressure due to the radial preload; the material used for this seal provides high wear resistance and good chemical resistance.

Diameter Range	Ø30.00 – Ø482.00
Standard material	TRIAFLEX® T543 (cotton fabric reinforced material)
Temperature(°C)	-35ºC to 130ºC
Speed	≤ 0.50 m/s
Fluids	Mineral Hydraulic Fluids (for other media, please contact TRIADA® Application Engineering)
Pressure	≤ 250 bar

Reciprocating · Oscillating · Rotary · Helix · Static · Single Acting · Double Acting

Material Details

Seal Material	Seal Material Code
TRIAFLEX® cotton fabric reinforced material impregnated with NBR 70 Shores A	T543

Nomenclature

Part No	PAB	0100	0060	050	T543
	Seal profile	Bore Dia x 10	Groove Dia x 10	Groove Width x 10	Seal Material Code

Groove Details

Operating Pressure Bar	Radial Clearance "E" max
160	0.20
250	0.10

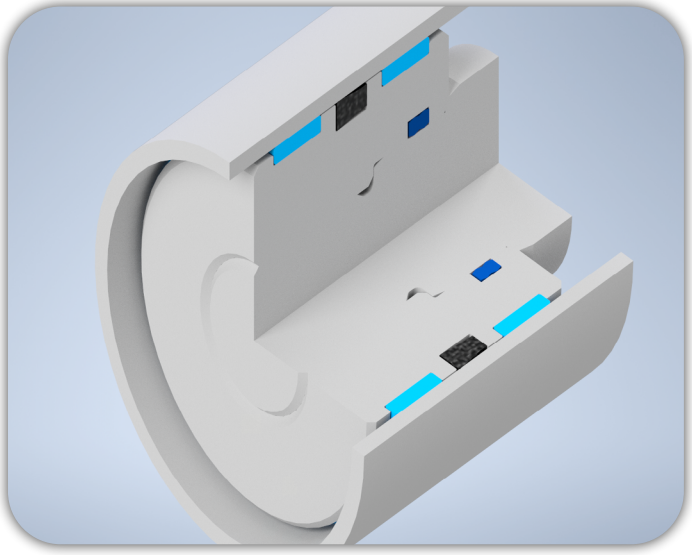

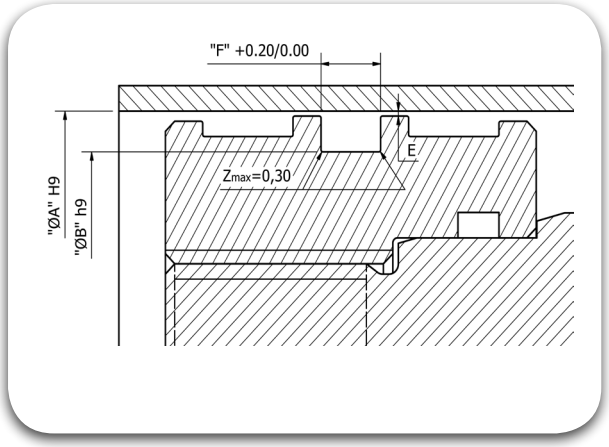

10.00

Part No	PAB 0100 0060 050				
Groove Dimension	ØA	x	ØB	x	F
	10.00		6.00		5.00

12.70

Part No	PAB 0127 0047 064				
Groove Dimension	ØA	x	ØB	x	F
	12.70		4.76		6.40

14.00

Part No	PAB 0140 0060 064				
Groove Dimension	ØA	x	ØB	x	F
	14.00		6.00		6.40

14.28

Part No	PAB 0142 0063 068				
Groove Dimension	ØA	x	ØB	x	F
	14.28		6.35		6.85

15.00

Part No	PAB 0150 0080 064				
Groove Dimension	ØA	x	ØB	x	F
	15.00		8.00		6.40

17.00

Part No	PAB 0170 0100 064				
Groove Dimension	ØA	x	ØB	x	F
	17.00		10.00		6.40

18.00

Part No	PAB 0180 0100 060				
Groove Dimension	ØA	x	ØB	x	F
	18.00		10.00		6.00

18.00

Part No	PAB 0180 0120 075				
Groove Dimension	ØA	x	ØB	x	F
	18.00		12.00		7.50

19.00

Part No	PAB 0190 0120 063				
Groove Dimension	ØA	x	ØB	x	F
	19.00		12.00		6.30

19.05

Part No	PAB 0190 0127 052				
Groove Dimension	ØA	x	ØB	x	F
	19.05		12.70		5.25

20.00

Part No	PAB 0200 0120 064				
Groove Dimension	ØA	x	ØB	x	F
	20.00		12.00		6.40

20.63

Part No	PAB 0206 0110 076				
Groove Dimension	ØA	x	ØB	x	F
	20.63		11.00		7.65

20.63

Part No	PAB 0206 0127 068				
Groove Dimension	ØA	x	ØB	x	F
	20.63		12.70		6.85

22.00

Part No	PAB 0220 0140 065					
Groove Dimension	ØA	x	ØB	x	F	
	22.00		14.00		6.50	

22.22

Part No	PAB 0222 0127 076					
Groove Dimension	ØA	x	ØB	x	F	
	22.22		12.70		7.65	

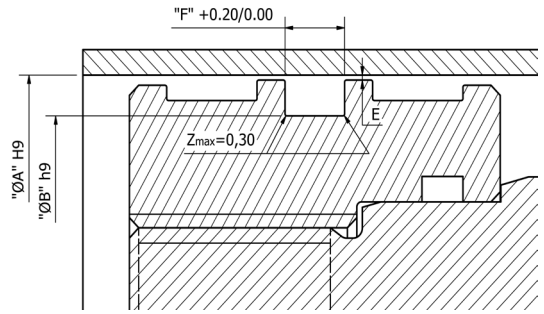

22.22

Part No	PAB 0222 0158 052					
Groove Dimension	ØA	x	ØB	x	F	
	22.22		15.87		5.25	

23.00

Part No	PAB 0230 0150 064					
Groove Dimension	ØA	x	ØB	x	F	
	23.00		15.00		6.40	

23.81

Part No	PAB 0238 0142 076					
Groove Dimension	ØA	x	ØB	x	F	
	23.81		14.28		7.65	

24.00

Part No	PAB 0240 0160 064					
Groove Dimension	ØA	x	ØB	x	F	
	24.00		16.00		6.40	

24.00

Part No	PAB 0240 0160 070					
Groove Dimension	ØA	x	ØB	x	F	
	24.00		16.00		7.00	

25.00

Part No	PAB 0250 0180 080					
Groove Dimension	ØA	x	ØB	x	F	
	25.00		18.00		8.00	

25.40

Part No	PAB 0254 0158 076					
Groove Dimension	ØA	x	ØB	x	F	
	25.40		15.87		7.65	

26.00

Part No	PAB 0260 0180 064					
Groove Dimension	ØA	x	ØB	x	F	
	26.00		18.00		6.40	

26.00

Part No	PAB 0260 0180 070					
Groove Dimension	ØA	x	ØB	x	F	
	26.00		18.00		7.00	

27.00

Part No	PAB 0270 0200 065					
Groove Dimension	ØA	x	ØB	x	F	
	27.00		20.00		6.50	

28.00

Part No	PAB 0280 0180 063					
Groove Dimension	ØA	x	ØB	x	F	
	28.00		18.00		6.30	

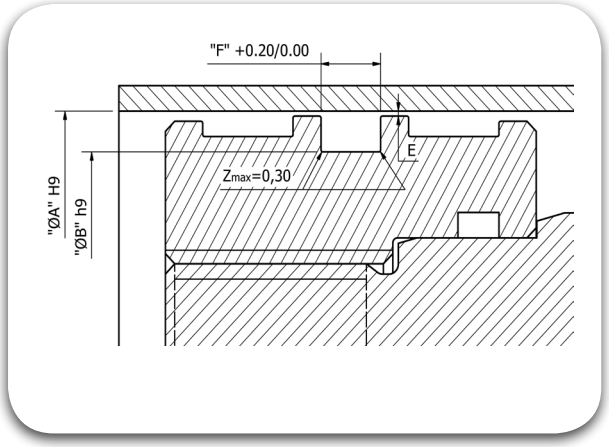

28.00

Part No	PAB 0280 0200 063				
Groove Dimension	ØA	x	ØB	x	F
	28.00		20.00		6.30

28.00

Part No	PAB 0280 0200 070				
Groove Dimension	ØA	x	ØB	x	F
	28.00		20.00		7.00

28.58

Part No	PAB 0285 0190 090				
Groove Dimension	ØA	x	ØB	x	F
	28.58		19.05		9.00

30.00

Part No	PAB 0300 0200 085				
Groove Dimension	ØA	x	ØB	x	F
	30.00		20.00		8.50

30.00

Part No	PAB 0300 0220 065				
Groove Dimension	ØA	x	ØB	x	F
	30.00		22.00		6.50

30.00

Part No	PAB 0300 0220 070				
Groove Dimension	ØA	x	ØB	x	F
	30.00		22.00		7.00

30.16

Part No	PAB 0301 0174 100				
Groove Dimension	ØA	x	ØB	x	F
	30.16		17.46		10.00

31.75

Part No	PAB 0317 0190 085				
Groove Dimension	ØA	x	ØB	x	F
	31.75		19.05		8.50

31.75

Part No	PAB 0317 0222 092				
Groove Dimension	ØA	x	ØB	x	F
	31.75		22.22		9.20

31.75

Part No	PAB 0317 0254 052				
Groove Dimension	ØA	x	ØB	x	F
	31.75		25.40		5.25

32.00

Part No	PAB 0320 0240 075				
Groove Dimension	ØA	x	ØB	x	F
	32.00		24.00		7.50

33.00

Part No	PAB 0330 0250 064				
Groove Dimension	ØA	x	ØB	x	F
	33.00		25.00		6.40

33.33

Part No	PAB 0333 0206 100				
Groove Dimension	ØA	x	ØB	x	F
	33.33		20.63		10.00

34.00

Part No	PAB 0340 0240 065					
Groove Dimension	ØA	x	ØB	x	F	
	34.00		24.00		6.50	

34.92

Part No	PAB 0349 0254 068					
Groove Dimension	ØA	x	ØB	x	F	
	34.92		25.40		6.85	

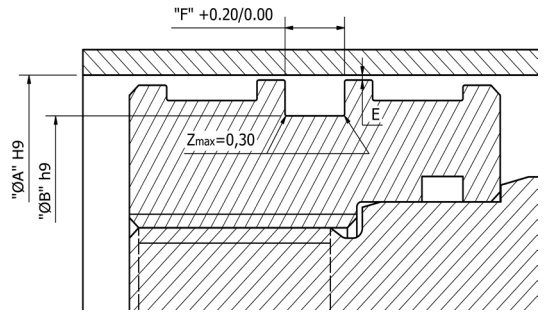

35.00

Part No	PAB 0350 0200 115					
Groove Dimension	ØA	x	ØB	x	F	
	35.00		20.00		11.50	

35.00

Part No	PAB 0350 0220 100					
Groove Dimension	ØA	x	ØB	x	F	
	35.00		22.00		10.00	

35.00

Part No	PAB 0350 0250 090					
Groove Dimension	ØA	x	ØB	x	F	
	35.00		25.00		9.00	

35.00

Part No	PAB 0350 0270 065					
Groove Dimension	ØA	x	ØB	x	F	
	35.00		27.00		6.50	

36.00

Part No	PAB 0360 0280 064					
Groove Dimension	ØA	x	ØB	x	F	
	36.00		28.00		6.40	

36.51

Part No	PAB 0365 0238 100					
Groove Dimension	ØA	x	ØB	x	F	
	36.51		23.81		10.00	

37.50

Part No	PAB 0375 0300 065					
Groove Dimension	ØA	x	ØB	x	F	
	37.50		30.00		6.50	

38.00

Part No	PAB 0380 0250 100					
Groove Dimension	ØA	x	ØB	x	F	
	38.00		25.00		10.00	

38.00

Part No	PAB 0380 0300 064					
Groove Dimension	ØA	x	ØB	x	F	
	38.00		30.00		6.40	

38.10

Part No	PAB 0381 0254 100					
Groove Dimension	ØA	x	ØB	x	F	
	38.10		25.40		10.00	

39.68

Part No	PAB 0396 0281 080					
Groove Dimension	ØA	x	ØB	x	F	
	39.68		28.19		8.00	

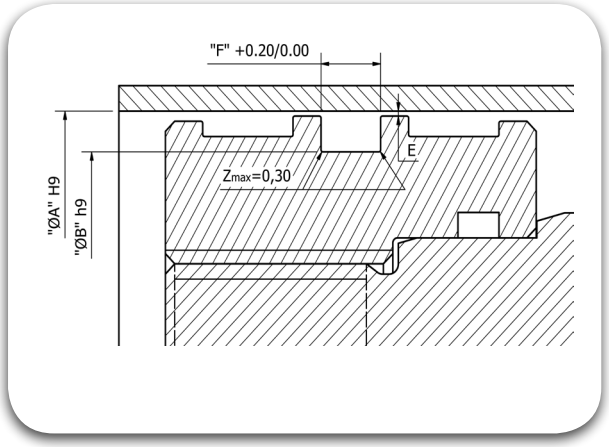

40.00

Part No	PAB 0400 0260 100					
Groove Dimension	ØA	x	ØB	x	F	
	40.00		26.00		10.00	

40.00

Part No	PAB 0400 0300 075					
Groove Dimension	ØA	x	ØB	x	F	
	40.00		30.00		7.50	

40.00

Part No	PAB 0400 0320 063					
Groove Dimension	ØA	x	ØB	x	F	
	40.00		32.00		6.30	

40.00

Part No	PAB 0400 0320 090					
Groove Dimension	ØA	x	ØB	x	F	
	40.00		32.00		9.00	

41.27

Part No	PAB 0412 0254 116					
Groove Dimension	ØA	x	ØB	x	F	
	41.27		25.40		11.60	

41.27

Part No	PAB 0412 0285 100					
Groove Dimension	ØA	x	ØB	x	F	
	41.27		28.57		10.00	

41.60

Part No	PAB 0416 0300 080					
Groove Dimension	ØA	x	ØB	x	F	
	41.60		30.00		8.00	

43.00

Part No	PAB 0430 0350 065					
Groove Dimension	ØA	x	ØB	x	F	
	43.00		35.00		6.50	

43.00

Part No	PAB 0430 0360 065					
Groove Dimension	ØA	x	ØB	x	F	
	43.00		36.00		6.50	

44.00

Part No	PAB 0440 0250 125					
Groove Dimension	ØA	x	ØB	x	F	
	44.00		25.00		12.50	

44.00

Part No	PAB 0440 0360 064					
Groove Dimension	ØA	x	ØB	x	F	
	44.00		36.00		6.40	

44.45

Part No	PAB 0444 0285 116					
Groove Dimension	ØA	x	ØB	x	F	
	44.45		28.57		11.60	

45.00

Part No	PAB 0450 0300 090					
Groove Dimension	ØA	x	ØB	x	F	
	45.00		30.00		9.00	

45.00

Part No	PAB 0450 0350 080					
Groove Dimension	ØA	x	ØB	x	F	
	45.00		35.00		8.00	

45.00

Part No	PAB 0450 0350 135					
Groove Dimension	ØA	x	ØB	x	F	
	45.00		35.00		13.50	

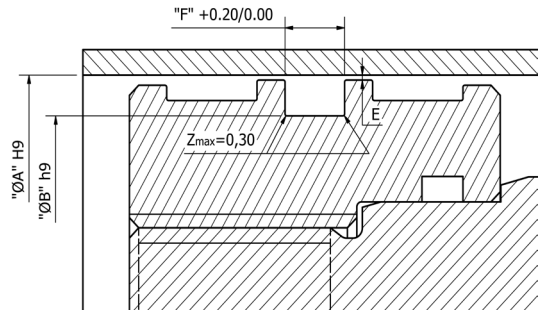

47.62

Part No	PAB 0476 0317 116					
Groove Dimension	ØA	x	ØB	x	F	
	47.62		31.75		11.60	

47.62

Part No	PAB 0476 0381 063					
Groove Dimension	ØA	x	ØB	x	F	
	47.62		38.10		6.35	

48.00

Part No	PAB 0480 0360 095					
Groove Dimension	ØA	x	ØB	x	F	
	48.00		36.00		9.50	

48.00

Part No	PAB 0480 0400 065					
Groove Dimension	ØA	x	ØB	x	F	
	48.00		40.00		6.50	

50.00

Part No	PAB 0500 0300 145					
Groove Dimension	ØA	x	ØB	x	F	
	50.00		30.00		14.50	

50.00

Part No	PAB 0500 0350 115					
Groove Dimension	ØA	x	ØB	x	F	
	50.00		35.00		11.50	

50.00

Part No	PAB 0500 0380 095					
Groove Dimension	ØA	x	ØB	x	F	
	50.00		38.00		9.50	

50.00

Part No	PAB 0500 0400 080					
Groove Dimension	ØA	x	ØB	x	F	
	50.00		40.00		8.00	

50.00

Part No	PAB 0500 0400 110					
Groove Dimension	ØA	x	ØB	x	F	
	50.00		40.00		11.00	

50.00

Part No	PAB 0500 0400 135					
Groove Dimension	ØA	x	ØB	x	F	
	50.00		40.00		13.50	

50.00

Part No	PAB 0500 0420 064					
Groove Dimension	ØA	x	ØB	x	F	
	50.00		42.00		6.40	

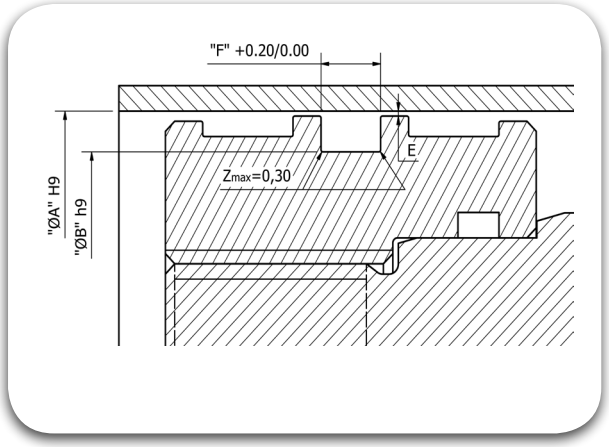

50.80

Part No	PAB 0508 0349 085				
Groove Dimension	ØA	x	ØB	x	F
	50.80		34.92		8.50

50.80

Part No	PAB 0508 0349 100				
Groove Dimension	ØA	x	ØB	x	F
	50.80		34.92		10.00

50.80

Part No	PAB 0508 0349 116				
Groove Dimension	ØA	x	ØB	x	F
	50.80		34.92		11.60

50.80

Part No	PAB 0508 0377 090				
Groove Dimension	ØA	x	ØB	x	F
	50.80		37.72		9.00

50.80

Part No	PAB 0508 0381 100				
Groove Dimension	ØA	x	ØB	x	F
	50.80		38.10		10.00

50.80

Part No	PAB 0508 0381 124				
Groove Dimension	ØA	x	ØB	x	F
	50.80		38.10		12.40

53.00

Part No	PAB 0530 0430 090				
Groove Dimension	ØA	x	ØB	x	F
	53.00		43.00		9.00

53.00

Part No	PAB 0530 0440 080				
Groove Dimension	ØA	x	ØB	x	F
	53.00		44.00		8.00

53.00

Part No	PAB 0530 0450 065				
Groove Dimension	ØA	x	ØB	x	F
	53.00		45.00		6.50

53.97

Part No	PAB 0539 0381 115				
Groove Dimension	ØA	x	ØB	x	F
	53.97		38.10		11.50

53.97

Part No	PAB 0539 0381 128				
Groove Dimension	ØA	x	ØB	x	F
	53.97		38.10		12.83

55.00

Part No	PAB 0550 0450 080				
Groove Dimension	ØA	x	ØB	x	F
	55.00		45.00		8.00

55.37

Part No	PAB 0553 0459 083				
Groove Dimension	ØA	x	ØB	x	F
	55.37		45.97		8.33

55.50

Part No	PAB 0555 0429 089				
Groove Dimension	ØA	x	ØB	x	F
	55.50		42.92		8.90

56.00

Part No	PAB 0560 0460 080				
Groove Dimension	ØA	x	ØB	x	F
	56.00		46.00		8.00

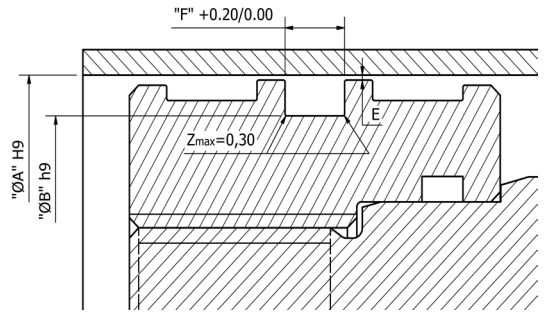

57.12

Part No	PAB 0571 0412 116				
Groove Dimension	ØA	x	ØB	x	F
	57.12		41.27		11.60

58.00

Part No	PAB 0580 0500 125				
Groove Dimension	ØA	x	ØB	x	F
	58.00		50.00		12.50

60.00

Part No	PAB 0600 0400 145				
Groove Dimension	ØA	x	ØB	x	F
	60.00		40.00		14.50

60.00

Part No	PAB 0600 0480 070				
Groove Dimension	ØA	x	ØB	x	F
	60.00		48.00		7.00

60.00

Part No	PAB 0600 0500 080				
Groove Dimension	ØA	x	ØB	x	F
	60.00		50.00		8.00

60.00

Part No	PAB 0600 0500 100				
Groove Dimension	ØA	x	ØB	x	F
	60.00		50.00		10.00

60.32

Part No	PAB 0603 0444 116				
Groove Dimension	ØA	x	ØB	x	F
	60.32		44.45		11.60

60.32

Part No	PAB 0603 0472 100				
Groove Dimension	ØA	x	ØB	x	F
	60.32		47.23		10.00

60.35

Part No	PAB 0603 0508 110				
Groove Dimension	ØA	x	ØB	x	F
	60.35		50.80		11.00

61.91

Part No	PAB 0619 0444 116				
Groove Dimension	ØA	x	ØB	x	F
	61.91		44.45		11.60

62.00

Part No	PAB 0620 0500 095				
Groove Dimension	ØA	x	ØB	x	F
	62.00		50.00		9.50

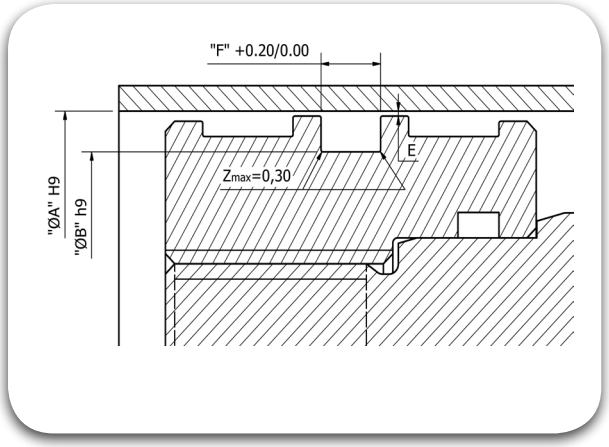

63.00

Part No	PAB 0630 0450 110					
Groove Dimension	ØA	x	ØB	x	F	
	63.00		45.00		11.00	

63.50

Part No	PAB 0635 0476 115					
Groove Dimension	ØA	x	ØB	x	F	
	63.50		47.62		11.50	

64.50

Part No	PAB 0645 0500 115					
Groove Dimension	ØA	x	ØB	x	F	
	64.50		50.00		11.50	

65.00

Part No	PAB 0650 0450 145					
Groove Dimension	ØA	x	ØB	x	F	
	65.00		45.00		14.50	

65.00

Part No	PAB 0650 0550 110					
Groove Dimension	ØA	x	ØB	x	F	
	65.00		55.00		11.00	

66.00

Part No	PAB 0660 0560 080					
Groove Dimension	ØA	x	ØB	x	F	
	66.00		56.00		8.00	

66.67

Part No	PAB 0667 0508 115					
Groove Dimension	ØA	x	ØB	x	F	
	66.67		50.80		11.50	

67.00

Part No	PAB 0670 0570 080					
Groove Dimension	ØA	x	ØB	x	F	
	67.00		57.00		8.00	

69.00

Part No	PAB 0690 0610 085					
Groove Dimension	ØA	x	ØB	x	F	
	69.00		61.00		8.50	

69.50

Part No	PAB 0695 0600 070					
Groove Dimension	ØA	x	ØB	x	F	
	69.50		60.00		7.00	

69.85

Part No	PAB 0698 0571 100					
Groove Dimension	ØA	x	ØB	x	F	
	69.85		57.15		10.00	

70.00

Part No	PAB 0700 0500 145					
Groove Dimension	ØA	x	ØB	x	F	
	70.00		50.00		14.50	

70.00

Part No	PAB 0700 0550 105					
Groove Dimension	ØA	x	ØB	x	F	
	70.00		55.00		10.50	

70.00

Part No	PAB 0700 0600 080					
Groove Dimension	ØA	x	ØB	x	F	
	70.00		60.00		8.00	

71.00

Part No	PAB 0710 0600 096					
Groove Dimension	ØA	x	ØB	x	F	
	71.00		60.00		9.60	

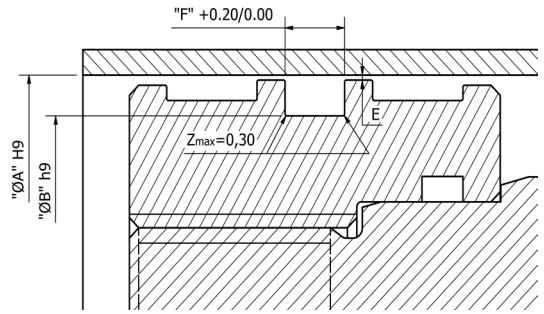

72.00

Part No	PAB 0720 0600 100					
Groove Dimension	ØA	x	ØB	x	F	
	72.00		60.00		10.00	

73.02

Part No	PAB 0730 0539 148					
Groove Dimension	ØA	x	ØB	x	F	
	73.02		53.97		14.80	

73.02

Part No	PAB 0730 0571 115					
Groove Dimension	ØA	x	ØB	x	F	
	73.02		57.15		11.50	

75.00

Part No	PAB 0750 0550 145					
Groove Dimension	ØA	x	ØB	x	F	
	75.00		55.00		14.50	

75.00

Part No	PAB 0750 0600 130					
Groove Dimension	ØA	x	ØB	x	F	
	75.00		60.00		13.00	

75.00

Part No	PAB 0750 0630 096					
Groove Dimension	ØA	x	ØB	x	F	
	75.00		63.00		9.60	

75.00

Part No	PAB 0750 0650 085					
Groove Dimension	ØA	x	ØB	x	F	
	75.00		65.00		8.50	

75.00

Part No	PAB 0750 0650 135					
Groove Dimension	ØA	x	ØB	x	F	
	75.00		65.00		13.50	

76.00

Part No	PAB 0760 0560 145					
Groove Dimension	ØA	x	ØB	x	F	
	76.00		56.00		14.50	

76.00

Part No	PAB 0760 0680 080					
Groove Dimension	ØA	x	ØB	x	F	
	76.00		68.00		8.00	

76.20

Part No	PAB 0762 0571 100					
Groove Dimension	ØA	x	ØB	x	F	
	76.20		57.15		10.00	

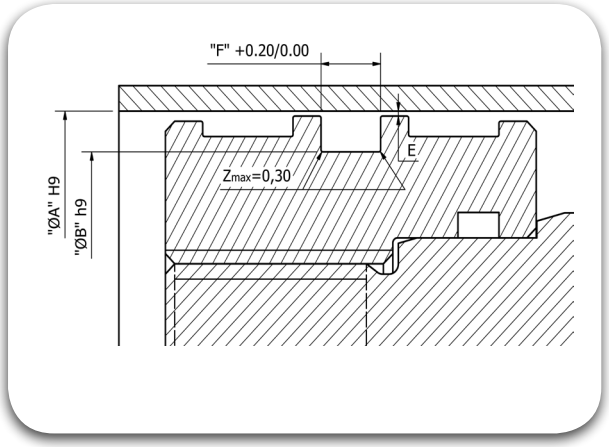

76.20

Part No	PAB 0762 0571 135				
Groove Dimension	ØA	x	ØB	x	F
	76.20		57.15		13.50

76.20

Part No	PAB 0762 0571 142				
Groove Dimension	ØA	x	ØB	x	F
	76.20		57.15		14.28

77.00

Part No	PAB 0770 0650 096				
Groove Dimension	ØA	x	ØB	x	F
	77.00		65.00		9.60

77.78

Part No	PAB 0777 0635 115				
Groove Dimension	ØA	x	ØB	x	F
	77.78		63.50		11.50

79.37

Part No	PAB 0793 0603 148				
Groove Dimension	ØA	x	ØB	x	F
	79.37		60.32		14.80

80.00

Part No	PAB 0800 0600 145				
Groove Dimension	ØA	x	ØB	x	F
	80.00		60.00		14.50

80.00

Part No	PAB 0800 0650 115				
Groove Dimension	ØA	x	ØB	x	F
	80.00		65.00		11.50

80.00

Part No	PAB 0800 0660 110				
Groove Dimension	ØA	x	ØB	x	F
	80.00		66.00		11.00

80.00

Part No	PAB 0800 0700 080				
Groove Dimension	ØA	x	ØB	x	F
	80.00		70.00		8.00

82.00

Part No	PAB 0820 0700 096				
Groove Dimension	ØA	x	ØB	x	F
	82.00		70.00		9.60

82.55

Part No	PAB 0825 0635 142				
Groove Dimension	ØA	x	ØB	x	F
	82.55		63.50		14.28

83.00

Part No	PAB 0830 0630 145				
Groove Dimension	ØA	x	ØB	x	F
	83.00		63.00		14.50

84.00

Part No	PAB 0840 0700 125				
Groove Dimension	ØA	x	ØB	x	F
	84.00		70.00		12.50

84.00

Part No	PAB 0840 0760 085					
Groove Dimension	ØA	x	ØB	x	F	
	84.00		76.00		8.50	

85.00

Part No	PAB 0850 0650 145					
Groove Dimension	ØA	x	ØB	x	F	
	85.00		65.00		14.50	

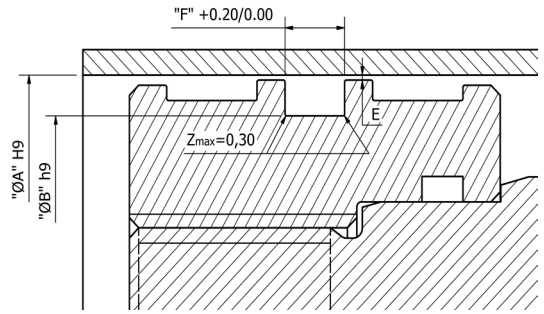

85.00

Part No	PAB 0850 0700 120					
Groove Dimension	ØA	x	ØB	x	F	
	85.00		70.00		12.00	

85.00

Part No	PAB 0850 0750 080					
Groove Dimension	ØA	x	ØB	x	F	
	85.00		75.00		8.00	

85.72

Part No	PAB 0857 0666 148					
Groove Dimension	ØA	x	ØB	x	F	
	85.72		66.67		14.80	

87.00

Part No	PAB 0870 0770 080					
Groove Dimension	ØA	x	ØB	x	F	
	87.00		77.00		8.00	

88.50

Part No	PAB 0885 0790 070					
Groove Dimension	ØA	x	ØB	x	F	
	88.50		79.00		7.00	

88.90

Part No	PAB 0889 0730 125					
Groove Dimension	ØA	x	ØB	x	F	
	88.90		73.02		12.50	

88.90

Part No	PAB 0889 0762 094					
Groove Dimension	ØA	x	ØB	x	F	
	88.90		76.20		9.40	

89.50

Part No	PAB 0895 0750 115					
Groove Dimension	ØA	x	ØB	x	F	
	89.50		75.00		11.50	

90.00

Part No	PAB 0900 0700 145					
Groove Dimension	ØA	x	ØB	x	F	
	90.00		70.00		14.50	

90.00

Part No	PAB 0900 0750 115					
Groove Dimension	ØA	x	ØB	x	F	
	90.00		75.00		11.50	

90.00

Part No	PAB 0900 0800 080					
Groove Dimension	ØA	x	ØB	x	F	
	90.00		80.00		8.00	

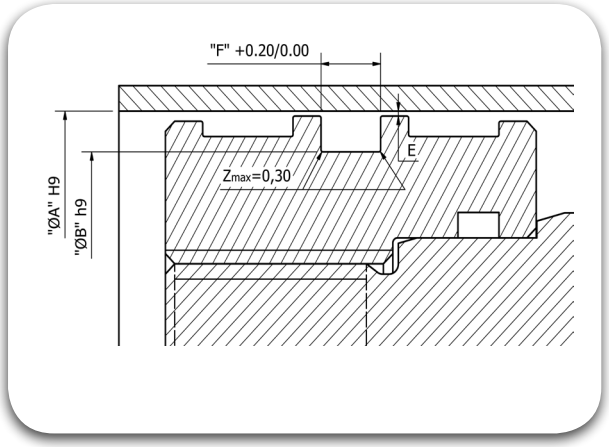

91.00

Part No	PAB 0910 0810 080				
Groove Dimension	ØA	x	ØB	x	F
	91.00		81.00		8.00

92.00

Part No	PAB 0920 0800 096				
Groove Dimension	ØA	x	ØB	x	F
	92.00		80.00		9.60

94.00

Part No	PAB 0940 0840 080				
Groove Dimension	ØA	x	ØB	x	F
	94.00		84.00		8.00

95.00

Part No	PAB 0950 0650 175				
Groove Dimension	ØA	x	ØB	x	F
	95.00		65.00		17.50

95.00

Part No	PAB 0950 0750 110				
Groove Dimension	ØA	x	ØB	x	F
	95.00		75.00		11.00

95.00

Part No	PAB 0950 0850 080				
Groove Dimension	ØA	x	ØB	x	F
	95.00		85.00		8.00

95.00

Part No	PAB 0950 0850 085				
Groove Dimension	ØA	x	ØB	x	F
	95.00		85.00		8.50

95.25

Part No	PAB 0952 0762 148				
Groove Dimension	ØA	x	ØB	x	F
	95.25		76.20		14.80

96.00

Part No	PAB 0960 0800 105				
Groove Dimension	ØA	x	ØB	x	F
	96.00		80.00		10.50

96.00

Part No	PAB 0960 0880 080				
Groove Dimension	ØA	x	ØB	x	F
	96.00		88.00		8.00

97.00

Part No	PAB 0970 0850 096				
Groove Dimension	ØA	x	ØB	x	F
	97.00		85.00		9.60

99.00

Part No	PAB 0990 0910 085				
Groove Dimension	ØA	x	ØB	x	F
	99.00		91.00		8.50

100.00

Part No	PAB 1000 0800 145				
Groove Dimension	ØA	x	ØB	x	F
	100.00		80.00		14.50

100.00

Part No	PAB 1000 0850 120					
Groove Dimension	ØA	x	ØB	x	F	
	100.00		85.00		12.00	

101.60

Part No	PAB 1016 0825 148					
Groove Dimension	ØA	x	ØB	x	F	
	101.60		82.55		14.80	

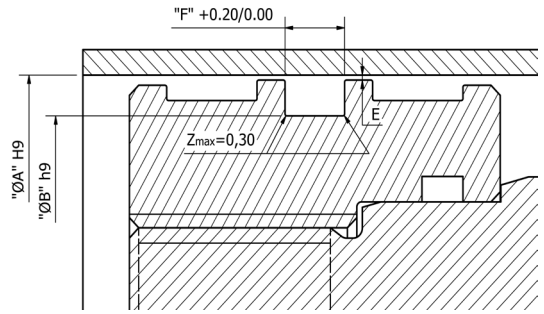

101.60

Part No	PAB 1016 0889 100					
Groove Dimension	ØA	x	ØB	x	F	
	101.60		88.90		10.00	

102.00

Part No	PAB 1020 0900 096					
Groove Dimension	ØA	x	ØB	x	F	
	102.00		90.00		9.60	

104.77

Part No	PAB 1047 0857 148					
Groove Dimension	ØA	x	ØB	x	F	
	104.77		85.72		14.80	

105.00

Part No	PAB 1050 0850 145					
Groove Dimension	ØA	x	ØB	x	F	
	105.00		85.00		14.50	

105.00

Part No	PAB 1050 0950 110					
Groove Dimension	ØA	x	ØB	x	F	
	105.00		95.00		11.00	

105.00

Part No	PAB 1050 0960 085					
Groove Dimension	ØA	x	ØB	x	F	
	105.00		96.00		8.50	

107.00

Part No	PAB 1070 0950 125					
Groove Dimension	ØA	x	ØB	x	F	
	107.00		95.00		12.50	

107.50

Part No	PAB 1075 0980 070					
Groove Dimension	ØA	x	ØB	x	F	
	107.50		98.00		7.00	

107.95

Part No	PAB 1079 0889 127					
Groove Dimension	ØA	x	ØB	x	F	
	107.95		88.90		12.70	

108.00

Part No	PAB 1080 0960 125					
Groove Dimension	ØA	x	ØB	x	F	
	108.00		96.00		12.50	

108.00

Part No	PAB 1080 0970 125					
Groove Dimension	ØA	x	ØB	x	F	
	108.00		97.00		12.50	

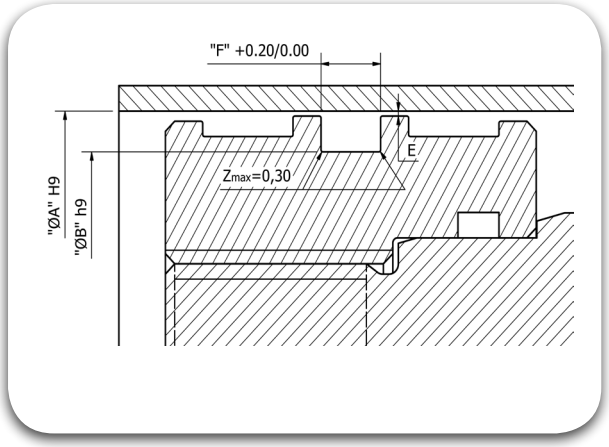

110.00

Part No	PAB 1100 0850 135					
Groove Dimension	ØA	x	ØB	x	F	
	110.00		85.00		13.50	

110.00

Part No	PAB 1100 0900 125					
Groove Dimension	ØA	x	ØB	x	F	
	110.00		90.00		12.50	

110.00

Part No	PAB 1100 0950 125					
Groove Dimension	ØA	x	ØB	x	F	
	110.00		95.00		12.50	

111.12

Part No	PAB 1111 0857 195					
Groove Dimension	ØA	x	ØB	x	F	
	111.12		85.72		19.50	

113.00

Part No	PAB 1130 1000 135					
Groove Dimension	ØA	x	ØB	x	F	
	113.00		100.00		13.50	

114.30

Part No	PAB 1143 0889 127					
Groove Dimension	ØA	x	ØB	x	F	
	114.30		88.90		12.70	

114.30

Part No	PAB 1143 0952 135					
Groove Dimension	ØA	x	ØB	x	F	
	114.30		95.25		13.50	

115.00

Part No	PAB 1150 1000 115					
Groove Dimension	ØA	x	ØB	x	F	
	115.00		100.00		11.50	

115.00

Part No	PAB 1150 1030 125					
Groove Dimension	ØA	x	ØB	x	F	
	115.00		103.00		12.50	

115.00

Part No	PAB 1150 1050 110					
Groove Dimension	ØA	x	ØB	x	F	
	115.00		105.00		11.00	

115.00

Part No	PAB 1150 1070 080					
Groove Dimension	ØA	x	ØB	x	F	
	115.00		107.00		8.00	

116.00

Part No	PAB 1160 1060 085					
Groove Dimension	ØA	x	ØB	x	F	
	116.00		106.00		8.50	

117.00

Part No	PAB 1170 1050 125					
Groove Dimension	ØA	x	ØB	x	F	
	117.00		105.00		12.50	

117.45

Part No	PAB 1174 0920 132					
Groove Dimension	ØA	x	ØB	x	F	
	117.45		92.07		13.20	

120.00

Part No	PAB 1200 1000 120					
Groove Dimension	ØA	x	ØB	x	F	
	120.00		100.00		12.00	

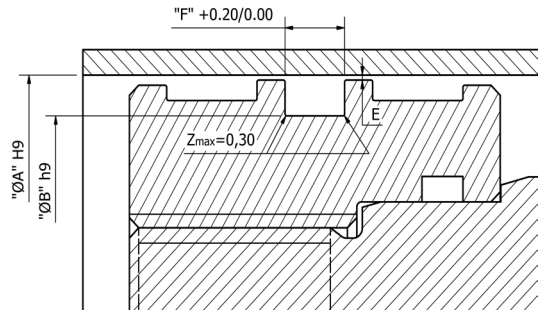

120.00

Part No	PAB 1200 1000 145					
Groove Dimension	ØA	x	ØB	x	F	
	120.00		100.00		14.50	

120.00

Part No	PAB 1200 1040 120					
Groove Dimension	ØA	x	ØB	x	F	
	120.00		104.00		12.00	

120.00

Part No	PAB 1200 1050 120					
Groove Dimension	ØA	x	ØB	x	F	
	120.00		105.00		12.00	

120.65

Part No	PAB 1206 0952 195					
Groove Dimension	ØA	x	ØB	x	F	
	120.65		95.25		19.50	

123.82

Part No	PAB 1238 1015 171					
Groove Dimension	ØA	x	ØB	x	F	
	123.82		101.50		17.18	

125.00

Part No	PAB 1250 1050 125					
Groove Dimension	ØA	x	ØB	x	F	
	125.00		105.00		12.50	

125.00

Part No	PAB 1250 1100 120					
Groove Dimension	ØA	x	ØB	x	F	
	125.00		110.00		12.00	

125.00

Part No	PAB 1250 1150 090					
Groove Dimension	ØA	x	ØB	x	F	
	125.00		115.00		9.00	

127.00

Part No	PAB 1270 1016 195					
Groove Dimension	ØA	x	ØB	x	F	
	127.00		101.60		19.50	

130.00

Part No	PAB 1300 1040 195					
Groove Dimension	ØA	x	ØB	x	F	
	130.00		104.00		19.50	

130.00

Part No	PAB 1300 1180 125					
Groove Dimension	ØA	x	ØB	x	F	
	130.00		118.00		12.50	

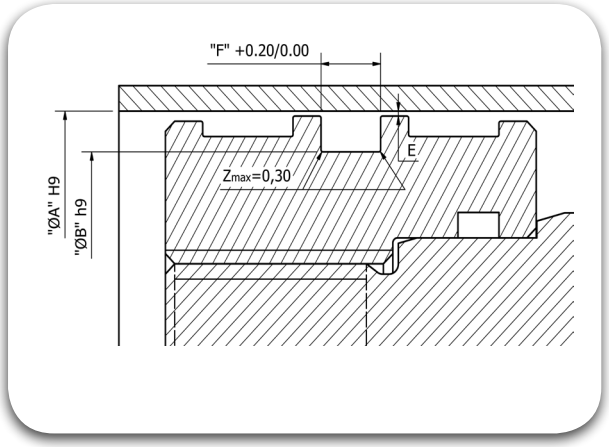

130.00

Part No	PAB 1300 1200 080				
Groove Dimension	ØA	x	ØB	x	F
	130.00		120.00		8.00

132.70

Part No	PAB 1327 1200 100				
Groove Dimension	ØA	x	ØB	x	F
	132.70		120.00		10.00

133.00

Part No	PAB 1330 1230 080				
Groove Dimension	ØA	x	ØB	x	F
	133.00		123.00		8.00

133.35

Part No	PAB 1333 1070 080				
Groove Dimension	ØA	x	ØB	x	F
	133.35		107.95		19.00

133.35

Part No	PAB 1333 1143 124				
Groove Dimension	ØA	x	ØB	x	F
	133.35		114.30		12.40

134.00

Part No	PAB 1340 1260 080				
Groove Dimension	ØA	x	ØB	x	F
	134.00		126.00		8.00

135.00

Part No	PAB 1350 1100 155				
Groove Dimension	ØA	x	ØB	x	F
	135.00		110.00		15.50

135.00

Part No	PAB 1350 1150 160				
Groove Dimension	ØA	x	ØB	x	F
	135.00		115.00		16.00

135.00

Part No	PAB 1350 1250 085				
Groove Dimension	ØA	x	ØB	x	F
	135.00		125.00		8.50

136.00

Part No	PAB 1360 1260 085				
Groove Dimension	ØA	x	ØB	x	F
	136.00		126.00		8.50

139.70

Part No	PAB 1397 1143 195				
Groove Dimension	ØA	x	ØB	x	F
	139.70		114.30		19.50

139.70

Part No	PAB 1397 1270 100				
Groove Dimension	ØA	x	ØB	x	F
	139.70		127.00		10.00

140.00

Part No	PAB 1400 1100 165				
Groove Dimension	ØA	x	ØB	x	F
	140.00		110.00		16.50

140.00

Part No	PAB 1400 1200 125					
Groove Dimension	ØA	x	ØB	x	F	
	140.00		120.00		12.50	

140.00

Part No	PAB 1400 1250 120					
Groove Dimension	ØA	x	ØB	x	F	
	140.00		125.00		12.00	

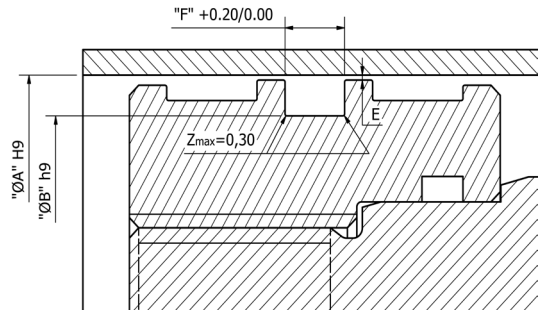

140.00

Part No	PAB 1400 1300 080					
Groove Dimension	ØA	x	ØB	x	F	
	140.00		130.00		8.00	

144.00

Part No	PAB 1440 1310 135					
Groove Dimension	ØA	x	ØB	x	F	
	144.00		131.00		13.50	

145.00

Part No	PAB 1450 1270 115					
Groove Dimension	ØA	x	ØB	x	F	
	145.00		127.00		11.50	

145.00

Part No	PAB 1450 1300 130					
Groove Dimension	ØA	x	ØB	x	F	
	145.00		130.00		13.00	

146.05

Part No	PAB 1460 1206 195					
Groove Dimension	ØA	x	ØB	x	F	
	146.05		120.65		19.50	

152.40

Part No	PAB 1524 1270 195					
Groove Dimension	ØA	x	ØB	x	F	
	152.40		127.00		19.50	

155.00

Part No	PAB 1550 1400 130					
Groove Dimension	ØA	x	ØB	x	F	
	155.00		140.00		13.00	

158.75

Part No	PAB 1587 1333 140					
Groove Dimension	ØA	x	ØB	x	F	
	158.75		133.35		14.00	

165.10

Part No	PAB 1651 1397 195					
Groove Dimension	ØA	x	ØB	x	F	
	165.10		139.70		19.50	

170.00

Part No	PAB 1700 1550 095					
Groove Dimension	ØA	x	ØB	x	F	
	170.00		155.00		9.50	

171.45

Part No	PAB 1714 1460 195					
Groove Dimension	ØA	x	ØB	x	F	
	171.45		146.05		19.50	

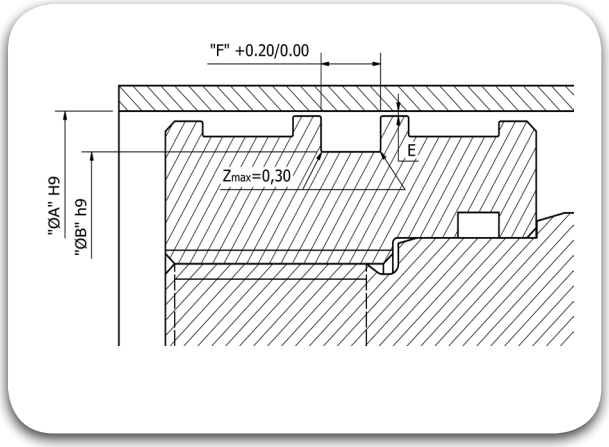

174.00

Part No	PAB 1740 1600 115					
Groove Dimension	ØA	x	ØB	x	F	
	174.00		160.00		11.50	

177.80

Part No	PAB 1778 1524 195					
Groove Dimension	ØA	x	ØB	x	F	
	177.80		152.40		19.50	

177.80

Part No	PAB 1778 1651 100					
Groove Dimension	ØA	x	ØB	x	F	
	177.80		165.10		10.00	

178.00

Part No	PAB 1780 1630 130					
Groove Dimension	ØA	x	ØB	x	F	
	178.00		163.00		13.00	

182.70

Part No	PAB 1827 1700 100					
Groove Dimension	ØA	x	ØB	x	F	
	182.70		170.00		10.00	

184.10

Part No	PAB 1841 1524 258					
Groove Dimension	ØA	x	ØB	x	F	
	184.10		152.40		25.80	

190.50

Part No	PAB 1950 1587 258					
Groove Dimension	ØA	x	ØB	x	F	
	190.50		158.75		25.80	

195.00

Part No	PAB 1950 1800 125					
Groove Dimension	ØA	x	ØB	x	F	
	195.00		180.00		12.50	

196.85

Part No	PAB 1968 1651 100					
Groove Dimension	ØA	x	ØB	x	F	
	196.85		165.10		25.80	

200.00

Part No	PAB 2000 1750 145					
Groove Dimension	ØA	x	ØB	x	F	
	200.00		175.00		14.50	

202.00

Part No	PAB 2020 1870 115					
Groove Dimension	ØA	x	ØB	x	F	
	202.00		187.00		11.50	

203.00

Part No	PAB 2030 1880 130					
Groove Dimension	ØA	x	ØB	x	F	
	203.00		188.00		13.00	

203.20

Part No	PAB 2032 1714 258					
Groove Dimension	ØA	x	ØB	x	F	
	203.20		171.45		25.80	

203.20

Part No	PAB 2032 1778 227					
Groove Dimension	ØA	x	ØB	x	F	
	203.20		177.80		22.70	

208.70

Part No	PAB 2087 1960 095					
Groove Dimension	ØA	x	ØB	x	F	
	208.70		196.00		9.50	

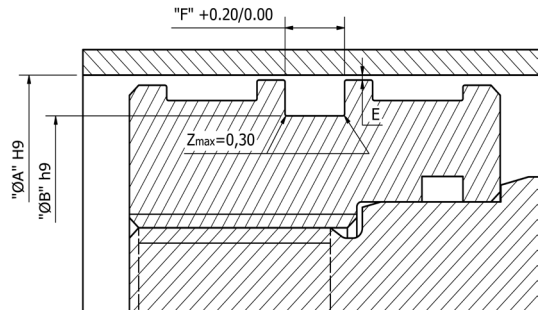

215.90

Part No	PAB 2159 1841 258					
Groove Dimension	ØA	x	ØB	x	F	
	215.90		184.15		25.80	

222.25

Part No	PAB 2222 1950 258					
Groove Dimension	ØA	x	ØB	x	F	
	222.25		190.50		25.80	

228.60

Part No	PAB 2286 1968 258					
Groove Dimension	ØA	x	ØB	x	F	
	228.60		196.85		25.80	

229.00

Part No	PAB 2290 2140 130					
Groove Dimension	ØA	x	ØB	x	F	
	229.00		214.00		13.00	

235.00

Part No	PAB 2350 2032 258					
Groove Dimension	ØA	x	ØB	x	F	
	235.00		203.20		25.80	

236.70

Part No	PAB 2367 2240 095					
Groove Dimension	ØA	x	ØB	x	F	
	236.70		224.00		9.50	

247.65

Part No	PAB 2476 2159 258					
Groove Dimension	ØA	x	ØB	x	F	
	247.65		215.90		25.80	

250.00

Part No	PAB 2500 2200 205					
Groove Dimension	ØA	x	ØB	x	F	
	250.00		220.00		20.50	

254.00

Part No	PAB 2540 2222 258					
Groove Dimension	ØA	x	ØB	x	F	
	254.00		222.25		25.80	

255.00

Part No	PAB 2550 2400 130					
Groove Dimension	ØA	x	ØB	x	F	
	255.00		240.00		13.00	

258.00

Part No	PAB 2580 2380 155					
Groove Dimension	ØA	x	ØB	x	F	
	258.00		238.00		15.50	

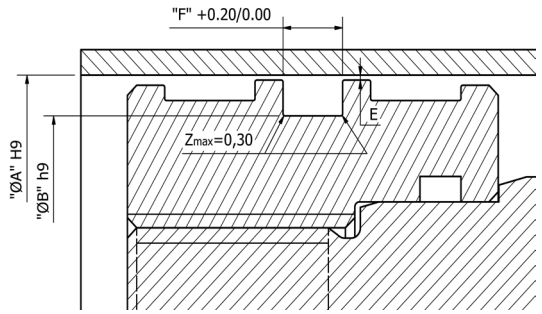

260.35

Part No	PAB 2603 2286 258					
Groove Dimension	ØA	x	ØB	x	F	
	260.35		228.60		25.80	

273.05

Part No	PAB 2730 2413 258					
Groove Dimension	ØA	x	ØB	x	F	
	273.05		241.30		25.80	

285.75

Part No	PAB 2857 2540 258					
Groove Dimension	ØA	x	ØB	x	F	
	285.75		254.00		25.80	

290.00

Part No	PAB 2900 2500 254					
Groove Dimension	ØA	x	ØB	x	F	
	290.00		250.00		25.40	

292.10

Part No	PAB 2921 2603 258					
Groove Dimension	ØA	x	ØB	x	F	
	292.10		260.35		25.80	

298.45

Part No	PAB 2984 2667 258					
Groove Dimension	ØA	x	ØB	x	F	
	298.45		266.70		25.80	

304.80

Part No	PAB 3048 2730 258					
Groove Dimension	ØA	x	ØB	x	F	
	304.80		273.05		25.80	

311.15

Part No	PAB 3111 2794 258					
Groove Dimension	ØA	x	ØB	x	F	
	311.15		279.40		25.80	

317.50

Part No	PAB 3175 2857 258					
Groove Dimension	ØA	x	ØB	x	F	
	317.50		285.75		25.80	

320.00

Part No	PAB 3200 2800 225					
Groove Dimension	ØA	x	ØB	x	F	
	320.00		280.00		22.50	

330.20

Part No	PAB 3302 2984 258					
Groove Dimension	ØA	x	ØB	x	F	
	330.20		298.45		25.80	

336.55

Part No	PAB 3365 3048 258					
Groove Dimension	ØA	x	ØB	x	F	
	336.55		304.80		25.80	

355.00

Part No	PAB 3550 3180 130					
Groove Dimension	ØA	x	ØB	x	F	
	355.00		318.00		13.00	

360.00

Part No	PAB 3600 3200 255					
Groove Dimension	ØA	x	ØB	x	F	
	360.00		320.00		25.50	

385.00

Part No	PAB 3850 3500 254					
Groove Dimension	ØA	x	ØB	x	F	
	385.00		350.00		25.40	

415.00

Part No	PAB 4150 3750 254					
Groove Dimension	ØA	x	ØB	x	F	
	415.00		375.00		25.40	

482.00

Part No	PAB 4820 4450 355					
Groove Dimension	ØA	x	ØB	x	F	
	482.00		445.00		35.50	

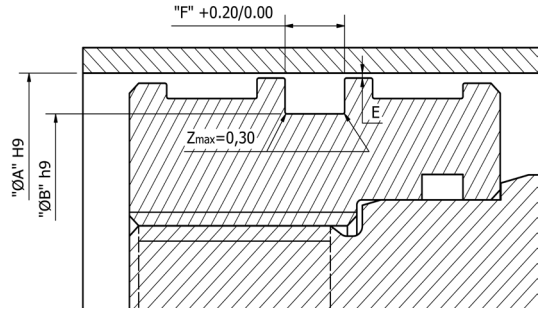

Piston Seals

PPC

TRIADA
TECHNOLOGIES

#SealingExcellence




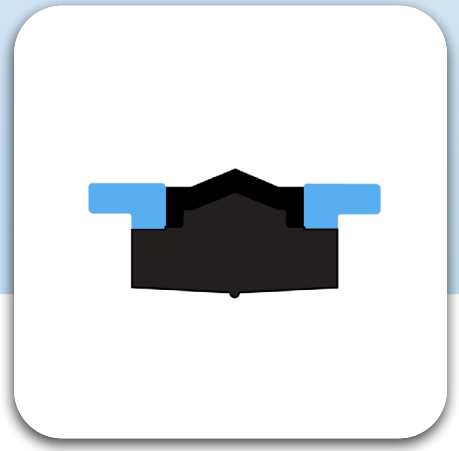

Description

The PPC Compact Seal is a double acting piston seal consists of a rugged central element in TRIAFLEX®with fabric reinforcement, performing the main sealing function and supported by two slit Wear Rings, which positions the Piston centrally within the Cylinder bore. These wear rings limits the extrusion of the TRIAFLEX® Sealing Element and takes the responsibility of the radial loads and also resists the dynamic and static friction.

Diameter Range	Ø25.00 – Ø150.00
Standard material	Sealing element TRIAFLEX® (NBR compounded with cotton fabric), Energiser are TRIAMIDE® (POM)
Temperature(°C)	-30ºC to 130ºC
Speed	≤ 0.50 m/s
Fluids	Hydraulic fluids (Mineral Oil based).
Pressure	≤ 500 bar

Reciprocating | Oscillating | Rotary | Helix | Static | Single Acting | Double Acting

Material Details

Seal Material	Seal Material Code	Wear-Ring Material
TRIAFLEX® NBR compounded with cotton fabric	CX	TRIAMIDE® Poly-Oxy Methylene

Nomenclature

Part No	PPC	1000	0845	063	T415	N
	Seal profile	Bore Dia x 10	Groove Dia x 10	Groove Width x 10	Seal Material Code	Square-Ring Material

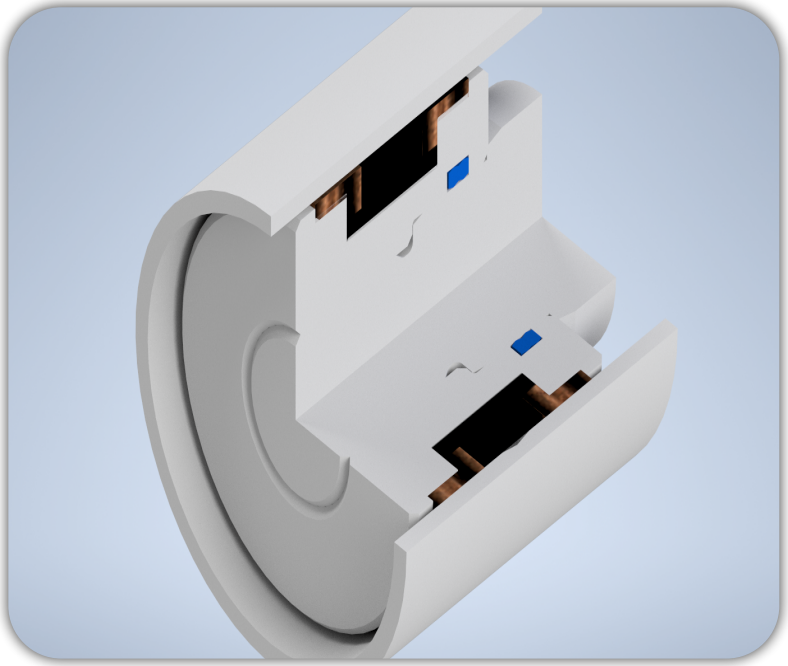

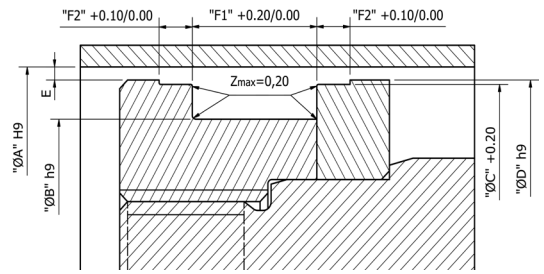

30.00

Part No	PPC 0300 0170 154					
Groove Dimension	ØA	x	ØB	x	F1	
	30.00		17.00		15.40	
	F2	x	ØC	x	ØD	
	6.35		26.50		29.00	

35.00

Part No	PPC 0350 0220 154					
Groove Dimension	ØA	x	ØB	x	F1	
	35.00		22.00		15.40	
	F2	x	ØC	x	ØD	
	6.35		31.40		33.70	

40.00

Part No	PPC 0400 2400 184					
Groove Dimension	ØA	x	ØB	x	F1	
	40.00		24.00		18.40	
	F2	x	ØC	x	ØD	
	6.35		35.40		38.70	

45.00

Part No	PPC 0450 0290 184					
Groove Dimension	ØA	x	ØB	x	F1	
	45.00		29.00		18.40	
	F2	x	ØC	x	ØD	
	6.35		40.40		43.70	

50.00

Part No	PPC 0500 0340 184					
Groove Dimension	ØA	x	ØB	x	F1	
	50.00		34.00		18.40	
	F2	x	ØC	x	ØD	
	6.35		45.40		48.70	

55.00

Part No	PPC 0550 0390 184					
Groove Dimension	ØA	x	ØB	x	F1	
	55.00		39.00		18.40	
	F2	x	ØC	x	ØD	
	6.35		50.40		53.70	

60.00

Part No	PPC 0600 0440 184					
Groove Dimension	ØA	x	ØB	x	F1	
	60.00		44.00		18.40	
	F2	x	ØC	x	ØD	
	6.35		55.40		58.70	

65.00

Part No	PPC 0650 0500 184					
Groove Dimension	ØA	x	ØB	x	F1	
	65.00		50.00		18.40	
	F2	x	ØC	x	ØD	
	6.35		60.40		63.70	

70.00

Part No	PPC 0700 0500 224					
Groove Dimension	ØA	x	ØB	x	F1	
	70.00		50.00		22.40	
	F2	x	ØC	x	ØD	
	6.35		64.20		68.30	

75.00

Part No	PPC 0750 0550 224					
Groove Dimension	ØA	x	ØB	x	F1	
	75.00		55.00		22.40	
	F2	x	ØC	x	ØD	
	6.35		69.20		73.30	

80.00

Part No	PPC 0800 0600 224					
Groove Dimension	ØA	x	ØB	x	F1	
	80.00		60.00		22.40	
	F2	x	ØC	x	ØD	
	6.35		74.20		78.30	

85.00

Part No	PPC 0850 0650 224					
Groove Dimension	ØA	x	ØB	x	F1	
	85.00		65.00		22.40	
	F2	x	ØC	x	ØD	
	6.35		79.20		83.30	

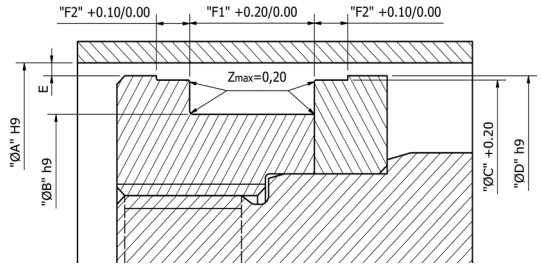

90.00

Part No	PPC 0900 0700 224					
Groove Dimension	ØA	x	ØB	x	F1	
	90.00		70.00		22.40	
	F2	x	ØC	x	ØD	
	6.35		84.15		88.30	

95.00

Part No	PPC 0950 0750 224					
Groove Dimension	ØA	x	ØB	x	F1	
	95.00		75.00		22.40	
	F2	x	ØC	x	ØD	
	6.35		89.15		93.30	

100.00

Part No	PPC 1000 0750 224					
Groove Dimension	ØA	x	ØB	x	F1	
	100.00		75.00		22.40	
	F2	x	ØC	x	ØD	
	6.35		93.15		98.05	

100.00

Part No	PPC 1000 0800 224					
Groove Dimension	ØA	x	ØB	x	F1	
	100.00		80.00		22.40	
	F2	x	ØC	x	ØD	
	6.35		94.15		98.30	

105.00

Part No	PPC 1050 0850 224					
Groove Dimension	ØA	x	ØB	x	F1	
	105.00		85.00		22.40	
	F2	x	ØC	x	ØD	
	6.35		98.10		103.00	

110.00

Part No	PPC 1100 0850 224					
Groove Dimension	ØA	x	ØB	x	F1	
	110.00		85.00		22.40	
	F2	x	ØC	x	ØD	
	6.35		103.10		108.00	

120.00

Part No	PPC 1200 1000 254					
Groove Dimension	ØA	x	ØB	x	F1	
	120.00		100.00		25.40	
	F2	x	ØC	x	ØD	
	6.35		114.10		118.00	

130.00

Part No	PPC 1300 1050 254					
Groove Dimension	ØA	x	ØB	x	F1	
	130.00		105.00		25.40	
	F2	x	ØC	x	ØD	
	6.35		123.10		128.00	

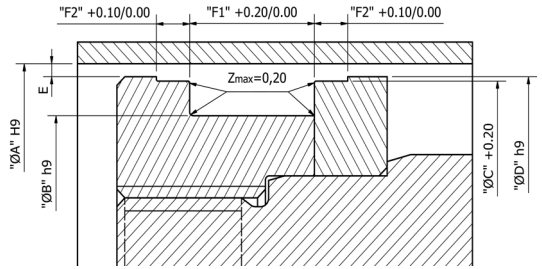

140.00

Part No	PPC 1400 1150 254					
Groove Dimension	ØA	x	ØB	x	F1	
	140.00		115.00		25.40	
	F2	x	ØC	x	ØD	
	6.35		133.00		138.00	

150.00

Part No	PPC 1500 1250 254					
Groove Dimension	ØA	x	ØB	x	F1	
	150.00		125.00		25.40	
	F2	x	ØC	x	ØD	
	6.35		143.00		148.00	

160.00

Part No	PPC 1600 1350 330					
Groove Dimension	ØA	x	ØB	x	F1	
	160.00		135.00		33.00	
	F2	x	ØC	x	ØD	
	6.35		153.00		158.00	

Piston Seals

PWS

TRIADA
TECHNOLOGIES

#SealingExcellence




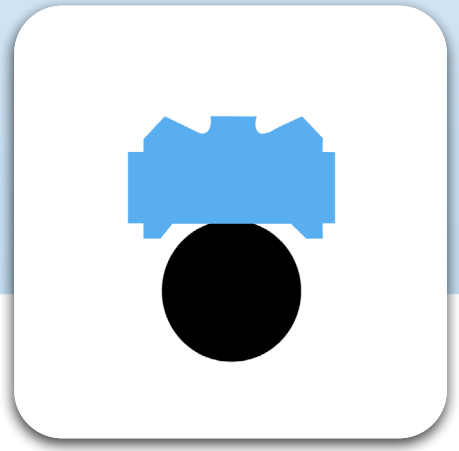

Description

The PWS is a bidirectional seal and composed of two elements. The dynamic seal is a ring in PolyUrethane (TRIATHANE®) while the static seal is an O-Ring (TRIAFLEX®) also acting as energizer. Depending on the application, media, cycle speed etc., the PolyUrethane compound is selected and the O-Ring compound is selected considering the media compatibility, temperature etc.

Diameter Range	Ø12.00 – Ø2500.00
Standard material	TRIATHANE® (PU) with Energiser in TRIAFLEX® (NBR 70 Shores) (Other Compounds available,so as to suit the Application Conditions).
Temperature(°C)	-30° C to 130° C
Speed	≤ 0.50 m/s
Fluids	Hydraulic fluids (Mineral Oil based), Water, Air etc depending on Seal Compounds selected.
Pressure	≤ 400 bar

Reciprocating · Oscillating · Rotary · Helix · Static · Single Acting · Double Acting

Material Details

Seal Material	Seal Material Code	O-Ring Material	O-Ring Material code
TRIATHANE® PU	T479	TRIAFLEX® NBR 70 Shore	N

Nomenclature

Part No	PWS	1000	0845	063	T479	N
	Seal profile	Bore Dia x 10	Groove Dia x 10	Groove Width x 10	Seal Material Code	O-Ring Material Code

Groove Details

Bore Diameter "A" H9	Radial Clearance "E" max			
Standard Range	<20 bar	<100 bar	<200 bar	<400 bar
6.00 - 13.90	0.20	0.10	0.08	0.05
14.00 - 24.90	0.25	0.15	0.10	0.07
25.00 - 45.90	0.35	0.20	0.15	0.08
46.00 - 124.90	0.50	0.25	0.20	0.10
125.00 - 999.90	0.60	0.30	0.25	0.12
1000.00 - 2700.00	0.90	0.50	0.40	0.20

Groove Details

Groove Width	Radius "Z"
0.00 - 2.20	0.40
2.30 - 3.20	0.60
3.30 - 4.20	1.00
4.30 - 6.30	1.30
6.40 - 8.10	1.80

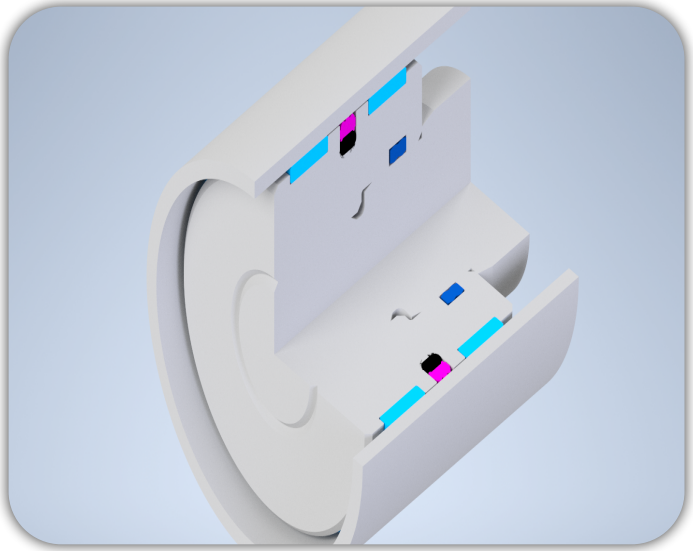

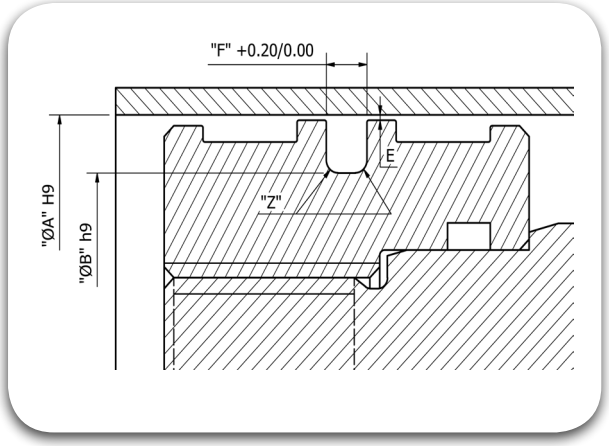

12.00

Part No	PWS 0120 0071 022						
Groove Dimension	ØA	x	ØB	x	F		
	12.00		7.10		2.20		
O-Ring Size	ID	7.65	x	C/S	1.78		

12.00

Part No	PWS 0120 0045 032						
Groove Dimension	ØA	x	ØB	x	F		
	12.00		4.50		3.20		
O-Ring Size	ID	4.42	x	C/S	2.62		

15.00

Part No	PWS 0150 0075 032						
Groove Dimension	ØA	x	ØB	x	F		
	15.00		7.50		3.20		
O-Ring Size	ID	7.59	x	C/S	2.62		

16.00

Part No	PWS 0160 0085 032						
Groove Dimension	ØA	x	ØB	x	F		
	16.00		8.50		3.20		
O-Ring Size	ID	7.59	x	C/S	2.62		

20.00

Part No	PWS 0200 0125 032						
Groove Dimension	ØA	x	ØB	x	F		
	20.00		12.50		3.20		
O-Ring Size	ID	12.37	x	C/S	2.62		

22.00

Part No	PWS 0220 0145 032						
Groove Dimension	ØA	x	ØB	x	F		
	22.00		14.50		3.20		
O-Ring Size	ID	13.94	x	C/S	2.62		

24.00

Part No	PWS 0240 0165 032						
Groove Dimension	ØA	x	ØB	x	F		
	24.00		16.50		3.20		
O-Ring Size	ID	15.54	x	C/S	2.62		

25.00

Part No	PWS 0250 0175 032						
Groove Dimension	ØA	x	ØB	x	F		
	25.00		17.50		3.20		
O-Ring Size	ID	17.12	x	C/S	2.62		

25.00

Part No	PWS 0250 0140 042						
Groove Dimension	ØA	x	ØB	x	F		
	25.00		14.00		4.20		
O-Ring Size	ID	13.87	x	C/S	3.53		

28.00

Part No	PWS 0280 0205 032						
Groove Dimension	ØA	x	ØB	x	F		
	28.00		20.50		3.20		
O-Ring Size	ID	20.29	x	C/S	2.62		

30.00

Part No	PWS 0300 0225 032						
Groove Dimension	ØA	x	ØB	x	F		
	30.00		22.50		3.20		
O-Ring Size	ID	21.89	x	C/S	2.62		

32.00

Part No	PWS 0320 0245 032						
Groove Dimension	ØA	x	ØB	x	F		
	32.00		24.50		3.20		
O-Ring Size	ID	23.47	x	C/S	2.62		

32.00

Part No	PWS 0320 0210 042						
Groove Dimension	ØA	x	ØB	x	F		
	32.00		21.00		4.20		
O-Ring Size	ID	20.22	x	C/S	3.53		

34.00

Part No	PWS 0340 0265 032
Groove Dimension	ØA 34.00 x ØB 26.50 x F 3.20
O-Ring Size	ID 26.64 x C/S 2.26

35.00

Part No	PWS 0350 0275 032
Groove Dimension	ØA 35.00 x ØB 27.50 x F 3.20
O-Ring Size	ID 26.64 x C/S 2.26

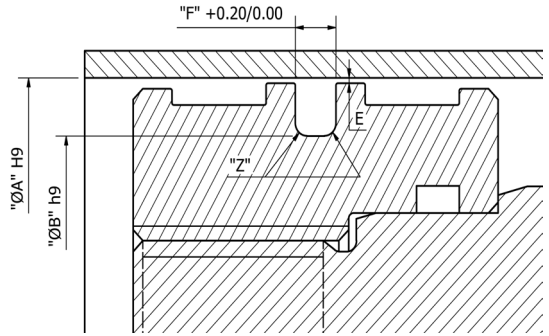

35.00

Part No	PWS 0350 0240 042
Groove Dimension	ØA 35.00 x ØB 24.00 x F 4.20
O-Ring Size	ID 23.39 x C/S 3.53

36.00

Part No	PWS 0360 0285 032
Groove Dimension	ØA 36.00 x ØB 28.50 x F 3.20
O-Ring Size	ID 28.24 x C/S 2.62

36.00

Part No	PWS 0360 0250 042
Groove Dimension	ØA 36.00 x ØB 25.00 x F 4.20
O-Ring Size	ID 24.99 x C/S 3.53

38.00

Part No	PWS 0380 0305 032
Groove Dimension	ØA 38.00 x ØB 30.50 x F 3.20
O-Ring Size	ID 29.82 x C/S 2.62

40.00

Part No	PWS 0400 0290 042
Groove Dimension	ØA 40.00 x ØB 29.00 x F 4.20
O-Ring Size	ID 28.17 x C/S 3.53

40.00

Part No	PWS 0400 0245 063
Groove Dimension	ØA 40.00 x ØB 24.50 x F 6.30
O-Ring Size	ID 23.16 x C/S 5.33

42.00

Part No	PWS 0420 0310 042
Groove Dimension	ØA 42.00 x ØB 31.00 x F 4.20
O-Ring Size	ID 29.74 x C/S 3.53

45.00

Part No	PWS 0450 0295 063
Groove Dimension	ØA 45.00 x ØB 29.50 x F 6.30
O-Ring Size	ID 29.51 x C/S 5.33

45.00

Part No	PWS 0450 0340 042
Groove Dimension	ØA 45.00 x ØB 34.00 x F 4.20
O-Ring Size	ID 32.92 x C/S 3.53

48.00

Part No	PWS 0480 0370 042
Groove Dimension	ØA 48.00 x ØB 37.00 x F 4.20
O-Ring Size	ID 36.09 x C/S 3.53

49.00

Part No	PWS 0490 0380 042
Groove Dimension	ØA 49.00 x ØB 38.00 x F 4.20
O-Ring Size	ID 37.69 x C/S 3.53

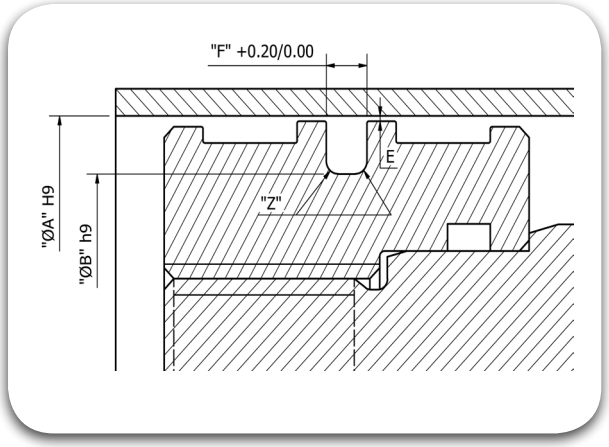

50.00

Part No	PWS 0500 0345 063				
Groove Dimension	ØA	x	ØB	x	F
	50.00		34.50		6.30
O-Ring Size	ID	34.29	x	C/S	5.33

50.00

Part No	PWS 0500 0390 042				
Groove Dimension	ØA	x	ØB	x	F
	50.00		39.00		4.20
O-Ring Size	ID	37.69	x	C/S	3.53

50.80

Part No	PWS 0508 0398 042				
Groove Dimension	ØA	x	ØB	x	F
	50.80		39.80		4.20
O-Ring Size	ID	39.70	x	C/S	3.53

52.00

Part No	PWS 0520 0365 063				
Groove Dimension	ØA	x	ØB	x	F
	52.00		36.50		6.30
O-Ring Size	ID	34.29	x	C/S	5.33

54.00

Part No	PWS 0540 0430 042				
Groove Dimension	ØA	x	ØB	x	F
	54.00		43.00		4.20
O-Ring Size	ID	42.86	x	C/S	3.53

55.00

Part No	PWS 0550 0440 042				
Groove Dimension	ØA	x	ØB	x	F
	55.00		44.00		4.20
O-Ring Size	ID	44.04	x	C/S	3.53

55.00

Part No	PWS 0550 0395 063				
Groove Dimension	ØA	x	ØB	x	F
	55.00		39.50		6.30
O-Ring Size	ID	37.47	x	C/S	5.33

56.00

Part No	PWS 0560 0450 042				
Groove Dimension	ØA	x	ØB	x	F
	56.00		45.00		4.20
O-Ring Size	ID	44.45	x	C/S	3.53

57.00

Part No	PWS 0570 0460 042				
Groove Dimension	ØA	x	ØB	x	F
	57.00		46.00		4.20
O-Ring Size	ID	46.04	x	C/S	3.53

60.00

Part No	PWS 0600 0445 063				
Groove Dimension	ØA	x	ØB	x	F
	60.00		44.50		6.30
O-Ring Size	ID	43.82	x	C/S	5.33

60.00

Part No	PWS 0600 0490 042				
Groove Dimension	ØA	x	ØB	x	F
	60.00		49.00		4.20
O-Ring Size	ID	47.22	x	C/S	3.53

63.00

Part No	PWS 0630 0520 042				
Groove Dimension	ØA	x	ØB	x	F
	63.00		52.00		4.20
O-Ring Size	ID	50.39	x	C/S	3.53

63.00

Part No	PWS 0630 0475 063				
Groove Dimension	ØA	x	ØB	x	F
	63.00		47.50		6.30
O-Ring Size	ID	46.99	x	C/S	5.33

63.50

Part No	PWS 0635 0525 042
Groove Dimension	ØA 63.50 x ØB 52.50 x F 4.20
O-Ring Size	ID 50.39 x C/S 3.53

65.00

Part No	PWS 0650 0540 042
Groove Dimension	ØA 65.00 x ØB 54.00 x F 4.20
O-Ring Size	ID 53.57 x C/S 3.53

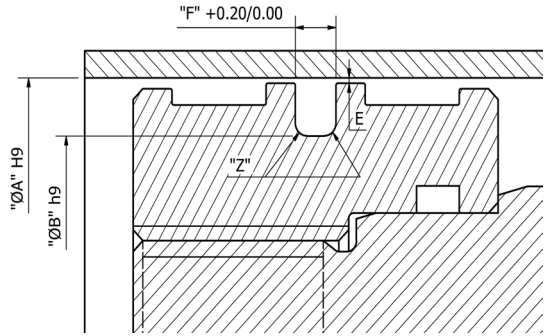

65.00

Part No	PWS 0650 0490 063
Groove Dimension	ØA 65.00 x ØB 49.00 x F 6.30
O-Ring Size	ID 46.99 x C/S 5.33

70.00

Part No	PWS 0700 0590 042
Groove Dimension	ØA 70.00 x ØB 59.00 x F 4.20
O-Ring Size	ID 58.74 x C/S 3.53

70.00

Part No	PWS 0700 0545 063
Groove Dimension	ØA 70.00 x ØB 54.50 x F 6.30
O-Ring Size	ID 53.34 x C/S 5.33

72.00

Part No	PWS 0720 0610 042
Groove Dimension	ØA 72.00 x ØB 61.00 x F 4.20
O-Ring Size	ID 60.32 x C/S 3.53

74.00

Part No	PWS 0740 0585 063
Groove Dimension	ØA 74.00 x ØB 58.50 x F 6.30
O-Ring Size	ID 56.52 x C/S 5.33

75.00

Part No	PWS 0750 0640 042
Groove Dimension	ØA 75.00 x ØB 64.00 x F 4.20
O-Ring Size	ID 63.09 x C/S 3.53

75.00

Part No	PWS 0750 0595 063
Groove Dimension	ØA 75.00 x ØB 59.50 x F 6.30
O-Ring Size	ID 59.69 x C/S 5.33

76.20

Part No	PWS 0762 0652 042
Groove Dimension	ØA 76.20 x ØB 65.20 x F 4.20
O-Ring Size	ID 63.09 x C/S 3.53

80.00

Part No	PWS 0800 0690 042
Groove Dimension	ØA 80.00 x ØB 69.00 x F 4.20
O-Ring Size	ID 68.26 x C/S 3.53

80.00

Part No	PWS 0800 0645 063
Groove Dimension	ØA 80.00 x ØB 64.50 x F 6.30
O-Ring Size	ID 62.87 x C/S 5.33

82.55

Part No	PWS 0825 0675 063
Groove Dimension	ØA 82.55 x ØB 67.50 x F 6.30
O-Ring Size	ID 66.04 x C/S 5.33

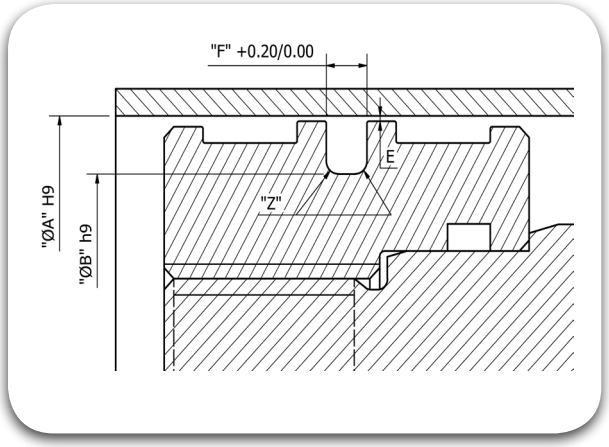

85.00

Part No	PWS 0850 0695 063					
Groove Dimension	ØA	x	ØB	x	F	
	85.00		69.50		6.30	
O-Ring Size	ID	69.22	x	C/S	5.33	

88.90

Part No	PWS 0889 0734 063					
Groove Dimension	ØA	x	ØB	x	F	
	88.90		73.40		6.30	
O-Ring Size	ID	72.39	x	C/S	5.33	

90.00

Part No	PWS 0900 0745 063					
Groove Dimension	ØA	x	ØB	x	F	
	90.00		74.50		6.30	
O-Ring Size	ID	72.39	x	C/S	5.33	

95.00

Part No	PWS 0950 0795 063					
Groove Dimension	ØA	x	ØB	x	F	
	95.00		79.50		6.30	
O-Ring Size	ID	78.74	x	C/S	5.33	

100.00

Part No	PWS 1000 0845 063					
Groove Dimension	ØA	x	ØB	x	F	
	100.00		84.50		6.30	
O-Ring Size	ID	81.92	x	C/S	5.33	

101.60

Part No	PWS 1016 0861 063					
Groove Dimension	ØA	x	ØB	x	F	
	101.60		86.10		6.30	
O-Ring Size	ID	85.09	x	C/S	5.33	

105.00

Part No	PWS 1050 0895 063					
Groove Dimension	ØA	x	ØB	x	F	
	105.00		89.50		6.30	
O-Ring Size	ID	88.27	x	C/S	5.33	

110.00

Part No	PWS 1100 0945 063					
Groove Dimension	ØA	x	ØB	x	F	
	110.00		94.50		6.30	
O-Ring Size	ID	94.62	x	C/S	5.33	

115.00

Part No	PWS 1150 0995 063					
Groove Dimension	ØA	x	ØB	x	F	
	115.00		99.50		6.30	
O-Ring Size	ID	97.79	x	C/S	5.33	

115.00

Part No	PWS 1150 0940 081					
Groove Dimension	ØA	x	ØB	x	F	
	115.00		94.00		8.10	
O-Ring Size	ID	94.00	x	C/S	7.00	

118.00

Part No	PWS 1180 1025 063					
Groove Dimension	ØA	x	ØB	x	F	
	118.00		102.50		6.30	
O-Ring Size	ID	100.97	x	C/S	5.33	

120.00

Part No	PWS 1200 1045 063					
Groove Dimension	ØA	x	ØB	x	F	
	120.00		104.50		6.30	
O-Ring Size	ID	104.14	x	C/S	5.33	

125.00

Part No	PWS 1250 1095 063					
Groove Dimension	ØA	x	ØB	x	F	
	125.00		109.50		6.30	
O-Ring Size	ID	107.32	x	C/S	5.33	

125.00

Part No	PWS 1250 1040 081					
Groove Dimension	ØA	x	ØB	x	F	
	125.00		104.00		8.10	
O-Ring Size	ID	101.00	x	C/S	7.00	

127.00

Part No	PWS 1270 1115 063					
Groove Dimension	ØA	x	ØB	x	F	
	127.00		111.50		6.30	
O-Ring Size	ID	110.49	x	C/S	5.33	

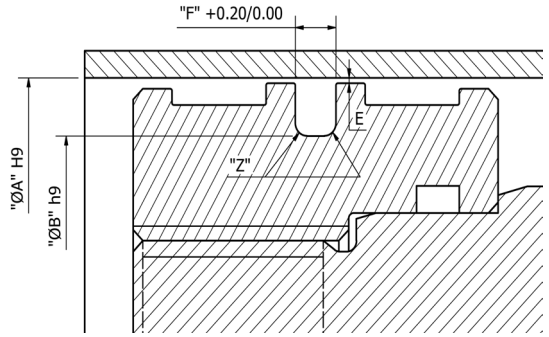

130.00

Part No	PWS 1300 1145 063					
Groove Dimension	ØA	x	ØB	x	F	
	130.00		114.50		6.30	
O-Ring Size	ID	113.67	x	C/S	5.33	

130.00

Part No	PWS 1300 1090 081					
Groove Dimension	ØA	x	ØB	x	F	
	130.00		109.00		8.10	
O-Ring Size	ID	106.00	x	C/S	7.00	

135.00

Part No	PWS 1350 1195 063					
Groove Dimension	ØA	x	ØB	x	F	
	135.00		119.50		6.30	
O-Ring Size	ID	120.02	x	C/S	5.33	

135.00

Part No	PWS 1350 1140 081					
Groove Dimension	ØA	x	ØB	x	F	
	135.00		114.00		8.10	
O-Ring Size	ID	113.67	x	C/S	7.00	

140.00

Part No	PWS 1400 1190 081					
Groove Dimension	ØA	x	ØB	x	F	
	140.00		119.00		8.10	
O-Ring Size	ID	116.84	x	C/S	7.00	

145.00

Part No	PWS 1450 1240 081					
Groove Dimension	ØA	x	ØB	x	F	
	145.00		124.00		8.10	
O-Ring Size	ID	123.19	x	C/S	7.00	

150.00

Part No	PWS 1500 1290 081					
Groove Dimension	ØA	x	ØB	x	F	
	150.00		129.00		8.10	
O-Ring Size	ID	129.54	x	C/S	7.00	

152.40

Part No	PWS 1524 1314 081					
Groove Dimension	ØA	x	ØB	x	F	
	152.40		131.40		8.10	
O-Ring Size	ID	129.54	x	C/S	7.00	

160.00

Part No	PWS 1600 1390 081					
Groove Dimension	ØA	x	ØB	x	F	
	160.00		139.00		8.10	
O-Ring Size	ID	139.07	x	C/S	7.00	

170.00

Part No	PWS 1700 1490 081					
Groove Dimension	ØA	x	ØB	x	F	
	170.00		149.00		8.10	
O-Ring Size	ID	148.59	x	C/S	7.00	

177.80

Part No	PWS 1778 1568 081					
Groove Dimension	ØA	x	ØB	x	F	
	177.80		156.80		8.10	
O-Ring Size	ID	155.60	x	C/S	7.00	

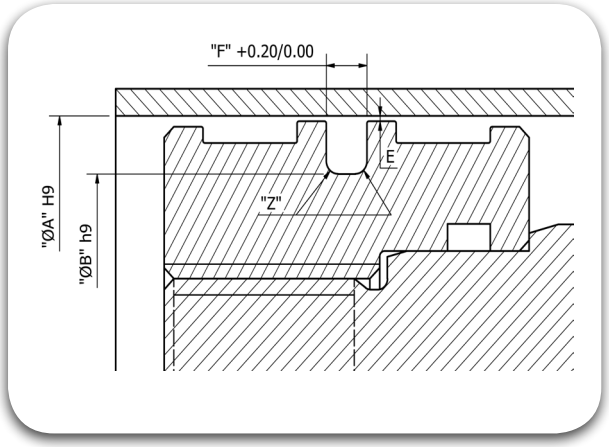

180.00

Part No	PWS 1800 1590 081				
Groove Dimension	ØA	x	ØB	x	F
	180.00		159.00		8.10
O-Ring Size	ID 158.12	x	C/S 7.00		

185.00

Part No	PWS 1850 1640 081				
Groove Dimension	ØA	x	ØB	x	F
	185.00		164.00		8.10
O-Ring Size	ID 183.52	x	C/S 7.00		

190.00

Part No	PWS 1900 1690 081				
Groove Dimension	ØA	x	ØB	x	F
	190.00		169.00		8.10
O-Ring Size	ID 164.47	x	C/S 7.00		

200.00

Part No	PWS 2000 1790 081				
Groove Dimension	ØA	x	ØB	x	F
	200.00		179.00		8.10
O-Ring Size	ID 177.17	x	C/S 7.00		

203.20

Part No	PWS 2032 1822 081				
Groove Dimension	ØA	x	ØB	x	F
	203.20		182.20		8.10
O-Ring Size	ID 181.00	x	C/S 7.00		

210.00

Part No	PWS 2100 1890 081				
Groove Dimension	ØA	x	ØB	x	F
	210.00		189.00		8.10
O-Ring Size	ID 189.87	x	C/S 7.00		

220.00

Part No	PWS 2200 1990 081				
Groove Dimension	ØA	x	ØB	x	F
	220.00		199.00		8.10
O-Ring Size	ID 196.22	x	C/S 7.00		

230.00

Part No	PWS 2300 2090 081				
Groove Dimension	ØA	x	ØB	x	F
	230.00		209.00		8.10
O-Ring Size	ID 202.57	x	C/S 7.00		

240.00

Part No	PWS 2400 2190 081				
Groove Dimension	ØA	x	ØB	x	F
	240.00		219.00		8.10
O-Ring Size	ID 215.27	x	C/S 7.00		

250.00

Part No	PWS 2500 2290 081				
Groove Dimension	ØA	x	ØB	x	F
	250.00		229.00		8.10
O-Ring Size	ID 227.97	x	C/S 7.00		

300.00

Part No	PWS 3000 2790 081				
Groove Dimension	ØA	x	ØB	x	F
	300.00		279.00		8.10
O-Ring Size	ID 278.77	x	C/S 7.00		

Piston Seals

PTS

TRIADA
TECHNOLOGIES

#SealingExcellence


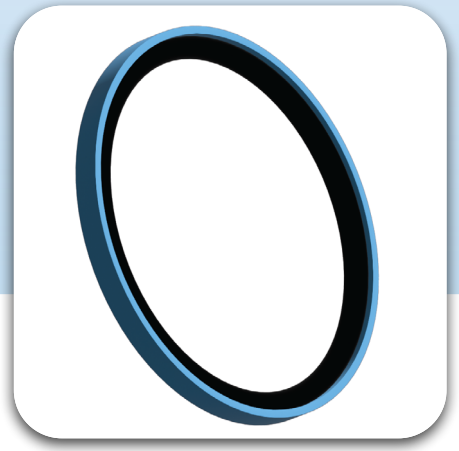

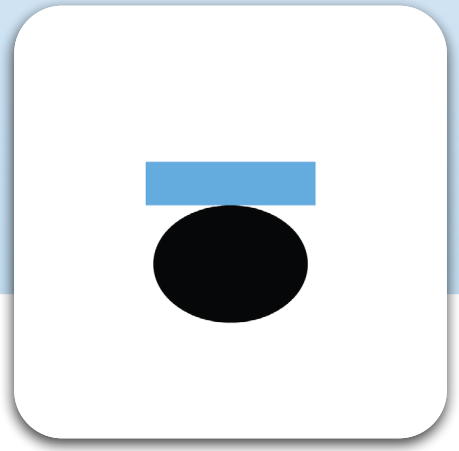

Description

The PTS Seal is a bidirectional seal and composed of two elements. The dynamic seal is a ring in filled PTFE (TRIALON®) while the static seal is an O-Ring (TRIAFLEX®) also acting as energizer. Depending on the application, media, cycle speed etc., the PTFE compound is selected and the O-Ring compound is selected considering the media compatibility, temperature etc. PTS is particularly suitable for double acting pneumatic piston e.g. in control cylinders, servo assisted equipment and in quick acting cylinders

Diameter Range	Ø7.00 – Ø1000.00
Standard material	Bronze-filled PTFE (TRIALON® 415) is the standard compound for the Sealing Element with the Energizer in NBR (Nitrile Butadiene Rubber) 70Shore A.
Temperature(°C)	- 30°C to 130°C
Speed	< 15.00 m/s
Fluids	Hydraulic fluids (Mineral Oil based), Water, Air etc depending on Seal Compounds selected.
Pressure	< 350 bar

Reciprocating · Oscillating · Rotary · Helix · Static · Single Acting · Double Acting

Material Details

Seal Material	Seal Material Code	O-Ring Material	O-Ring Material / Code
TRIALON® Bronze Filled PTFE	T415	TRIAFLEX® NBR 70	N (T571)
TRIALON® Carbon Filled PTFE	T417	TRIAFLEX® FKM 75	F (T675)

Nomenclature

Part No	PTS	1000	0015	056	T415	N
	Seal profile	Bore Dia x 10	Groove Dia x 10	Groove Width x 10	Seal Material Code	O-Ring Material Code

Groove Details

Bore Diameter "A" H9	Radius	Radial Clearance "E" max			
Standard Range	"Z" max	<20 bar	<100 bar	<200 bar	<400 bar
5.00 - 13.90	0.40	0.10	0.10	0.08	0.05
14.00 - 24.90	0.40	0.15	0.15	0.10	0.07
25.00 - 45.90	0.60	0.25	0.20	0.15	0.08
46.00 - 124.90	0.80	0.35	0.25	0.20	0.10
125.00 - 1000.00	1.00	0.60	0.40	0.30	0.20

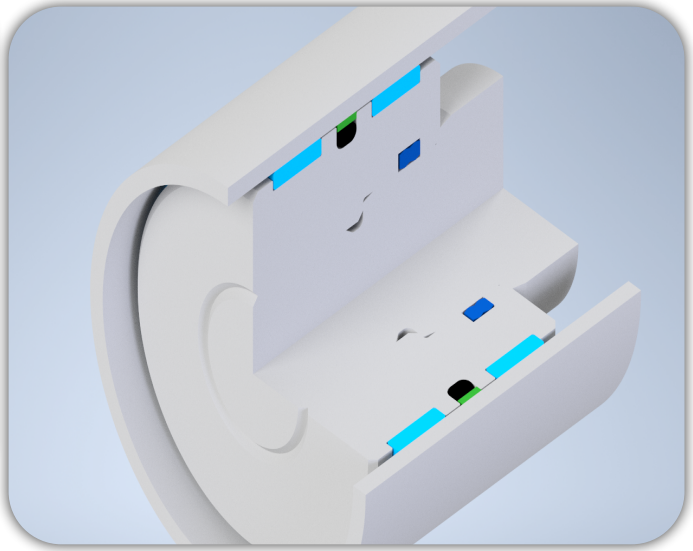

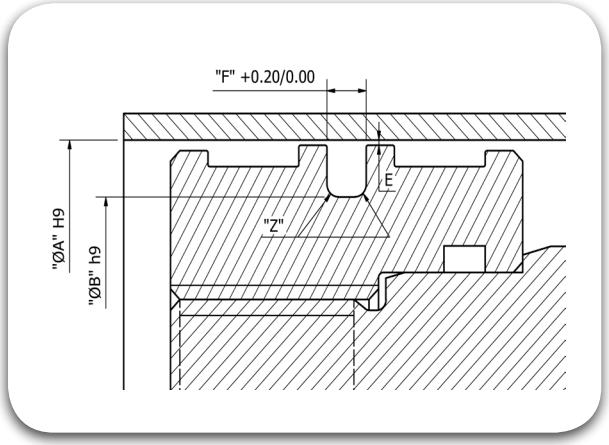

7.00

Part No	PTS 0070 0030 020		
Groove Dimension	ØA 7.00	ØB 3.00	F 2.00
O-Ring Size	ID 2.90	C/S 1.78	

8.00

Part No	PTS 0080 0040 020		
Groove Dimension	ØA 8.00	ØB 4.00	F 2.00
O-Ring Size	ID 3.58	C/S 1.78	

9.00

Part No	PTS 0090 0050 020		
Groove Dimension	ØA 9.00	ØB 5.00	F 2.00
O-Ring Size	ID 4.47	C/S 1.78	

10.00

Part No	PTS 0100 0060 020		
Groove Dimension	ØA 10.00	ØB 6.00	F 2.00
O-Ring Size	ID 6.07	C/S 1.78	

11.00

Part No	PTS 0110 0070 020		
Groove Dimension	ØA 11.00	ØB 7.00	F 2.00
O-Ring Size	ID 6.07	C/S 1.78	

12.00

Part No	PTS 0120 0080 020		
Groove Dimension	ØA 12.00	ØB 8.00	F 2.00
O-Ring Size	ID 7.65	C/S 1.78	

14.00

Part No	PTS 0140 0100 020		
Groove Dimension	ØA 14.00	ØB 10.00	F 2.00
O-Ring Size	ID 9.25	C/S 1.78	

16.00

Part No	PTS 0160 0100 028		
Groove Dimension	ØA 16.00	ØB 10.00	F 2.85
O-Ring Size	ID 9.19	C/S 2.62	

18.00

Part No	PTS 0180 0120 028		
Groove Dimension	ØA 18.00	ØB 12.00	F 2.85
O-Ring Size	ID 12.37	C/S 2.62	

19.00

Part No	PTS 0190 0130 028		
Groove Dimension	ØA 19.00	ØB 13.00	F 2.85
O-Ring Size	ID 12.37	C/S 2.62	

20.00

Part No	PTS 0200 0140 028		
Groove Dimension	ØA 20.00	ØB 14.00	F 2.85
O-Ring Size	ID 13.94	C/S 2.62	

22.00

Part No	PTS 0220 0160 028		
Groove Dimension	ØA 22.00	ØB 16.00	F 2.85
O-Ring Size	ID 15.54	C/S 2.62	

25.00

Part No	PTS 0250 0190 028		
Groove Dimension	ØA 25.00	ØB 19.00	F 2.85
O-Ring Size	ID 18.72	C/S 2.62	

28.00

Part No	PTS 0280 0205 038				
Groove Dimension	ØA	x	ØB	x	F
	28.00		20.50		3.80
O-Ring Size	ID	20.22	x	C/S	3.53

30.00

Part No	PTS 0300 0225 038				
Groove Dimension	ØA	x	ØB	x	F
	30.00		22.50		3.80
O-Ring Size	ID	21.82	x	C/S	3.53

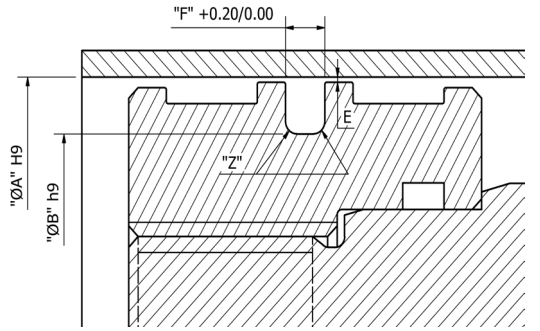

32.00

Part No	PTS 0320 0245 038				
Groove Dimension	ØA	x	ØB	x	F
	32.00		24.50		3.80
O-Ring Size	ID	24.99	x	C/S	3.53

35.00

Part No	PTS 0350 0275 038				
Groove Dimension	ØA	x	ØB	x	F
	35.00		27.50		3.80
O-Ring Size	ID	26.57	x	C/S	3.53

36.00

Part No	PTS 0360 0285 038				
Groove Dimension	ØA	x	ØB	x	F
	36.00		28.50		3.80
O-Ring Size	ID	28.17	x	C/S	3.53

38.00

Part No	PTS 0380 0305 038				
Groove Dimension	ØA	x	ØB	x	F
	38.00		30.50		3.80
O-Ring Size	ID	29.74	x	C/S	3.53

40.00

Part No	PTS 0400 0325 038				
Groove Dimension	ØA	x	ØB	x	F
	40.00		32.50		3.80
O-Ring Size	ID	32.92	x	C/S	3.53

42.00

Part No	PTS 0420 0345 038				
Groove Dimension	ØA	x	ØB	x	F
	42.00		34.50		3.80
O-Ring Size	ID	34.52	x	C/S	3.53

45.00

Part No	PTS 0450 0375 038				
Groove Dimension	ØA	x	ØB	x	F
	45.00		37.50		3.80
O-Ring Size	ID	37.69	x	C/S	3.53

48.00

Part No	PTS 0480 0405 038				
Groove Dimension	ØA	x	ØB	x	F
	48.00		40.50		3.80
O-Ring Size	ID	40.87	x	C/S	3.53

50.00

Part No	PTS 0500 0375 056				
Groove Dimension	ØA	x	ØB	x	F
	50.00		37.50		5.60
O-Ring Size	ID	37.47	x	C/S	X5.33

55.00

Part No	PTS 0550 0425 056				
Groove Dimension	ØA	x	ØB	x	F
	55.00		42.50		5.60
O-Ring Size	ID	40.64	x	C/S	5.33

60.00

Part No	PTS 0600 0475 056				
Groove Dimension	ØA	x	ØB	x	F
	60.00		47.50		5.60
O-Ring Size	ID	46.99	x	C/S	5.33

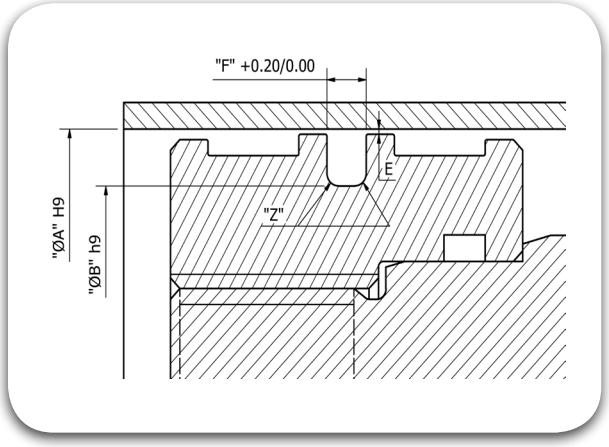

63.00

Part No	PTS 0630 0505 056						
Groove Dimension	ØA	x	ØB	x	F		
	63.00		50.50		5.60		
O-Ring Size	ID	50.17	x	C/S	5.33		

65.00

Part No	PTS 0650 0525 056						
Groove Dimension	ØA	x	ØB	x	F		
	65.00		52.50		5.60		
O-Ring Size	ID	50.17	x	C/S	5.33		

70.00

Part No	PTS 0700 0575 056						
Groove Dimension	ØA	x	ØB	x	F		
	70.00		57.50		5.60		
O-Ring Size	ID	56.52	x	C/S	5.33		

74.00

Part No	PTS 0740 0615 056						
Groove Dimension	ØA	x	ØB	x	F		
	74.00		61.50		5.60		
O-Ring Size	ID	59.69	x	C/S	5.33		

75.00

Part No	PTS 0750 0625 056						
Groove Dimension	ØA	x	ØB	x	F		
	75.00		62.50		5.60		
O-Ring Size	ID	62.87	x	C/S	5.33		

80.00

Part No	PTS 0800 0675 056						
Groove Dimension	ØA	x	ØB	x	F		
	80.00		67.50		5.60		
O-Ring Size	ID	66.04	x	C/S	5.33		

85.00

Part No	PTS 0850 0725 056						
Groove Dimension	ØA	x	ØB	x	F		
	85.00		72.50		5.60		
O-Ring Size	ID	72.39	x	C/S	5.33		

90.00

Part No	PTS 0900 0775 056						
Groove Dimension	ØA	x	ØB	x	F		
	90.00		77.50		5.60		
O-Ring Size	ID	75.57	x	C/S	5.33		

92.00

Part No	PTS 0920 0795 056						
Groove Dimension	ØA	x	ØB	x	F		
	92.00		79.50		5.60		
O-Ring Size	ID	78.74	x	C/S	5.33		

100.00

Part No	PTS 1000 0875 056						
Groove Dimension	ØA	x	ØB	x	F		
	100.00		87.50		5.60		
O-Ring Size	ID	85.09	x	C/S	5.33		

105.00

Part No	PTS 1050 0925 056						
Groove Dimension	ØA	x	ØB	x	F		
	105.00		92.50		5.60		
O-Ring Size	ID	91.44	x	C/S	5.33		

110.00

Part No	PTS 1100 0975 056						
Groove Dimension	ØA	x	ØB	x	F		
	110.00		97.50		5.60		
O-Ring Size	ID	97.79	x	C/S	X5.33		

115.00

Part No	PTS 1150 1025 056						
Groove Dimension	ØA	x	ØB	x	F		
	115.00		102.50		5.60		
O-Ring Size	ID	100.97	x	C/S	5.33		

120.00

Part No	PTS 1200 1075 056				
Groove Dimension	ØA	x	ØB	x	F
	120.00		107.50		5.60
O-Ring Size	ID	107.32	x	C/S	5.33

125.00

Part No	PTS 1250 1125 056				
Groove Dimension	ØA	x	ØB	x	F
	125.00		112.50		5.60
O-Ring Size	ID	110.49	x	C/S	5.33

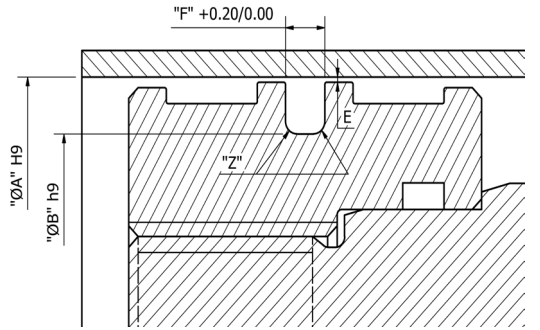

130.00

Part No	PTS 1300 1150 075				
Groove Dimension	ØA	x	ØB	x	F
	130.00		115.00		7.55
O-Ring Size	ID	113.49	x	C/S	7.00

140.00

Part No	PTS 1400 1250 075				
Groove Dimension	ØA	x	ØB	x	F
	140.00		125.00		7.55
O-Ring Size	ID	123.19	x	C/S	7.00

150.00

Part No	PTS 1500 1350 075				
Groove Dimension	ØA	x	ØB	x	F
	150.00		135.00		7.55
O-Ring Size	ID	132.72	x	C/S	7.00

160.00

Part No	PTS 1600 1450 075				
Groove Dimension	ØA	x	ØB	x	F
	160.00		145.00		7.55
O-Ring Size	ID	142.24	x	C/S	7.00

200.00

Part No	PTS 2000 1820 075				
Groove Dimension	ØA	x	ØB	x	F
	200.00		182.00		7.55
O-Ring Size	ID	177.17	x	C/S	7.00

220.00

Part No	PTS 2200 2020 075				
Groove Dimension	ØA	x	ØB	x	F
	220.00		202.00		7.55
O-Ring Size	ID	196.22	x	C/S	7.00

TRIADA
TECHNOLOGIES

Rod Seals
Triada Sealing Guide

#SealingExcellence

TRIADA

Important Information

Utmost care has been taken in the preparation and completion of this guide, but still it is not guaranteed that this is devoid of any typographical or inadvertent errors or omissions. Hence, Triada shall not be responsible for the end user's reliance on such errors or omissions. Information or data in this guide which includes and not limited to product profiles, product features, specifications etc. may be amended or modified at the sole discretion of Triada Technologies India Pvt. Ltd. (TTIPL) without any notice or prior intimation.

TTIPL strongly urge its customers and associates to validate the products that are being offered, to ensure its suitability and performance, based on their applications, hardware & operating conditions, through their own analysis and testing.

DOC. NO.: TT/AE/CAT/FE/03-2023

Table of Content

1 Introduction to Rod Seals

01 RUA B02 - B27

02 RUB B28 - B49

03 RUL B50 - B56

04 RUC B58 - B83

05 RAB B84 - B108

06 RPS B110 - B149

07 RBF B150 - B155

08 RSS B156 - B168

09 RTD B170 - B189

10 RES B190 - B197

11 RHC3 B198 - B203

12 RST B204 - B208

13 RHC B210 - B228

14 RSE B230 - B240

Introduction to Rod Seals

Rod Seals

Rod Seals also has an important role in a Cylinder Sealing System and its performance is mostly measured in terms of its ability to withhold the fluid within the Cylinder. By saying so, it does not undermine its function to assist the Piston Seal to develop force or load, depending on the function of the Cylinder. So, in other way, Rod Seal plays a dual role, by working in tandern with the Piston Seal and also by plugging any fluid leaving the system.

Rod Seals are mostly Single Acting by design, but some specific Lip profiles supports a back pumping action, which is impressive as it could enhance the operational life/performance of the sealing system. Comparatively, lot many innovative designs & compound formulations have taken place for the Rod Seals, all efforts aiming to reduce the frictional forces, improving wear and extrusion resistance, widen the temperature limits, handle higher pressures (especially spike pressures), while cost also is given a due consideration.

Unlike Piston Seals, in Rod Sealing, usage of a Tandem Sealing arrangement or usage of a secondary seal, is prevailing since long, idea being to stop every possibility of oil leaving the system, as any leakage actually add to the running cost of operation and also in the current scenario, is a major threat to the environment. A tandem Sealing System is highly recommended when the system is subjected to spike pressures, as in the case of a Bucket Cylinder in a Back-Hoe Loader or the Table Feed Cylinder in a Milling machine. But such a system brings in a new dimension to the Sealing, as the Secondary seal could potentially be running dry and thus the Seal material (and also the Wiper Seal material) should be able to run dry and still offer lowest possible Friction, which is really a challenge. So, the selection of the Secondary Seals should be done judiciously and Triada® could be contacted any time for assistance in this regard. It is also to be noted that even a difference in the extension stroke speed and retraction stroke speed counts while selecting the right Rod Sealing System.

As for the Piston Seals, Rod Seals also could be grouped into three, based on the System Pressures. Unlike the Piston Seal selection process, Rod Sealing system has to be selected carefully, ensuring that the entire sealing elements shall work as a team and these also includes the Wear Ring selection, Secondary Seal selection as well as the type of Wiper Seal selection and the entire selection process is derived from the application parameters.

Introduction to Rod Seals

Rod Seals, unlike the Piston Seals (which runs on a protected internal surface), are also expected to run on an externally exposed mating surface, as the Rod strokes in and out of the System. So, the Rod Seal compound selection has to be done carefully to address any unexpected treatments on to this Rod surface.

Triada® offers a comprehensive range of Rod Seals, suiting to each and every application that comes across. Our Customers have a 24 x 7 access to the Application Engineering Team at Triada, who shall propose the right Sealing System for their application. It is interesting to note that the positioning or placement of Rod Seals (Primary & Secondary) along with the Wear Rings, is as important as the selection of the Sealing elements itself. While we have listed mostly the standard profiles, it is also worth mentioning that Triada® can design and develop Custom made Seals, for any non-standard hardware size also or for that matter to meet any other requirements that doesn't fall under the standard or normal characteristics of the Seals.

Rod Seals

RUA

TRIADA
TECHNOLOGIES

#Sealing**Excellence**


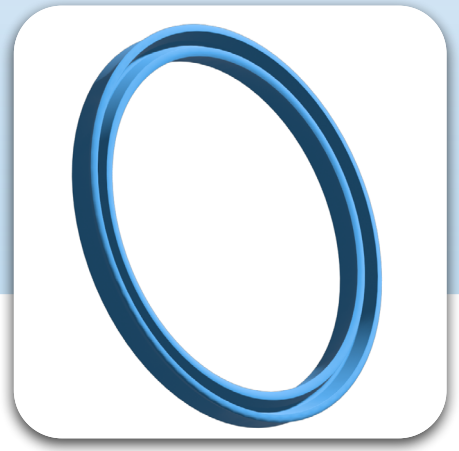

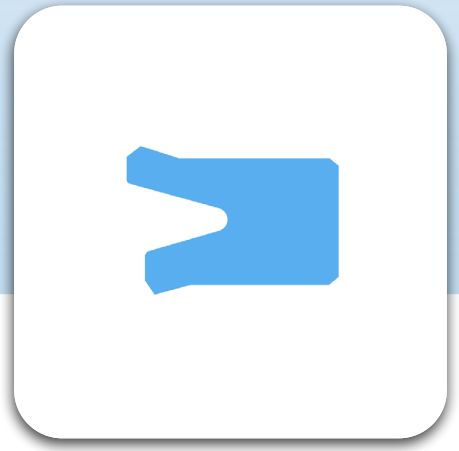

Description

The RUA is a Single Lip Rod U-Cup seal in TRIATHANE®(Polyurethane). The trimmed sealing lip provides an excellent static and dynamic tightness, the taper behind the lip reduces friction at the dynamic surface.

Diameter Range	Ø2.00 – Ø3500.00
Standard material	TRIATHANE® T479 (Polyurethane)
Temperature(°C)	-35° C to 110° C
Speed	≤ 0.50 m/s
Fluids	Hydraulic fluids (Mineral Oil based) depending on Seal Compounds selected.
Pressure	≤ 400 bar

Reciprocating | Oscillating | Rotary | Helix | Static | Single Acting | Double Acting

Material Details

Seal Material	Seal Material Code
TRIATHANE® Polyurethane	T479
TRIAFLEX® NBR 90 Shore A	T591

Nomenclature

Part No	RUA	0060	0120	058	T479
	Seal profile	Rod Dia x 10	Groove Dia x 10	Groove Width x 10	Seal Material Code

Groove Details

Operating Pressure (Bar)	Radial Clearance "E" max	
	ØA < 60mm	ØA > 60mm
50	0.40	0.50
100	0.30	0.40
200	0.20	0.30
300	0.15	0.20
400	0.10	0.15

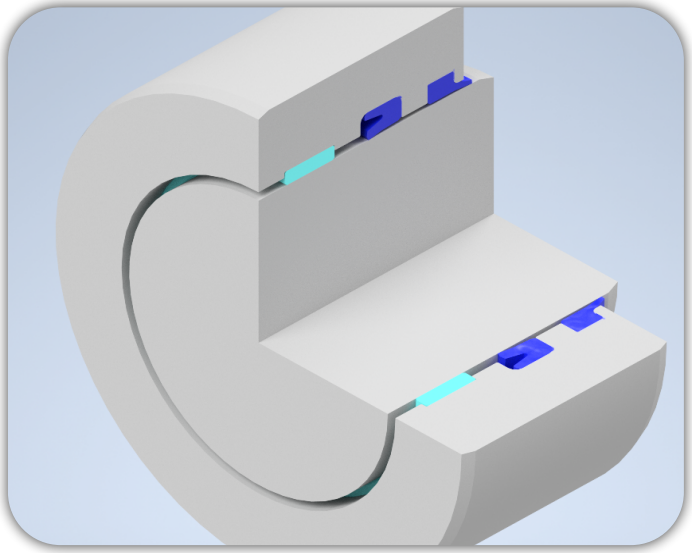

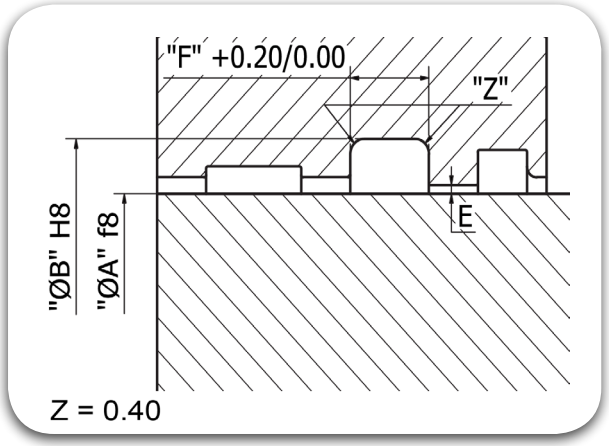

6.00

Part No	RUA 0060 0120 058				
Groove Dimension	ØA	x	ØB	x	F
	6.00		12.00		5.80

6.00

Part No	RUA 0060 0140 063				
Groove Dimension	ØA	x	ØB	x	F
	6.00		14.00		6.30

8.00

Part No	RUA 0080 0144 105				
Groove Dimension	ØA	x	ØB	x	F
	8.00		14.40		10.50

8.00

Part No	RUA 0080 0160 063				
Groove Dimension	ØA	x	ØB	x	F
	8.00		16.00		6.30

8.00

Part No	RUA 0080 0180 090				
Groove Dimension	ØA	x	ØB	x	F
	8.00		18.00		9.00

10.00

Part No	RUA 0100 0180 063				
Groove Dimension	ØA	x	ØB	x	F
	10.00		18.00		6.30

10.00

Part No	RUA 0100 0200 080				
Groove Dimension	ØA	x	ØB	x	F
	10.00		20.00		8.00

10.00

Part No	RUA 0100 0200 090				
Groove Dimension	ØA	x	ØB	x	F
	10.00		20.00		9.00

12.00

Part No	RUA 0120 0200 055				
Groove Dimension	ØA	x	ØB	x	F
	12.00		20.00		5.50

12.00

Part No	RUA 0120 0200 064				
Groove Dimension	ØA	x	ØB	x	F
	12.00		20.00		6.40

12.00

Part No	RUA 0120 0220 080				
Groove Dimension	ØA	x	ØB	x	F
	12.00		22.00		8.00

12.00

Part No	RUA 0120 0220 090				
Groove Dimension	ØA	x	ØB	x	F
	12.00		22.00		9.00

14.00

Part No	RUA 0140 0220 063				
Groove Dimension	ØA	x	ØB	x	F
	14.00		22.00		6.30

14.00

Part No	RUA 0140 0240 080					
Groove Dimension	ØA	x	ØB	x	F	
	14.00		24.00		8.00	

14.00

Part No	RUA 0140 0240 090					
Groove Dimension	ØA	x	ØB	x	F	
	14.00		24.00		9.00	

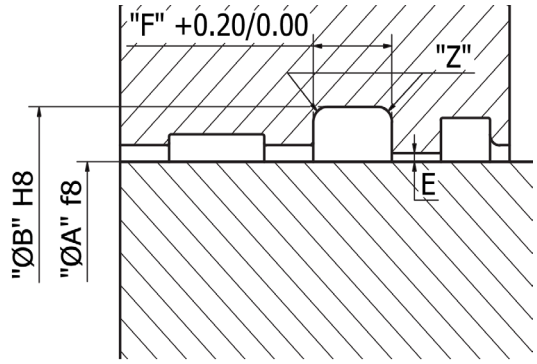

15.00

Part No	RUA 0150 0230 063					
Groove Dimension	ØA	x	ØB	x	F	
	15.00		23.00		6.30	

15.00

Part No	RUA 0150 0250 090					
Groove Dimension	ØA	x	ØB	x	F	
	15.00		25.00		9.00	

16.00

Part No	RUA 0160 0206 036					
Groove Dimension	ØA	x	ØB	x	F	
	16.00		20.60		3.60	

16.00

Part No	RUA 0160 0220 060					
Groove Dimension	ØA	x	ØB	x	F	
	16.00		22.00		6.00	

16.00

Part No	RUA 0160 0240 063					
Groove Dimension	ØA	x	ØB	x	F	
	16.00		24.00		6.30	

16.00

Part No	RUA 0160 0240 070					
Groove Dimension	ØA	x	ØB	x	F	
	16.00		24.00		7.00	

16.00

Part No	RUA 0160 0260 080					
Groove Dimension	ØA	x	ØB	x	F	
	16.00		26.00		8.00	

16.00

Part No	RUA 0160 0260 090					
Groove Dimension	ØA	x	ØB	x	F	
	16.00		26.00		9.00	

16.00

Part No	RUA 0160 0260 100					
Groove Dimension	ØA	x	ØB	x	F	
	16.00		26.00		10.00	

18.00

Part No	RUA 0180 0240 053					
Groove Dimension	ØA	x	ØB	x	F	
	18.00		24.00		5.30	

18.00

Part No	RUA 0180 0240 060					
Groove Dimension	ØA	x	ØB	x	F	
	18.00		24.00		6.00	

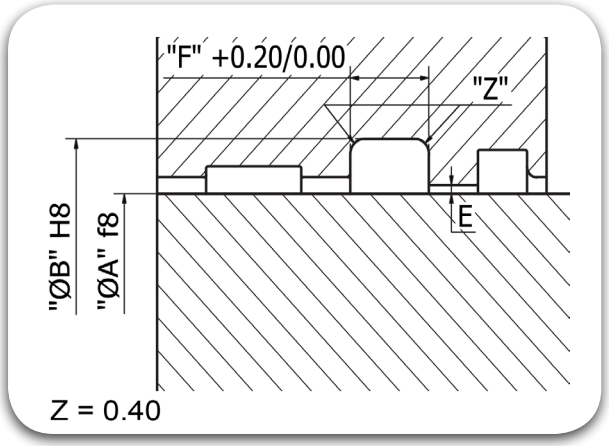

18.00

Part No	RUA 0180 0260 063					
Groove Dimension	ØA	x	ØB	x	F	
	18.00		26.00		6.30	

18.00

Part No	RUA 0180 0260 090					
Groove Dimension	ØA	x	ØB	x	F	
	18.00		26.00		9.00	

18.00

Part No	RUA 0180 0280 080					
Groove Dimension	ØA	x	ØB	x	F	
	18.00		28.00		8.00	

18.00

Part No	RUA 0180 0280 090					
Groove Dimension	ØA	x	ØB	x	F	
	18.00		28.00		9.00	

18.00

Part No	RUA 0180 0340 090					
Groove Dimension	ØA	x	ØB	x	F	
	18.00		34.00		9.00	

20.00

Part No	RUA 0200 0260 060					
Groove Dimension	ØA	x	ØB	x	F	
	20.00		26.00		6.00	

20.00

Part No	RUA 0200 0280 060					
Groove Dimension	ØA	x	ØB	x	F	
	20.00		28.00		6.00	

20.00

Part No	RUA 0200 2800 063					
Groove Dimension	ØA	x	ØB	x	F	
	20.00		28.00		6.30	

20.00

Part No	RUA 0200 0280 070					
Groove Dimension	ØA	x	ØB	x	F	
	20.00		28.00		7.00	

20.00

Part No	RUA 0200 0280 080					
Groove Dimension	ØA	x	ØB	x	F	
	20.00		28.00		8.00	

20.00

Part No	RUA 0200 0300 080					
Groove Dimension	ØA	x	ØB	x	F	
	20.00		30.00		8.00	

20.00

Part No	RUA 0200 0300 090					
Groove Dimension	ØA	x	ØB	x	F	
	20.00		30.00		9.00	

20.00

Part No	RUA 0200 0300 110					
Groove Dimension	ØA	x	ØB	x	F	
	20.00		30.00		11.00	

20.00

Part No	RUA 0200 0350 110
Groove Dimension	ØA 20.00 x ØB 35.00 x F 11.00

22.00

Part No	RUA 0220 0300 064
Groove Dimension	ØA 22.00 x ØB 30.00 x F 6.40

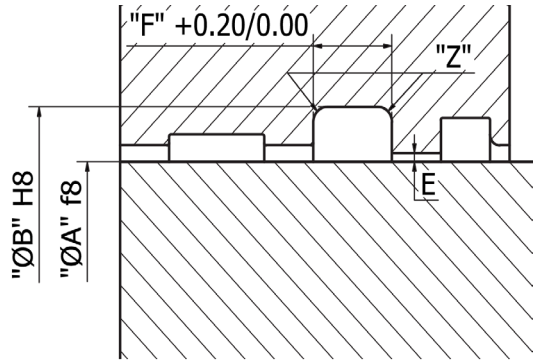

22.00

Part No	RUA 0220 0300 090
Groove Dimension	ØA 22.00 x ØB 30.00 x F 9.00

22.00

Part No	RUA 0220 0320 080
Groove Dimension	ØA 22.00 x ØB 32.00 x F 8.00

22.00

Part No	RUA 0220 0320 090
Groove Dimension	ØA 22.00 x ØB 32.00 x F 9.00

22.00

Part No	RUA 0220 0320 100
Groove Dimension	ØA 22.00 x ØB 32.00 x F 10.00

22.00

Part No	RUA 0220 0320 110
Groove Dimension	ØA 22.00 x ØB 32.00 x F 11.00

24.00

Part No	RUA 0240 0340 080
Groove Dimension	ØA 24.00 x ØB 34.00 x F 8.00

24.00

Part No	RUA 0240 0340 095
Groove Dimension	ØA 24.00 x ØB 34.00 x F 9.50

25.00

Part No	RUA 0250 0320 070
Groove Dimension	ØA 25.00 x ØB 32.00 x F 7.00

25.00

Part No	RUA 0250 0330 063
Groove Dimension	ØA 25.00 x ØB 33.00 x F 6.30

25.00

Part No	RUA 0250 0330 070
Groove Dimension	ØA 25.00 x ØB 33.00 x F 7.00

25.00

Part No	RUA 0250 0330 080
Groove Dimension	ØA 25.00 x ØB 33.00 x F 8.00

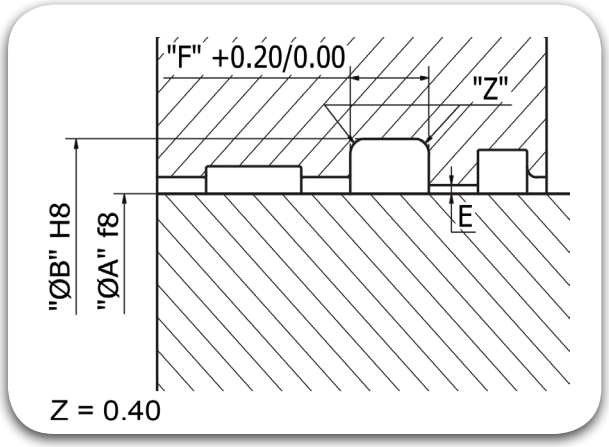

25.00

Part No	RUA 0250 0330 110					
Groove Dimension	ØA	x	ØB	x	F	
	25.00		33.00		11.00	

25.00

Part No	RUA 0250 0350 080					
Groove Dimension	ØA	x	ØB	x	F	
	25.00		35.00		8.00	

25.00

Part No	RUA 0250 0350 090					
Groove Dimension	ØA	x	ØB	x	F	
	25.00		35.00		9.00	

25.00

Part No	RUA 0250 0350 110					
Groove Dimension	ØA	x	ØB	x	F	
	25.00		35.00		11.00	

25.00

Part No	RUA 0250 0380 100					
Groove Dimension	ØA	x	ØB	x	F	
	25.00		38.00		10.00	

25.00

Part No	RUA 0250 0400 110					
Groove Dimension	ØA	x	ØB	x	F	
	25.00		40.00		11.00	

28.00

Part No	RUA 0280 0360 063					
Groove Dimension	ØA	x	ØB	x	F	
	28.00		36.00		6.30	

28.00

Part No	RUA 0280 0380 080					
Groove Dimension	ØA	x	ØB	x	F	
	28.00		38.00		8.00	

28.00

Part No	RUA 0280 0380 090					
Groove Dimension	ØA	x	ØB	x	F	
	28.00		38.00		9.00	

28.00

Part No	RUA 0280 0380 110					
Groove Dimension	ØA	x	ØB	x	F	
	28.00		38.00		11.00	

28.00

Part No	RUA 0280 0400 095					
Groove Dimension	ØA	x	ØB	x	F	
	28.00		40.00		9.50	

28.00

Part No	RUA 0280 0400 110					
Groove Dimension	ØA	x	ØB	x	F	
	28.00		40.00		11.00	

28.00

Part No	RUA 0280 0430 125					
Groove Dimension	ØA	x	ØB	x	F	
	28.00		43.00		12.50	

29.00

Part No	RUA 0290 0350 063
Groove Dimension	ØA 29.00 x ØB 35.00 x F 6.30

30.00

Part No	RUA 0300 0380 063
Groove Dimension	ØA 30.00 x ØB 38.00 x F 6.30

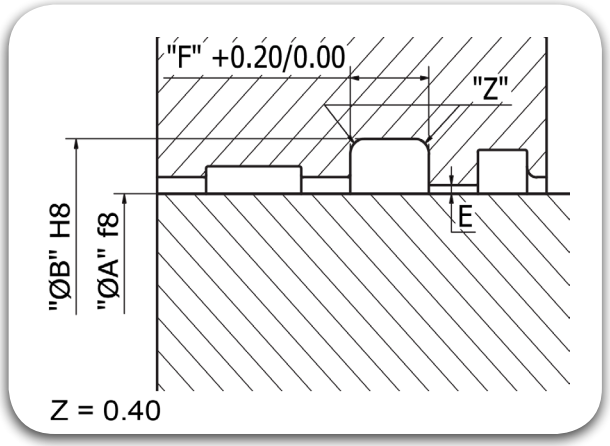

30.00

Part No	RUA 0300 0380 090
Groove Dimension	ØA 30.00 x ØB 38.00 x F 9.00

30.00

Part No	RUA 0300 0400 063
Groove Dimension	ØA 30.00 x ØB 40.00 x F 6.30

30.00

Part No	RUA 0300 0400 080
Groove Dimension	ØA 30.00 x ØB 40.00 x F 8.00

30.00

Part No	RUA 0300 0400 105
Groove Dimension	ØA 30.00 x ØB 40.00 x F 10.50

30.00

Part No	RUA 0300 0400 110
Groove Dimension	ØA 30.00 x ØB 40.00 x F 11.00

30.00

Part No	RUA 0300 0430 100
Groove Dimension	ØA 30.00 x ØB 43.00 x F 10.00

30.00

Part No	RUA 0300 0450 090
Groove Dimension	ØA 30.00 x ØB 45.00 x F 9.00

30.00

Part No	RUA 0300 0450 110
Groove Dimension	ØA 30.00 x ØB 45.00 x F 11.00

32.00

Part No	RUA 0320 0400 063
Groove Dimension	ØA 32.00 x ØB 40.00 x F 6.30

32.00

Part No	RUA 0320 0400 090
Groove Dimension	ØA 32.00 x ØB 40.00 x F 9.00

32.00

Part No	RUA 0320 0420 080
Groove Dimension	ØA 32.00 x ØB 42.00 x F 8.00

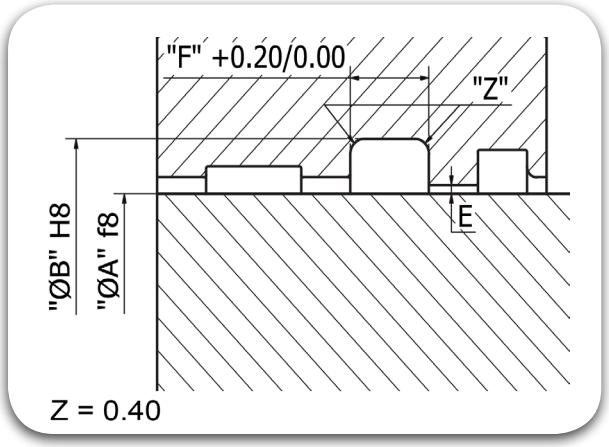

32.00

Part No	RUA 0320 0420 090					
Groove Dimension	ØA	x	ØB	x	F	
	32.00		42.00		9.00	

32.00

Part No	RUA 0320 0420 110					
Groove Dimension	ØA	x	ØB	x	F	
	32.00		42.00		11.00	

32.00

Part No	RUA 0320 0425 090					
Groove Dimension	ØA	x	ØB	x	F	
	32.00		42.50		9.00	

32.00

Part No	RUA 0320 0450 105					
Groove Dimension	ØA	x	ØB	x	F	
	32.00		45.00		10.50	

32.00

Part No	RUA 0320 0450 110					
Groove Dimension	ØA	x	ØB	x	F	
	32.00		45.00		11.00	

32.00

Part No	RUA 0320 0470 110					
Groove Dimension	ØA	x	ØB	x	F	
	32.00		47.00		11.00	

33.00

Part No	RUA 0330 0430 110					
Groove Dimension	ØA	x	ØB	x	F	
	33.00		43.00		11.00	

35.00

Part No	RUA 0350 0430 063					
Groove Dimension	ØA	x	ØB	x	F	
	35.00		43.00		6.30	

35.00

Part No	RUA 0350 0430 090					
Groove Dimension	ØA	x	ØB	x	F	
	35.00		43.00		9.00	

35.00

Part No	RUA 0350 0450 080					
Groove Dimension	ØA	x	ØB	x	F	
	35.00		45.00		8.00	

35.00

Part No	RUA 0350 0450 110					
Groove Dimension	ØA	x	ØB	x	F	
	35.00		45.00		11.00	

35.00

Part No	RUA 0350 0450 135					
Groove Dimension	ØA	x	ØB	x	F	
	35.00		45.00		13.50	

35.00

Part No	RUA 0350 0460 090					
Groove Dimension	ØA	x	ØB	x	F	
	35.00		46.00		9.00	

35.00

Part No	RUA 0350 0460 100					
Groove Dimension	ØA	x	ØB	x	F	
	35.00		46.00		10.00	

35.00

Part No	RUA 0350 0470 090					
Groove Dimension	ØA	x	ØB	x	F	
	35.00		47.00		9.00	

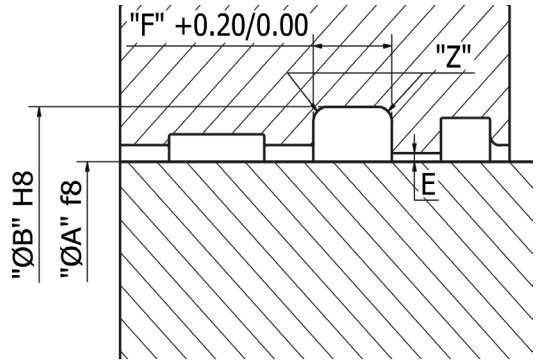

35.00

Part No	RUA 0350 0500 110					
Groove Dimension	ØA	x	ØB	x	F	
	35.00		50.00		11.00	

35.00

Part No	RUA 0350 0550 130					
Groove Dimension	ØA	x	ØB	x	F	
	35.00		55.00		13.00	

36.00

Part No	RUA 0360 0440 064					
Groove Dimension	ØA	x	ØB	x	F	
	36.00		44.00		6.40	

36.00

Part No	RUA 0360 0440 090					
Groove Dimension	ØA	x	ØB	x	F	
	36.00		44.00		9.00	

36.00

Part No	RUA 0360 0460 080					
Groove Dimension	ØA	x	ØB	x	F	
	36.00		46.00		8.00	

36.00

Part No	RUA 0360 0460 110					
Groove Dimension	ØA	x	ØB	x	F	
	36.00		46.00		11.00	

36.00

Part No	RUA 0360 0480 080					
Groove Dimension	ØA	x	ØB	x	F	
	36.00		48.00		8.00	

36.00

Part No	RUA 0360 0480 090					
Groove Dimension	ØA	x	ØB	x	F	
	36.00		48.00		9.00	

36.00

Part No	RUA 0360 0510 110					
Groove Dimension	ØA	x	ØB	x	F	
	36.00		51.00		11.00	

36.00

Part No	RUA 0360 0510 125					
Groove Dimension	ØA	x	ØB	x	F	
	36.00		51.00		12.50	

37.00

Part No	RUA 0370 0450 063					
Groove Dimension	ØA	x	ØB	x	F	
	37.00		45.00		6.30	

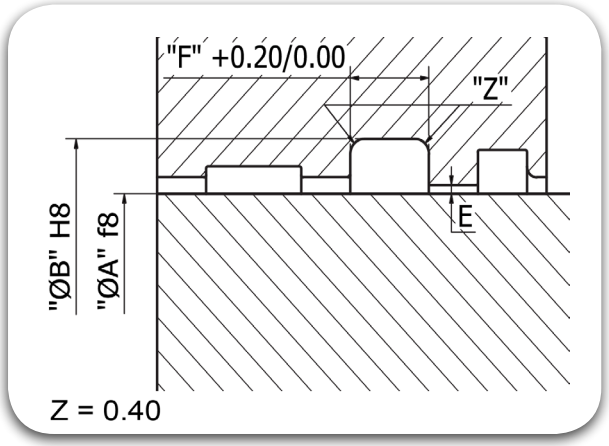

38.00

Part No	RUA 0380 0445 053					
Groove Dimension	ØA	x	ØB	x	F	
	38.00		44.50		5.30	

38.00

Part No	RUA 0380 0450 055					
Groove Dimension	ØA	x	ØB	x	F	
	38.00		45.00		5.50	

38.00

Part No	RUA 0380 0450 070					
Groove Dimension	ØA	x	ØB	x	F	
	38.00		45.00		7.00	

40.00

Part No	RUA 0400 0480 063					
Groove Dimension	ØA	x	ØB	x	F	
	40.00		48.00		6.30	

40.00

Part No	RUA 0400 0480 090					
Groove Dimension	ØA	x	ØB	x	F	
	40.00		48.00		9.00	

40.00

Part No	RUA 0400 0495 105					
Groove Dimension	ØA	x	ØB	x	F	
	40.00		49.50		10.50	

40.00

Part No	RUA 0400 0500 080					
Groove Dimension	ØA	x	ØB	x	F	
	40.00		50.00		8.00	

40.00

Part No	RUA 0400 0500 100					
Groove Dimension	ØA	x	ØB	x	F	
	40.00		50.00		10.00	

40.00

Part No	RUA 0400 0500 110					
Groove Dimension	ØA	x	ØB	x	F	
	40.00		50.00		11.00	

40.00

Part No	RUA 0400 0500 135					
Groove Dimension	ØA	x	ØB	x	F	
	40.00		50.00		13.50	

40.00

Part No	RUA 0400 0520 090					
Groove Dimension	ØA	x	ØB	x	F	
	40.00		52.00		9.00	

40.00

Part No	RUA 0400 0550 110					
Groove Dimension	ØA	x	ØB	x	F	
	40.00		55.00		11.00	

40.00

Part No	RUA 0400 0550 125					
Groove Dimension	ØA	x	ØB	x	F	
	40.00		55.00		12.50	

40.00

Part No	RUA 0400 0600 130					
Groove Dimension	ØA	x	ØB	x	F	
	40.00		60.00		13.00	

42.00

Part No	RUA 0420 0620 110					
Groove Dimension	ØA	x	ØB	x	F	
	42.00		62.00		11.00	

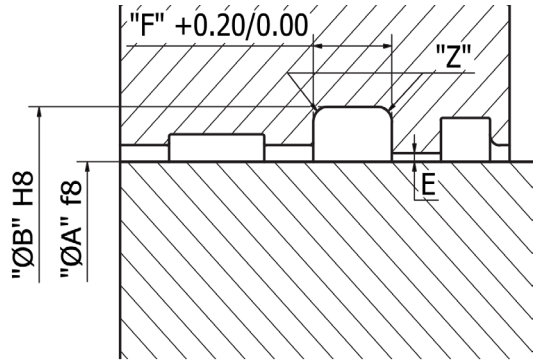

42.00

Part No	RUA 0420 0620 130					
Groove Dimension	ØA	x	ØB	x	F	
	42.00		62.00		13.00	

45.00

Part No	RUA 0450 0530 063					
Groove Dimension	ØA	x	ØB	x	F	
	45.00		53.00		6.30	

45.00

Part No	RUA 0450 0530 110					
Groove Dimension	ØA	x	ØB	x	F	
	45.00		53.00		11.00	

45.00

Part No	RUA 0450 0530 130					
Groove Dimension	ØA	x	ØB	x	F	
	45.00		53.00		13.00	

45.00

Part No	RUA 0450 0550 080					
Groove Dimension	ØA	x	ØB	x	F	
	45.00		55.00		8.00	

45.00

Part No	RUA 0450 0550 110					
Groove Dimension	ØA	x	ØB	x	F	
	45.00		55.00		11.00	

45.00

Part No	RUA 0450 0577 105					
Groove Dimension	ØA	x	ØB	x	F	
	45.00		57.70		10.50	

45.00

Part No	RUA 0450 0580 100					
Groove Dimension	ØA	x	ØB	x	F	
	45.00		58.00		10.00	

45.00

Part No	RUA 0450 0600 110					
Groove Dimension	ØA	x	ØB	x	F	
	45.00		60.00		11.00	

45.00

Part No	RUA 0450 0600 125					
Groove Dimension	ØA	x	ØB	x	F	
	45.00		60.00		12.50	

45.00

Part No	RUA 0450 0650 110					
Groove Dimension	ØA	x	ØB	x	F	
	45.00		65.00		11.00	

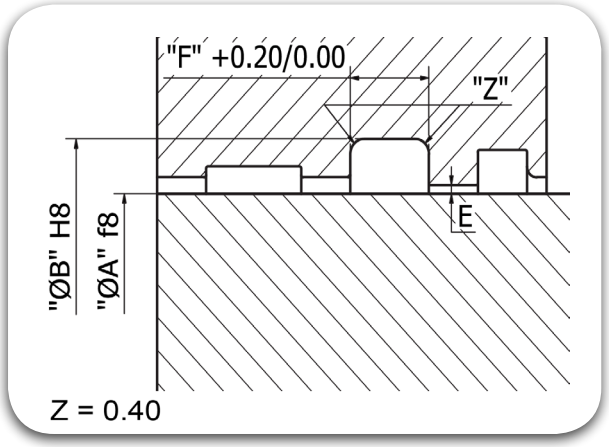

45.00

Part No	RUA 0450 0650 130					
Groove Dimension	ØA	x	ØB	x	F	
	45.00		65.00		13.00	

45.00

Part No	RUA 0450 0650 145					
Groove Dimension	ØA	x	ØB	x	F	
	45.00		65.00		14.50	

46.00

Part No	RUA 0460 0560 080					
Groove Dimension	ØA	x	ØB	x	F	
	46.00		56.00		8.00	

50.00

Part No	RUA 0500 0600 080					
Groove Dimension	ØA	x	ØB	x	F	
	50.00		60.00		8.00	

50.00

Part No	RUA 0500 0600 110					
Groove Dimension	ØA	x	ØB	x	F	
	50.00		60.00		11.00	

50.00

Part No	RUA 0500 0600 130					
Groove Dimension	ØA	x	ØB	x	F	
	50.00		60.00		13.00	

50.00

Part No	RUA 0500 0620 090					
Groove Dimension	ØA	x	ØB	x	F	
	50.00		62.00		9.00	

50.00

Part No	RUA 0500 0620 100					
Groove Dimension	ØA	x	ØB	x	F	
	50.00		62.00		10.00	

50.00

Part No	RUA 0500 0627 105					
Groove Dimension	ØA	x	ØB	x	F	
	50.00		62.70		10.50	

50.00

Part No	RUA 0500 0630 110					
Groove Dimension	ØA	x	ØB	x	F	
	50.00		63.00		11.00	

50.00

Part No	RUA 0500 0650 110					
Groove Dimension	ØA	x	ØB	x	F	
	50.00		65.00		11.00	

50.00

Part No	RUA 0500 0650 125					
Groove Dimension	ØA	x	ØB	x	F	
	50.00		65.00		12.50	

50.00

Part No	RUA 0500 0680 100					
Groove Dimension	ØA	x	ØB	x	F	
	50.00		68.00		10.00	

50.00

Part No	RUA 0500 0700 110
Groove Dimension	ØA 50.00 x ØB 70.00 x F 11.00

50.00

Part No	RUA 0500 0700 130
Groove Dimension	ØA 50.00 x ØB 70.00 x F 13.00

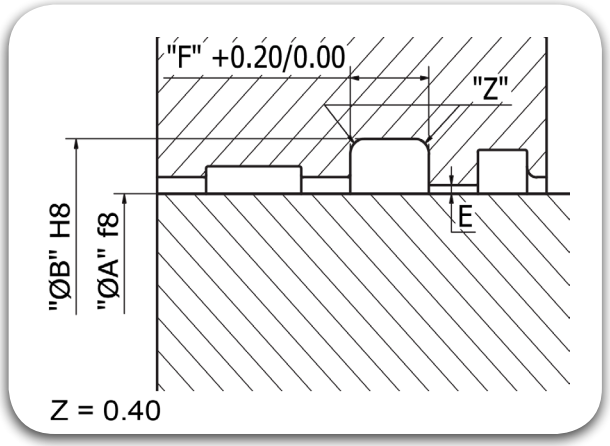

50.00

Part No	RUA 0500 0700 145
Groove Dimension	ØA 50.00 x ØB 70.00 x F 14.50

52.00

Part No	RUA 0520 0620 110
Groove Dimension	ØA 52.00 x ØB 62.00 x F 11.00

52.00

Part No	RUA 0520 0620 130
Groove Dimension	ØA 52.00 x ØB 62.00 x F 13.00

55.00

Part No	RUA 0550 0630 130
Groove Dimension	ØA 55.00 x ØB 63.00 x F 13.00

55.00

Part No	RUA 0550 0650 080
Groove Dimension	ØA 55.00 x ØB 65.00 x F 8.00

55.00

Part No	RUA 0550 0650 110
Groove Dimension	ØA 55.00 x ØB 65.00 x F 11.00

55.00

Part No	RUA 0550 0650 130
Groove Dimension	ØA 55.00 x ØB 65.00 x F 13.00

55.00

Part No	RUA 0550 0650 145
Groove Dimension	ØA 55.00 x ØB 65.00 x F 14.50

55.00

Part No	RUA 0550 0670 110
Groove Dimension	ØA 55.00 x ØB 67.00 x F 11.00

55.00

Part No	RUA 0550 0680 110
Groove Dimension	ØA 55.00 x ØB 68.00 x F 11.00

55.00

Part No	RUA 0550 0700 110
Groove Dimension	ØA 55.00 x ØB 70.00 x F 11.00

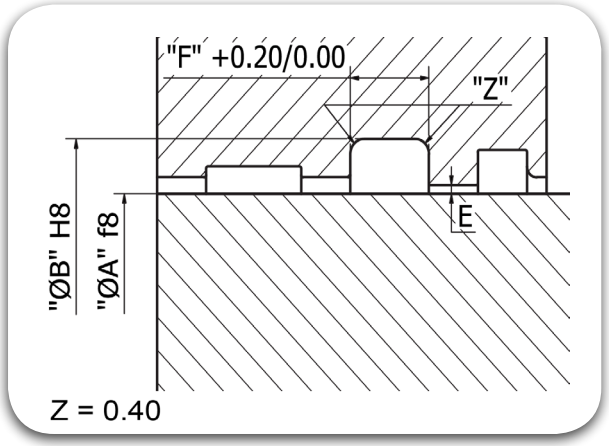

55.00

Part No	RUA 0550 0700 130					
Groove Dimension	ØA	x	ØB	x	F	
	55.00		70.00		13.00	

55.00

Part No	RUA 0550 0750 130					
Groove Dimension	ØA	x	ØB	x	F	
	55.00		75.00		13.00	

55.00

Part No	RUA 0550 0750 145					
Groove Dimension	ØA	x	ØB	x	F	
	55.00		75.00		14.50	

56.00

Part No	RUA 0560 0660 110					
Groove Dimension	ØA	x	ØB	x	F	
	56.00		66.00		11.00	

56.00

Part No	RUA 0560 0710 110					
Groove Dimension	ØA	x	ØB	x	F	
	56.00		71.00		11.00	

56.00

Part No	RUA 0560 0710 125					
Groove Dimension	ØA	x	ØB	x	F	
	56.00		71.00		12.50	

56.00

Part No	RUA 0560 0710 135					
Groove Dimension	ØA	x	ØB	x	F	
	56.00		71.00		13.50	

56.00

Part No	RUA 0560 0760 130					
Groove Dimension	ØA	x	ØB	x	F	
	56.00		76.00		13.00	

56.00

Part No	RUA 0560 0760 145					
Groove Dimension	ØA	x	ØB	x	F	
	56.00		76.00		14.50	

56.00

Part No	RUA 0560 0760 160					
Groove Dimension	ØA	x	ØB	x	F	
	56.00		76.00		16.00	

60.00

Part No	RUA 0600 0680 135					
Groove Dimension	ØA	x	ØB	x	F	
	60.00		68.00		13.50	

60.00

Part No	RUA 0600 0700 080					
Groove Dimension	ØA	x	ØB	x	F	
	60.00		70.00		8.00	

60.00

Part No	RUA 0600 0700 110					
Groove Dimension	ØA	x	ØB	x	F	
	60.00		70.00		11.00	

60.00

Part No	RUA 0600 0700 130					
Groove Dimension	ØA	x	ØB	x	F	
	60.00		70.00		13.00	

60.00

Part No	RUA 0600 0720 090					
Groove Dimension	ØA	x	ØB	x	F	
	60.00		72.00		9.00	

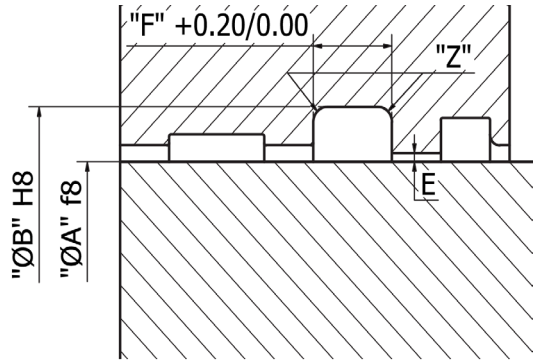

60.00

Part No	RUA 0600 0720 100					
Groove Dimension	ØA	x	ØB	x	F	
	60.00		72.00		10.00	

60.00

Part No	RUA 0600 0730 110					
Groove Dimension	ØA	x	ØB	x	F	
	60.00		73.00		11.00	

60.00

Part No	RUA 0600 0750 110					
Groove Dimension	ØA	x	ØB	x	F	
	60.00		75.00		11.00	

60.00

Part No	RUA 0600 0750 130					
Groove Dimension	ØA	x	ØB	x	F	
	60.00		75.00		13.00	

60.00

Part No	RUA 0600 0770 120					
Groove Dimension	ØA	x	ØB	x	F	
	60.00		77.00		12.00	

60.00

Part No	RUA 0600 0800 130					
Groove Dimension	ØA	x	ØB	x	F	
	60.00		80.00		13.00	

60.00

Part No	RUA 0600 0800 145					
Groove Dimension	ØA	x	ØB	x	F	
	60.00		80.00		14.50	

61.00

Part No	RUA 0610 0690 085					
Groove Dimension	ØA	x	ØB	x	F	
	61.00		69.00		8.50	

62.00

Part No	RUA 0620 0740 140					
Groove Dimension	ØA	x	ØB	x	F	
	62.00		74.00		14.00	

63.00

Part No	RUA 0630 0730 110					
Groove Dimension	ØA	x	ØB	x	F	
	63.00		73.00		11.00	

63.00

Part No	RUA 0630 0730 130					
Groove Dimension	ØA	x	ØB	x	F	
	63.00		73.00		13.00	

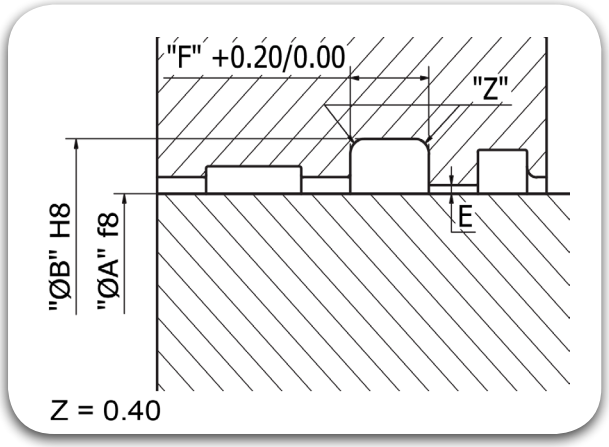

63.00

Part No	RUA 0630 0750 096					
Groove Dimension	ØA	x	ØB	x	F	
	63.00		75.00		9.60	

63.00

Part No	RUA 0630 0750 130					
Groove Dimension	ØA	x	ØB	x	F	
	63.00		75.00		13.00	

63.00

Part No	RUA 0630 0780 110					
Groove Dimension	ØA	x	ØB	x	F	
	63.00		78.00		11.00	

63.00

Part No	RUA 0630 0780 125					
Groove Dimension	ØA	x	ØB	x	F	
	63.00		78.00		12.50	

63.00

Part No	RUA 0630 0780 130					
Groove Dimension	ØA	x	ØB	x	F	
	63.00		78.00		13.00	

63.00

Part No	RUA 0630 0830 130					
Groove Dimension	ØA	x	ØB	x	F	
	63.00		83.00		13.00	

63.00

Part No	RUA 0630 0830 145					
Groove Dimension	ØA	x	ØB	x	F	
	63.00		83.00		14.50	

63.00

Part No	RUA 0630 0830 160					
Groove Dimension	ØA	x	ØB	x	F	
	63.00		83.00		16.00	

65.00

Part No	RUA 0650 0730 100					
Groove Dimension	ØA	x	ØB	x	F	
	65.00		73.00		10.00	

65.00

Part No	RUA 0650 0750 110					
Groove Dimension	ØA	x	ØB	x	F	
	65.00		75.00		11.00	

65.00

Part No	RUA 0650 0750 130					
Groove Dimension	ØA	x	ØB	x	F	
	65.00		75.00		13.00	

65.00

Part No	RUA 0650 0750 145					
Groove Dimension	ØA	x	ØB	x	F	
	65.00		75.00		14.50	

65.00

Part No	RUA 0650 0770 096					
Groove Dimension	ØA	x	ØB	x	F	
	65.00		77.00		9.60	

65.00

Part No	RUA 0650 0770 100		
Groove Dimension	ØA	ØB	F
	65.00	77.00	10.00

65.00

Part No	RUA 0650 0800 110		
Groove Dimension	ØA	ØB	F
	65.00	80.00	11.00

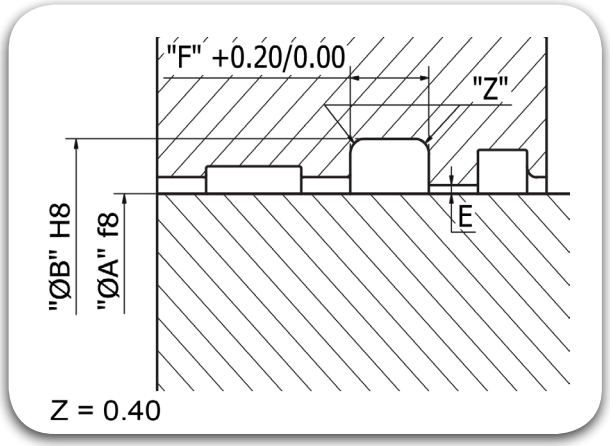

65.00

Part No	RUA 0650 0800 130		
Groove Dimension	ØA	ØB	F
	65.00	80.00	13.00

65.00

Part No	RUA 0650 0850 130		
Groove Dimension	ØA	ØB	F
	65.00	85.00	13.00

65.00

Part No	RUA 0650 0850 145		
Groove Dimension	ØA	ØB	F
	65.00	85.00	14.50

70.00

Part No	RUA 0700 0800 065		
Groove Dimension	ØA	ØB	F
	70.00	80.00	6.50

70.00

Part No	RUA 0700 0800 080		
Groove Dimension	ØA	ØB	F
	70.00	80.00	8.00

70.00

Part No	RUA 0700 0800 110		
Groove Dimension	ØA	ØB	F
	70.00	80.00	11.00

70.00

Part No	RUA 0700 0800 130		
Groove Dimension	ØA	ØB	F
	70.00	80.00	13.00

70.00

Part No	RUA 0700 0820 096		
Groove Dimension	ØA	ØB	F
	70.00	82.00	9.60

70.00

Part No	RUA 0700 0850 110		
Groove Dimension	ØA	ØB	F
	70.00	85.00	11.00

70.00

Part No	RUA 0700 0850 125		
Groove Dimension	ØA	ØB	F
	70.00	85.00	12.50

70.00

Part No	RUA 0700 0850 130		
Groove Dimension	ØA	ØB	F
	70.00	85.00	13.00

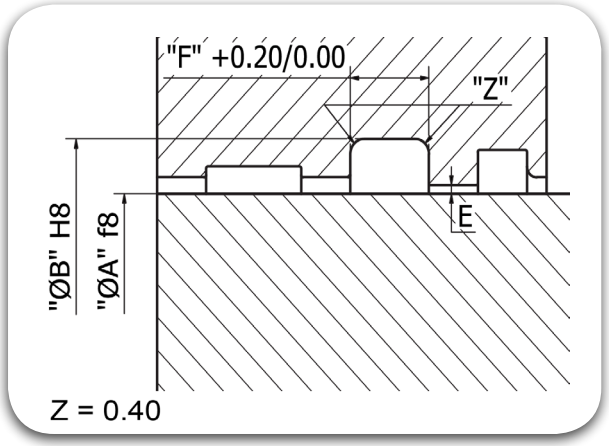

70.00

Part No	RUA 0700 0900 130					
Groove Dimension	ØA	x	ØB	x	F	
	70.00		90.00		13.00	

70.00

Part No	RUA 0070 0900 145					
Groove Dimension	ØA	x	ØB	x	F	
	70.00		90.00		14.50	

70.00

Part No	RUA 0070 0900 160					
Groove Dimension	ØA	x	ØB	x	F	
	70.00		90.00		16.00	

73.00

Part No	RUA 0730 0825 080					
Groove Dimension	ØA	x	ØB	x	F	
	73.00		82.50		8.00	

75.00

Part No	RUA 0750 0850 080					
Groove Dimension	ØA	x	ØB	x	F	
	75.00		85.00		8.00	

75.00

Part No	RUA 0750 0850 130					
Groove Dimension	ØA	x	ØB	x	F	
	75.00		85.00		13.00	

75.00

Part No	RUA 0750 0870 096					
Groove Dimension	ØA	x	ØB	x	F	
	75.00		87.00		9.60	

75.00

Part No	RUA 0750 0900 110					
Groove Dimension	ØA	x	ØB	x	F	
	75.00		90.00		11.00	

75.00

Part No	RUA 0750 0900 130					
Groove Dimension	ØA	x	ØB	x	F	
	75.00		90.00		13.00	

75.00

Part No	RUA 0750 0950 130					
Groove Dimension	ØA	x	ØB	x	F	
	75.00		95.00		13.00	

75.00

Part No	RUA 0750 0950 145					
Groove Dimension	ØA	x	ØB	x	F	
	75.00		95.00		14.50	

76.00

Part No	RUA 0760 0840 085					
Groove Dimension	ØA	x	ØB	x	F	
	76.00		84.00		8.50	

80.00

Part No	RUA 0800 0900 080					
Groove Dimension	ØA	x	ØB	x	F	
	80.00		90.00		8.00	

80.00

Part No	RUA 0800 0900 110
Groove Dimension	ØA 80.00 x ØB 90.00 x F 11.00

80.00

Part No	RUA 0800 0900 130
Groove Dimension	ØA 80.00 x ØB 90.00 x F 13.00

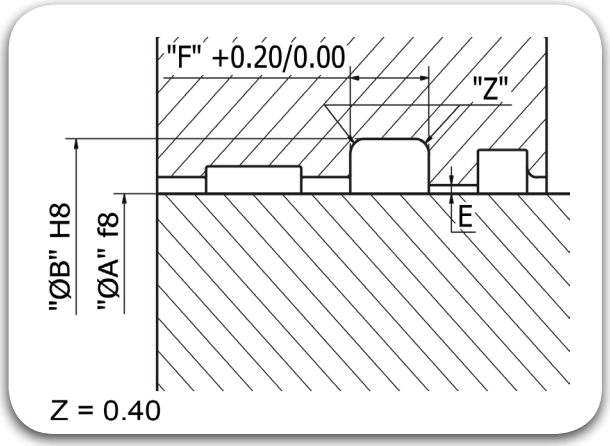

80.00

Part No	RUA 0800 0900 150
Groove Dimension	ØA 80.00 x ØB 90.00 x F 15.00

80.00

Part No	RUA 0800 0920 096
Groove Dimension	ØA 80.00 x ØB 92.00 x F 9.60

80.00

Part No	RUA 0800 0950 110
Groove Dimension	ØA 80.00 x ØB 95.00 x F 11.00

80.00

Part No	RUA 0800 0950 125
Groove Dimension	ØA 80.00 x ØB 95.00 x F 12.50

80.00

Part No	RUA 0800 0950 130
Groove Dimension	ØA 80.00 x ØB 95.00 x F 13.00

80.00

Part No	RUA 0800 0950 130
Groove Dimension	ØA 80.00 x ØB 95.00 x F 13.00

80.00

Part No	RUA 0800 1000 130
Groove Dimension	ØA 80.00 x ØB 100.00 x F 13.00

80.00

Part No	RUA 0800 1000 145
Groove Dimension	ØA 80.00 x ØB 100.00 x F 14.50

80.00

Part No	RUA 0800 1000 160
Groove Dimension	ØA 80.00 x ØB 100.00 x F 16.00

85.00

Part No	RUA 0850 0950 080
Groove Dimension	ØA 85.00 x ØB 95.00 x F 8.00

85.00

Part No	RUA 0850 1000 120
Groove Dimension	ØA 85.00 x ØB 100.00 x F 12.00

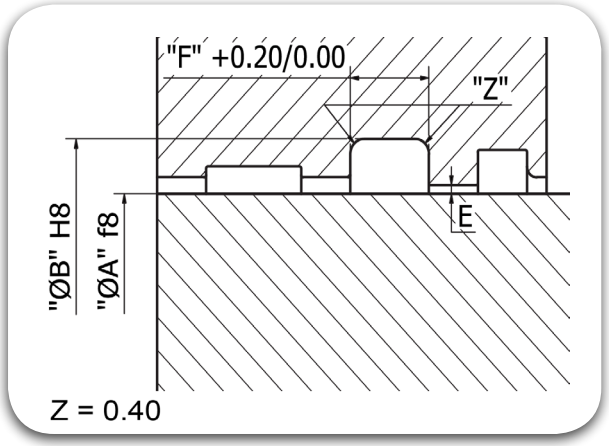

85.00

Part No	RUA 0850 1000 125					
Groove Dimension	ØA	x	ØB	x	F	
	85.00		100.00		12.50	

85.00

Part No	RUA 0850 1000 130					
Groove Dimension	ØA	x	ØB	x	F	
	85.00		100.00		13.00	

85.00

Part No	RUA 0850 1050 130					
Groove Dimension	ØA	x	ØB	x	F	
	85.00		105.00		13.00	

85.00

Part No	RUA 0850 1050 145					
Groove Dimension	ØA	x	ØB	x	F	
	85.00		105.00		14.50	

90.00

Part No	RUA 0900 1000 125					
Groove Dimension	ØA	x	ØB	x	F	
	90.00		100.00		12.50	

90.00

Part No	RUA 0900 1050 095					
Groove Dimension	ØA	x	ØB	x	F	
	90.00		105.00		9.50	

90.00

Part No	RUA 0900 1050 105					
Groove Dimension	ØA	x	ØB	x	F	
	90.00		105.00		10.50	

90.00

Part No	RUA 0900 1050 125					
Groove Dimension	ØA	x	ØB	x	F	
	90.00		105.00		12.50	

90.00

Part No	RUA 0900 1050 130					
Groove Dimension	ØA	x	ØB	x	F	
	90.00		105.00		13.00	

90.00

Part No	RUA 0900 1100 130					
Groove Dimension	ØA	x	ØB	x	F	
	90.00		110.00		13.00	

90.00

Part No	RUA 0900 1100 160					
Groove Dimension	ØA	x	ØB	x	F	
	90.00		110.00		16.00	

91.00

Part No	RUA 0910 0990 085					
Groove Dimension	ØA	x	ØB	x	F	
	91.00		99.00		8.50	

93.00

Part No	RUA 0930 1040 110					
Groove Dimension	ØA	x	ØB	x	F	
	93.00		104.00		11.00	

95.00

Part No	RUA 0950 1050 110		
Groove Dimension	ØA	ØB	F
	95.00	105.00	11.00

95.00

Part No	RUA 0950 1100 130		
Groove Dimension	ØA	ØB	F
	95.00	110.00	13.00

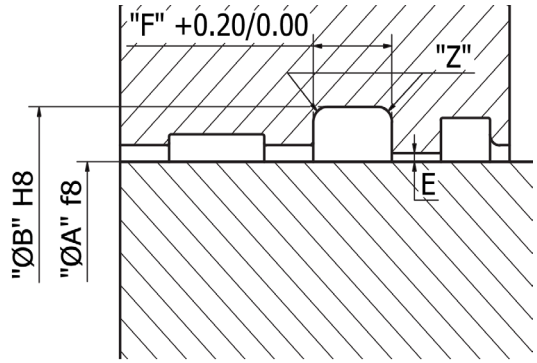

95.00

Part No	RUA 0950 1150 130		
Groove Dimension	ØA	ØB	F
	95.00	115.00	13.00

98.00

Part No	RUA 0980 1180 110		
Groove Dimension	ØA	ØB	F
	98.00	118.00	11.00

100.00

Part No	RUA 1000 1100 150		
Groove Dimension	ØA	ØB	F
	100.00	110.00	15.00

100.00

Part No	RUA 1000 1130 135		
Groove Dimension	ØA	ØB	F
	100.00	113.00	13.50

100.00

Part No	RUA 1000 1150 115		
Groove Dimension	ØA	ØB	F
	100.00	115.00	11.50

100.00

Part No	RUA 1000 1150 130		
Groove Dimension	ØA	ØB	F
	100.00	115.00	13.00

100.00

Part No	RUA 1000 1200 130		
Groove Dimension	ØA	ØB	F
	100.00	120.00	13.00

100.00

Part No	RUA 1000 1200 145		
Groove Dimension	ØA	ØB	F
	100.00	120.00	14.50

100.00

Part No	RUA 1000 1200 160		
Groove Dimension	ØA	ØB	F
	100.00	120.00	16.00

100.00

Part No	RUA 1000 1250 200		
Groove Dimension	ØA	ØB	F
	100.00	125.00	20.00

105.00

Part No	RUA 1050 1150 110		
Groove Dimension	ØA	ØB	F
	105.00	115.00	11.00

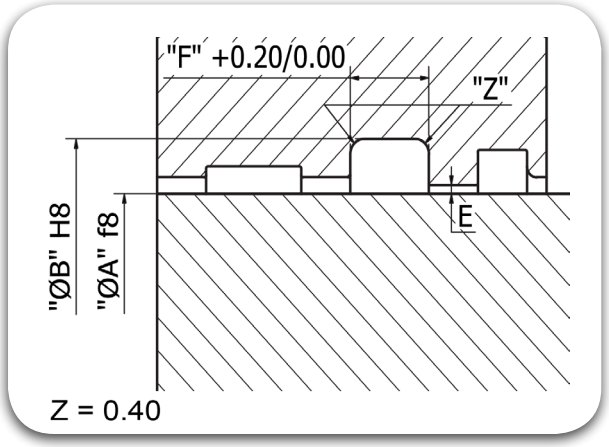

105.00

Part No	RUA 1050 1150 125		
Groove Dimension	ØA	ØB	F
	105.00	115.00	12.50

105.00

Part No	RUA 1050 1150 130		
Groove Dimension	ØA	ØB	F
	105.00	115.00	13.00

105.00

Part No	RUA 1050 1150 145		
Groove Dimension	ØA	ØB	F
	105.00	115.00	14.50

105.00

Part No	RUA 1050 1250 130		
Groove Dimension	ØA	ØB	F
	105.00	125.00	13.00

105.00

Part No	RUA 1050 1250 160		
Groove Dimension	ØA	ØB	F
	105.00	125.00	16.00

110.00

Part No	RUA 1100 1250 120		
Groove Dimension	ØA	ØB	F
	110.00	125.00	12.00

110.00

Part No	RUA 1100 1250 160		
Groove Dimension	ØA	ØB	F
	110.00	125.00	16.00

110.00

Part No	RUA 1100 1300 130		
Groove Dimension	ØA	ØB	F
	110.00	130.00	13.00

110.00

Part No	RUA 1100 1300 160		
Groove Dimension	ØA	ØB	F
	110.00	130.00	16.00

115.00

Part No	RUA 1150 1300 120		
Groove Dimension	ØA	ØB	F
	115.00	130.00	12.00

120.00

Part No	RUA 1200 1350 125		
Groove Dimension	ØA	ØB	F
	120.00	135.00	12.50

120.00

Part No	RUA 1200 1350 160		
Groove Dimension	ØA	ØB	F
	120.00	135.00	16.00

120.00

Part No	RUA 1200 1400 160		
Groove Dimension	ØA	ØB	F
	120.00	140.00	16.00

125.00

Part No	RUA 1250 1450 160		
Groove Dimension	ØA	ØB	F
	125.00	145.00	16.00

130.00

Part No	RUA 1300 1500 130		
Groove Dimension	ØA	ØB	F
	130.00	150.00	13.00

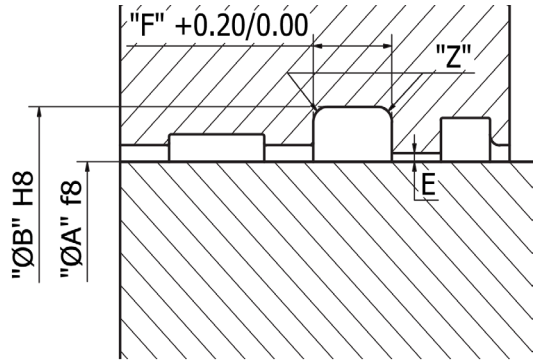

130.00

Part No	RUA 1300 1500 160		
Groove Dimension	ØA	ØB	F
	130.00	150.00	16.00

140.00

Part No	RUA 1400 1600 160		
Groove Dimension	ØA	ØB	F
	140.00	160.00	16.00

150.00

Part No	RUA 1500 1700 160		
Groove Dimension	ØA	ØB	F
	150.00	170.00	16.00

160.00

Part No	RUA 1600 1800 130		
Groove Dimension	ØA	ØB	F
	160.00	180.00	13.00

160.00

Part No	RUA 1600 1800 160		
Groove Dimension	ØA	ØB	F
	160.00	180.00	16.00

170.00

Part No	RUA 1700 1900 160		
Groove Dimension	ØA	ØB	F
	170.00	190.00	16.00

180.00

Part No	RUA 1800 2000 160		
Groove Dimension	ØA	ØB	F
	180.00	200.00	16.00

190.00

Part No	RUA 1900 2100 160		
Groove Dimension	ØA	ØB	F
	190.00	210.00	16.00

200.00

Part No	RUA 2000 2120 160		
Groove Dimension	ØA	ØB	F
	200.00	212.00	16.00

200.00

Part No	RUA 2000 2200 160		
Groove Dimension	ØA	ØB	F
	200.00	220.00	16.00

200.00

Part No	RUA 2000 2250 170		
Groove Dimension	ØA	ØB	F
	200.00	225.00	17.00

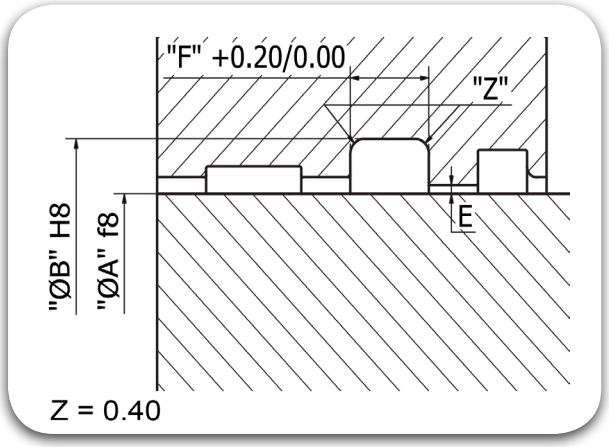

210.00

Part No	RUA 2100 2300 130
Groove Dimension	ØA 210.00 x ØB 230.00 x F 13.00

210.00

Part No	RUA 2100 2300 160
Groove Dimension	ØA 210.00 x ØB 230.00 x F 16.00

220.00

Part No	RUA 2200 2400 160
Groove Dimension	ØA 220.00 x ØB 240.00 x F 16.00

230.00

Part No	RUA 2300 2500 160
Groove Dimension	ØA 230.00 x ØB 250.00 x F 16.00

240.00

Part No	RUA 2400 2600 160
Groove Dimension	ØA 240.00 x ØB 260.00 x F 16.00

250.00

Part No	RUA 2500 2700 160
Groove Dimension	ØA 250.00 x ØB 270.00 x F 16.00

Rod Seals

RUB

TRIADA
TECHNOLOGIES

#SealingExcellence




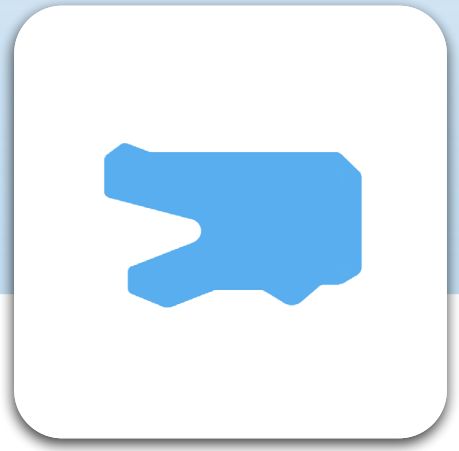

Description

The RUB type Seal is similar to the RUA type, but on the dynamic side, it presents a multifunctional Secondary lip which:

- Reduces the stick-slip effect by maintaining a thin film of oil between the Secondary lip and the Primary Lip.
- Creates a barrier for any external impurities, which has managed to pass through the Wiper Lips, from entering into the system
- Compensates for the material shrinkage at very low temperatures.
- Functions as a stabilizer, particularly during spike pressures.



Diameter Range	Ø6.00 – Ø3500.00
Standard material	TRIATHANE® T479(Polyurathane)
Temperature(°C)	-35° C to 110° C
Speed	≤ 0.50 m/s
Fluids	Hydraulic fluids (Mineral Oil based) depending on Seal Compounds selected.
Pressure	≤ 400 bar

Material Details

Seal Material	Seal Material Code
TRIATHANE® Polyurethane	T479

Nomenclature

Part No	RUB	1000	1200	130	T479
	Seal profile	Rod Dia x 10	Groove Dia x 10	Groove Width x 10	Seal Material Code

Groove Details

Operating Pressure (Bar)	Radial Clearance "E" max	
	ØA < 60mm	ØA > 60mm
50	0.40	0.50
100	0.30	0.40
200	0.20	0.30
300	0.15	0.20
400	0.10	0.15

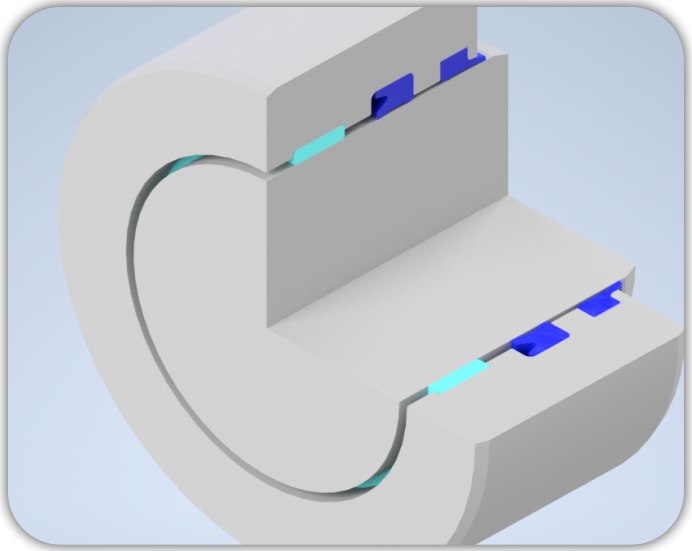

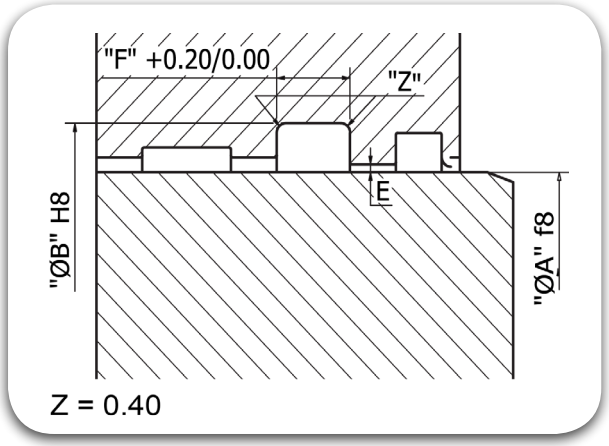

6.00

Part No	RUB 0060 0140 063				
Groove Dimension	ØA	x	ØB	x	F
	6.00		14.00		6.30

8.00

Part No	RUB 0080 0160 063				
Groove Dimension	ØA	x	ØB	x	F
	8.00		16.00		6.30

10.00

Part No	RUB 0100 0180 063				
Groove Dimension	ØA	x	ØB	x	F
	10.00		18.00		6.30

10.00

Part No	RUB 0100 0200 080				
Groove Dimension	ØA	x	ØB	x	F
	10.00		20.00		8.00

12.00

Part No	RUB 0120 0190 056				
Groove Dimension	ØA	x	ØB	x	F
	12.00		19.00		5.60

12.00

Part No	RUB 0120 0200 063				
Groove Dimension	ØA	x	ØB	x	F
	12.00		20.00		6.30

12.00

Part No	RUB 0120 0220 080				
Groove Dimension	ØA	x	ØB	x	F
	12.00		22.00		8.00

12.00

Part No	RUB 0120 0220 090				
Groove Dimension	ØA	x	ØB	x	F
	12.00		22.00		9.00

14.00

Part No	RUB 0140 0200 063				
Groove Dimension	ØA	x	ØB	x	F
	14.00		20.00		6.30

14.00

Part No	RUB 0140 0210 056				
Groove Dimension	ØA	x	ØB	x	F
	14.00		21.00		5.60

14.00

Part No	RUB 0140 0220 063				
Groove Dimension	ØA	x	ØB	x	F
	14.00		22.00		6.30

14.00

Part No	RUB 0140 0240 080				
Groove Dimension	ØA	x	ØB	x	F
	14.00		24.00		8.00

15.00

Part No	RUB 0150 0230 063				
Groove Dimension	ØA	x	ØB	x	F
	15.00		23.00		6.30

16.00

Part No	RUB 0160 0240 063		
Groove Dimension	ØA	ØB	F
	16.00	24.00	6.30

16.00

Part No	RUB 0160 0260 080		
Groove Dimension	ØA	ØB	F
	16.00	26.00	8.00

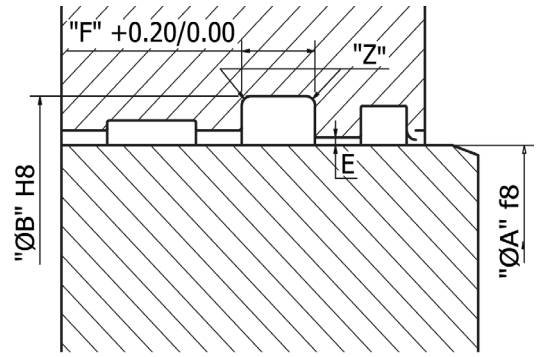

18.00

Part No	RUB 0180 0250 056		
Groove Dimension	ØA	ØB	F
	18.00	25.00	5.60

18.00

Part No	RUB 0180 0260 063		
Groove Dimension	ØA	ØB	F
	18.00	26.00	6.30

18.00

Part No	RUB 0180 0280 080		
Groove Dimension	ØA	ØB	F
	18.00	28.00	8.00

20.00

Part No	RUB 0200 0280 050		
Groove Dimension	ØA	ØB	F
	20.00	28.00	5.00

20.00

Part No	RUB 0200 0280 063		
Groove Dimension	ØA	ØB	F
	20.00	28.00	6.30

20.00

Part No	RUB 0200 0300 080		
Groove Dimension	ØA	ØB	F
	20.00	30.00	8.00

22.00

Part No	RUB 0220 0290 056		
Groove Dimension	ØA	ØB	F
	22.00	29.00	5.60

22.00

Part No	RUB 0220 0300 060		
Groove Dimension	ØA	ØB	F
	22.00	30.00	6.00

22.00

Part No	RUB 0220 0320 080		
Groove Dimension	ØA	ØB	F
	22.00	32.00	8.00

25.00

Part No	RUB 0250 0330 063		
Groove Dimension	ØA	ØB	F
	25.00	33.00	6.30

25.00

Part No	RUB 0250 0330 080		
Groove Dimension	ØA	ØB	F
	25.00	33.00	8.00

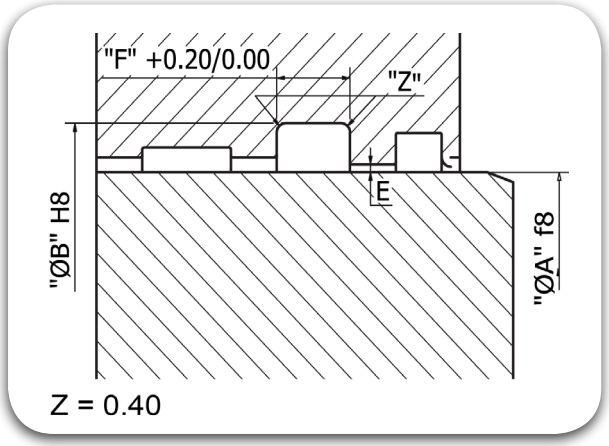

25.00

Part No	RUB 0250 0350 080					
Groove Dimension	ØA	x	ØB	x	F	
	25.00		35.00		8.00	

28.00

Part No	RUB 0280 0360 063					
Groove Dimension	ØA	x	ØB	x	F	
	28.00		36.00		6.30	

28.00

Part No	RUB 0280 0360 080					
Groove Dimension	ØA	x	ØB	x	F	
	28.00		36.00		8.00	

28.00

Part No	RUB 0280 0380 063					
Groove Dimension	ØA	x	ØB	x	F	
	28.00		38.00		6.30	

28.00

Part No	RUB 0280 0380 080					
Groove Dimension	ØA	x	ØB	x	F	
	28.00		38.00		8.00	

28.00

Part No	RUB 0280 0380 090					
Groove Dimension	ØA	x	ØB	x	F	
	28.00		38.00		9.00	

28.00

Part No	RUB 0280 0430 125					
Groove Dimension	ØA	x	ØB	x	F	
	28.00		43.00		12.50	

30.00

Part No	RUB 0300 0380 063					
Groove Dimension	ØA	x	ØB	x	F	
	30.00		38.00		6.30	

30.00

Part No	RUB 0300 0400 070					
Groove Dimension	ØA	x	ØB	x	F	
	30.00		40.00		7.00	

30.00

Part No	RUB 0300 0400 080					
Groove Dimension	ØA	x	ØB	x	F	
	30.00		40.00		8.00	

30.00

Part No	RUB 0300 0400 090					
Groove Dimension	ØA	x	ØB	x	F	
	30.00		40.00		9.00	

32.00

Part No	RUB 0320 0400 063					
Groove Dimension	ØA	x	ØB	x	F	
	32.00		40.00		6.30	

32.00

Part No	RUB 0320 0400 070					
Groove Dimension	ØA	x	ØB	x	F	
	32.00		40.00		7.00	

32.00

Part No	RUB 0320 0400 077		
Groove Dimension	ØA	ØB	F
	32.00	40.00	7.70

32.00

Part No	RUB 0320 0420 063		
Groove Dimension	ØA	ØB	F
	32.00	42.00	6.30

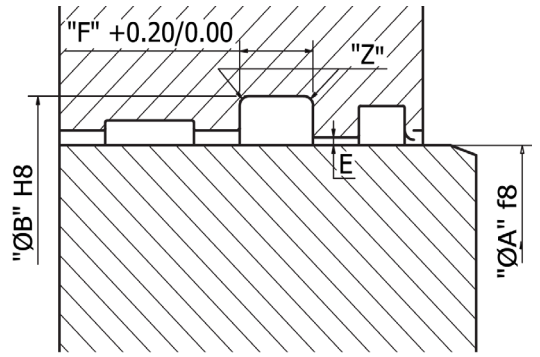

32.00

Part No	RUB 0320 0420 080		
Groove Dimension	ØA	ØB	F
	32.00	42.00	8.00

35.00

Part No	RUB 0350 0420 080		
Groove Dimension	ØA	ØB	F
	35.00	42.00	8.00

35.00

Part No	RUB 0350 0430 063		
Groove Dimension	ØA	ØB	F
	35.00	43.00	6.30

35.00

Part No	RUB 0350 0430 070		
Groove Dimension	ØA	ØB	F
	35.00	43.00	7.00

35.00

Part No	RUB 0350 0450 070		
Groove Dimension	ØA	ØB	F
	35.00	45.00	7.00

35.00

Part No	RUB 0350 0450 077		
Groove Dimension	ØA	ØB	F
	35.00	45.00	7.70

35.00

Part No	RUB 0350 0450 080		
Groove Dimension	ØA	ØB	F
	35.00	45.00	8.00

35.00

Part No	RUB 0350 0450 080		
Groove Dimension	ØA	ØB	F
	35.00	45.00	8.00

35.00

Part No	RUB 0350 0450 130		
Groove Dimension	ØA	ØB	F
	35.00	45.00	13.00

35.00

Part No	RUB 0350 0500 100		
Groove Dimension	ØA	ØB	F
	35.00	50.00	10.00

36.00

Part No	RUB 0360 0440 063		
Groove Dimension	ØA	ØB	F
	36.00	44.00	6.30

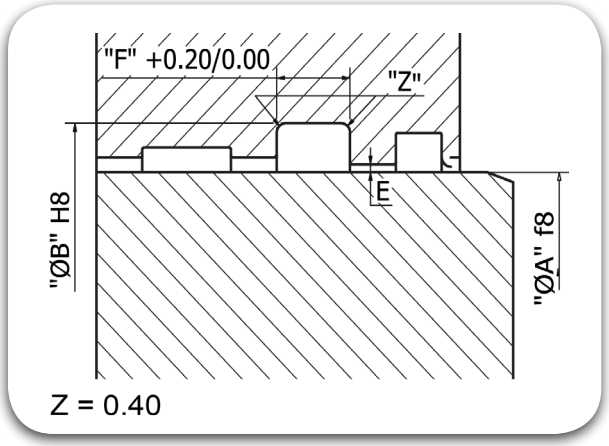

36.00

Part No	RUB 0360 0440 070					
Groove Dimension	ØA	x	ØB	x	F	
	36.00		44.00		7.00	

36.00

Part No	RUB 0360 0460 080					
Groove Dimension	ØA	x	ØB	x	F	
	36.00		46.00		8.00	

36.00

Part No	RUB 0360 0460 080					
Groove Dimension	ØA	x	ØB	x	F	
	36.00		46.00		8.00	

36.00

Part No	RUB 0360 0460 090					
Groove Dimension	ØA	x	ØB	x	F	
	36.00		46.00		9.00	

38.00

Part No	RUB 0380 0480 090					
Groove Dimension	ØA	x	ØB	x	F	
	38.00		48.00		9.00	

40.00

Part No	RUB 0400 0480 063					
Groove Dimension	ØA	x	ØB	x	F	
	40.00		48.00		6.30	

40.00

Part No	RUB 0400 0500 070					
Groove Dimension	ØA	x	ØB	x	F	
	40.00		50.00		7.00	

40.00

Part No	RUB 0400 0500 080					
Groove Dimension	ØA	x	ØB	x	F	
	40.00		50.00		8.00	

40.00

Part No	RUB 0400 0500 080					
Groove Dimension	ØA	x	ØB	x	F	
	40.00		50.00		8.00	

40.00

Part No	RUB 0400 0500 110					
Groove Dimension	ØA	x	ØB	x	F	
	40.00		50.00		11.00	

40.00

Part No	RUB 0400 0550 110					
Groove Dimension	ØA	x	ØB	x	F	
	40.00		55.00		11.00	

40.00

Part No	RUB 0400 0550 125					
Groove Dimension	ØA	x	ØB	x	F	
	40.00		55.00		12.50	

40.00

Part No	RUB 0400 0550 100					
Groove Dimension	ØA	x	ØB	x	F	
	40.00		55.00		10.00	

42.00

Part No	RUB 0420 0500 090					
Groove Dimension	ØA	x	ØB	x	F	
	42.00		50.00		9.00	

42.00

Part No	RUB 0420 0500 125					
Groove Dimension	ØA	x	ØB	x	F	
	42.00		50.00		12.50	

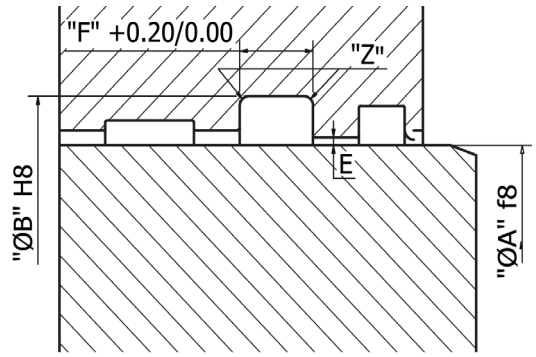

42.00

Part No	RUB 0420 0530 100					
Groove Dimension	ØA	x	ØB	x	F	
	42.00		53.00		10.00	

45.00

Part No	RUB 0450 0530 063					
Groove Dimension	ØA	x	ØB	x	F	
	45.00		53.00		6.30	

45.00

Part No	RUB 0450 0530 110					
Groove Dimension	ØA	x	ØB	x	F	
	45.00		53.00		11.00	

45.00

Part No	RUB 0450 0530 125					
Groove Dimension	ØA	x	ØB	x	F	
	45.00		53.00		12.50	

45.00

Part No	RUB 0450 0550 063					
Groove Dimension	ØA	x	ØB	x	F	
	45.00		55.00		6.30	

45.00

Part No	RUB 0450 0550 070					
Groove Dimension	ØA	x	ØB	x	F	
	45.00		55.00		7.00	

45.00

Part No	RUB 0450 0550 080					
Groove Dimension	ØA	x	ØB	x	F	
	45.00		55.00		8.00	

45.00

Part No	RUB 0450 0550 125					
Groove Dimension	ØA	x	ØB	x	F	
	45.00		55.00		12.50	

45.00

Part No	RUB 0450 0600 125					
Groove Dimension	ØA	x	ØB	x	F	
	45.00		60.00		12.50	

46.00

Part No	RUB 0460 0560 110					
Groove Dimension	ØA	x	ØB	x	F	
	46.00		56.00		11.00	

48.00

Part No	RUB 0480 0560 125					
Groove Dimension	ØA	x	ØB	x	F	
	48.00		56.00		12.50	

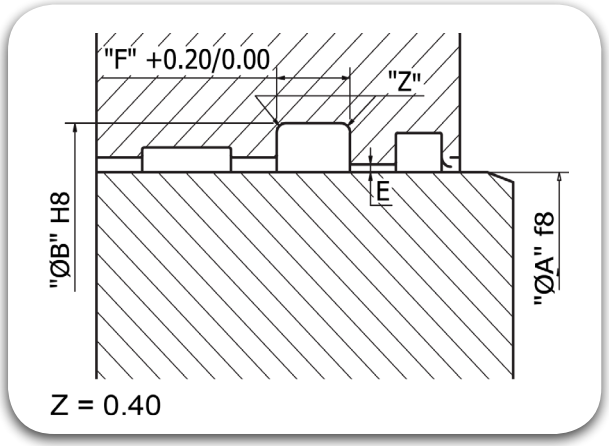

48.00

Part No	RUB 0480 0560 130					
Groove Dimension	ØA	x	ØB	x	F	
	48.00		56.00		13.00	

50.00

Part No	RUB 0500 0570 080					
Groove Dimension	ØA	x	ØB	x	F	
	50.00		57.00		8.00	

50.00

Part No	RUB 0500 0570 110					
Groove Dimension	ØA	x	ØB	x	F	
	50.00		57.00		11.00	

50.00

Part No	RUB 0500 0580 125					
Groove Dimension	ØA	x	ØB	x	F	
	50.00		58.00		12.50	

50.00

Part No	RUB 0500 0590 110					
Groove Dimension	ØA	x	ØB	x	F	
	50.00		59.00		11.00	

50.00

Part No	RUB 0500 0600 070					
Groove Dimension	ØA	x	ØB	x	F	
	50.00		60.00		7.00	

50.00

Part No	RUB 0500 0600 080					
Groove Dimension	ØA	x	ØB	x	F	
	50.00		60.00		8.00	

50.00

Part No	RUB 0500 0600 110					
Groove Dimension	ØA	x	ØB	x	F	
	50.00		60.00		11.00	

50.00

Part No	RUB 0500 0650 100					
Groove Dimension	ØA	x	ØB	x	F	
	50.00		65.00		10.00	

50.00

Part No	RUB 0500 0650 110					
Groove Dimension	ØA	x	ØB	x	F	
	50.00		65.00		11.00	

50.00

Part No	RUB 0500 0650 125					
Groove Dimension	ØA	x	ØB	x	F	
	50.00		65.00		12.50	

50.00

Part No	RUB 0500 0700 110					
Groove Dimension	ØA	x	ØB	x	F	
	50.00		70.00		11.00	

50.00

Part No	RUB 0500 0700 130					
Groove Dimension	ØA	x	ØB	x	F	
	50.00		70.00		13.00	

55.00

Part No	RUB 0550 0630 125					
Groove Dimension	ØA	x	ØB	x	F	
	55.00		63.00		12.50	

55.00

Part No	RUB 0550 0650 070					
Groove Dimension	ØA	x	ØB	x	F	
	55.00		65.00		7.00	

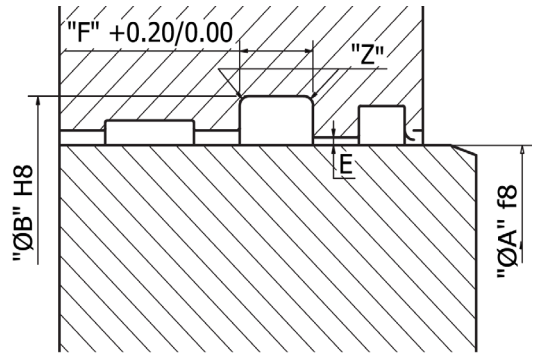

55.00

Part No	RUB 0550 0650 080					
Groove Dimension	ØA	x	ØB	x	F	
	55.00		65.00		8.00	

55.00

Part No	RUB 0550 0650 095					
Groove Dimension	ØA	x	ØB	x	F	
	55.00		65.00		9.50	

55.00

Part No	RUB 0550 0650 110					
Groove Dimension	ØA	x	ØB	x	F	
	55.00		65.00		11.00	

55.00

Part No	RUB 0550 0680 110					
Groove Dimension	ØA	x	ØB	x	F	
	55.00		68.00		11.00	

55.00

Part No	RUB 0550 0700 100					
Groove Dimension	ØA	x	ØB	x	F	
	55.00		70.00		10.00	

55.00

Part No	RUB 0550 0750 130					
Groove Dimension	ØA	x	ØB	x	F	
	55.00		75.00		13.00	

56.00

Part No	RUB 0560 0660 070					
Groove Dimension	ØA	x	ØB	x	F	
	56.00		66.00		7.00	

56.00

Part No	RUB 0560 0710 100					
Groove Dimension	ØA	x	ØB	x	F	
	56.00		71.00		10.00	

56.00

Part No	RUB 0560 0710 110					
Groove Dimension	ØA	x	ØB	x	F	
	56.00		71.00		11.00	

56.00

Part No	RUB 0560 0710 125					
Groove Dimension	ØA	x	ØB	x	F	
	56.00		71.00		12.50	

56.00

Part No	RUB 0560 0760 160					
Groove Dimension	ØA	x	ØB	x	F	
	56.00		76.00		16.00	

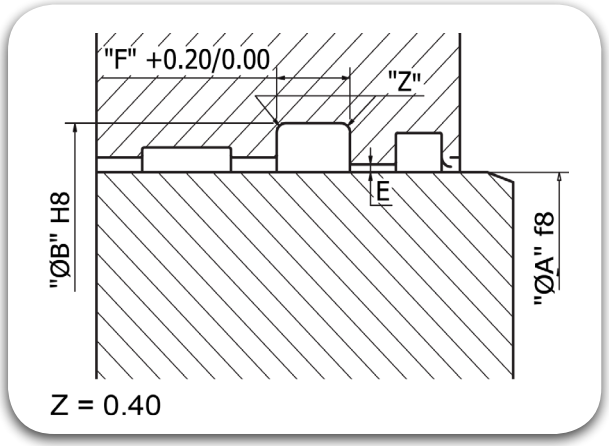

60.00

Part No	RUB 0600 0680 125					
Groove Dimension	ØA	x	ØB	x	F	
	60.00		68.00		12.50	

60.00

Part No	RUB 0600 0700 070					
Groove Dimension	ØA	x	ØB	x	F	
	60.00		70.00		7.00	

60.00

Part No	RUB 0600 0700 080					
Groove Dimension	ØA	x	ØB	x	F	
	60.00		70.00		8.00	

60.00

Part No	RUB 0600 0700 110					
Groove Dimension	ØA	x	ØB	x	F	
	60.00		70.00		11.00	

60.00

Part No	RUB 0600 0700 125					
Groove Dimension	ØA	x	ØB	x	F	
	60.00		70.00		12.50	

60.00

Part No	RUB 0600 0730 110					
Groove Dimension	ØA	x	ØB	x	F	
	60.00		73.00		11.00	

60.00

Part No	RUB 0600 0750 100					
Groove Dimension	ØA	x	ØB	x	F	
	60.00		75.00		10.00	

60.00

Part No	RUB 0600 0750 110					
Groove Dimension	ØA	x	ØB	x	F	
	60.00		75.00		11.00	

60.00

Part No	RUB 0600 0750 125					
Groove Dimension	ØA	x	ØB	x	F	
	60.00		75.00		12.50	

60.00

Part No	RUB 0600 0800 130					
Groove Dimension	ØA	x	ØB	x	F	
	60.00		80.00		13.00	

63.00

Part No	RUB 0630 0730 070					
Groove Dimension	ØA	x	ØB	x	F	
	63.00		73.00		7.00	

63.00

Part No	RUB 0630 0780 110					
Groove Dimension	ØA	x	ØB	x	F	
	63.00		78.00		11.00	

63.00

Part No	RUB 0630 0780 125					
Groove Dimension	ØA	x	ØB	x	F	
	63.00		78.00		12.50	

63.00

Part No	RUB 0630 0830 130					
Groove Dimension	ØA	x	ØB	x	F	
	63.00		83.00		13.00	

63.00

Part No	RUB 0630 0830 160					
Groove Dimension	ØA	x	ØB	x	F	
	63.00		83.00		16.00	

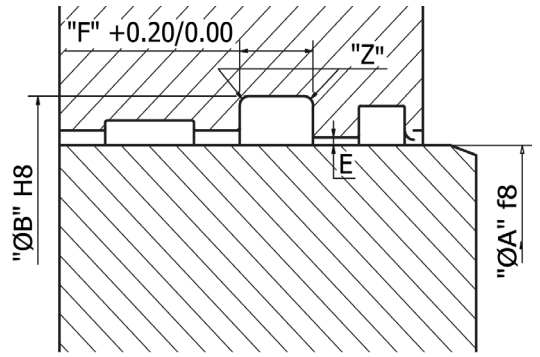

65.00

Part No	RUB 0650 0730 125					
Groove Dimension	ØA	x	ØB	x	F	
	65.00		73.00		12.50	

65.00

Part No	RUB 0650 0750 070					
Groove Dimension	ØA	x	ØB	x	F	
	65.00		75.00		7.00	

65.00

Part No	RUB 0650 0750 080					
Groove Dimension	ØA	x	ØB	x	F	
	65.00		75.00		8.00	

65.00

Part No	RUB 0650 0750 080					
Groove Dimension	ØA	x	ØB	x	F	
	65.00		75.00		8.00	

65.00

Part No	RUB 0650 0750 110					
Groove Dimension	ØA	x	ØB	x	F	
	65.00		75.00		11.00	

65.00

Part No	RUB 0650 0750 130					
Groove Dimension	ØA	x	ØB	x	F	
	65.00		75.00		13.00	

65.00

Part No	RUB 0650 0780 110					
Groove Dimension	ØA	x	ØB	x	F	
	65.00		78.00		11.00	

65.00

Part No	RUB 0650 0800 100					
Groove Dimension	ØA	x	ØB	x	F	
	65.00		80.00		10.00	

65.00

Part No	RUB 0650 0800 125					
Groove Dimension	ØA	x	ØB	x	F	
	65.00		80.00		12.50	

65.00

Part No	RUB 0650 0850 130					
Groove Dimension	ØA	x	ØB	x	F	
	65.00		85.00		13.00	

67.00

Part No	RUB 0670 0750 125					
Groove Dimension	ØA	x	ØB	x	F	
	67.00		75.00		12.50	

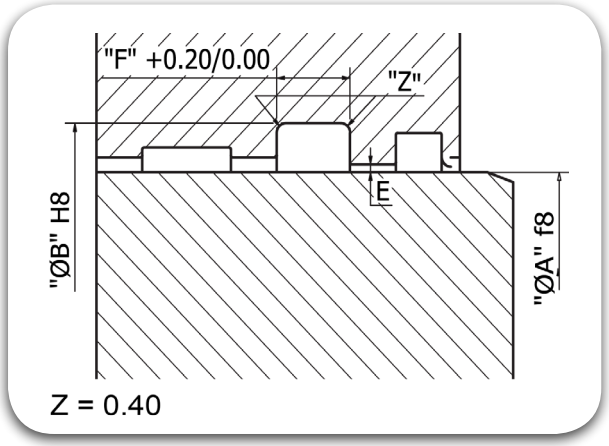

67.00

Part No	RUB 0670 0770 070					
Groove Dimension	ØA	x	ØB	x	F	
	67.00		77.00		7.00	

70.00

Part No	RUB 0700 0780 125					
Groove Dimension	ØA	x	ØB	x	F	
	70.00		78.00		12.50	

70.00

Part No	RUB 0700 0800 070					
Groove Dimension	ØA	x	ØB	x	F	
	70.00		80.00		7.00	

70.00

Part No	RUB 0700 0800 080					
Groove Dimension	ØA	x	ØB	x	F	
	70.00		80.00		8.00	

70.00

Part No	RUB 0700 0800 125					
Groove Dimension	ØA	x	ØB	x	F	
	70.00		80.00		12.50	

70.00

Part No	RUB 0700 0830 110					
Groove Dimension	ØA	x	ØB	x	F	
	70.00		83.00		11.00	

70.00

Part No	RUB 0700 0850 100					
Groove Dimension	ØA	x	ØB	x	F	
	70.00		85.00		10.00	

70.00

Part No	RUB 0700 0850 110					
Groove Dimension	ØA	x	ØB	x	F	
	70.00		85.00		11.00	

70.00

Part No	RUB 0700 0850 125					
Groove Dimension	ØA	x	ØB	x	F	
	70.00		85.00		12.50	

70.00

Part No	RUB 0700 0900 130					
Groove Dimension	ØA	x	ØB	x	F	
	70.00		90.00		13.00	

70.00

Part No	RUB 0700 0900 160					
Groove Dimension	ØA	x	ØB	x	F	
	70.00		90.00		16.00	

71.00

Part No	RUB 0710 0810 110					
Groove Dimension	ØA	x	ØB	x	F	
	71.00		81.00		11.00	

71.00

Part No	RUB 0710 0810 090					
Groove Dimension	ØA	x	ØB	x	F	
	71.00		81.00		9.00	

75.00

Part No	RUB 0750 0830 080					
Groove Dimension	ØA	x	ØB	x	F	
	75.00		83.00		8.00	

75.00

Part No	RUB 0750 0830 125					
Groove Dimension	ØA	x	ØB	x	F	
	75.00		83.00		12.50	

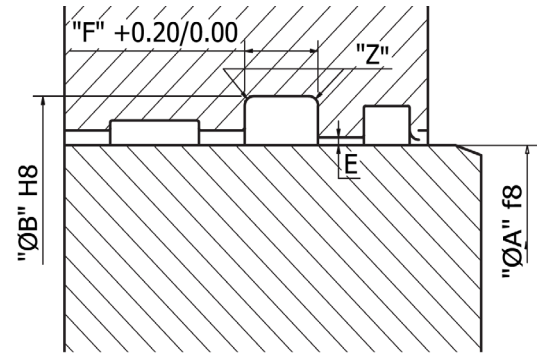

75.00

Part No	RUB 0750 0850 070					
Groove Dimension	ØA	x	ØB	x	F	
	75.00		85.00		7.00	

75.00

Part No	RUB 0750 0850 110					
Groove Dimension	ØA	x	ØB	x	F	
	75.00		85.00		11.00	

75.00

Part No	RUB 0750 0850 125					
Groove Dimension	ØA	x	ØB	x	F	
	75.00		85.00		12.50	

75.00

Part No	RUB 0750 0880 110					
Groove Dimension	ØA	x	ØB	x	F	
	75.00		88.00		11.00	

75.00

Part No	RUB 0750 0900 100					
Groove Dimension	ØA	x	ØB	x	F	
	75.00		90.00		10.00	

75.00

Part No	RUB 0750 0900 125					
Groove Dimension	ØA	x	ØB	x	F	
	75.00		90.00		12.50	

75.00

Part No	RUB 0750 0950 130					
Groove Dimension	ØA	x	ØB	x	F	
	75.00		95.00		13.00	

78.00

Part No	RUB 0780 0860 125					
Groove Dimension	ØA	x	ØB	x	F	
	78.00		86.00		12.50	

80.00

Part No	RUB 0800 0880 125					
Groove Dimension	ØA	x	ØB	x	F	
	80.00		88.00		12.50	

80.00

Part No	RUB 0800 0900 070					
Groove Dimension	ØA	x	ØB	x	F	
	80.00		90.00		7.00	

80.00

Part No	RUB 0800 0900 080					
Groove Dimension	ØA	x	ØB	x	F	
	80.00		90.00		8.00	

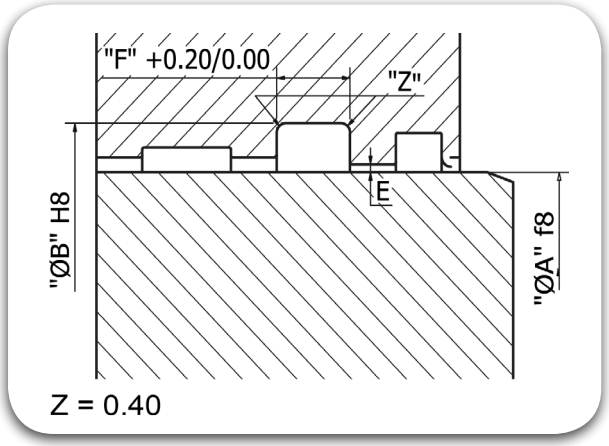

80.00

Part No	RUB 0800 0900 110		
Groove Dimension	ØA	ØB	F
	80.00	90.00	11.00

80.00

Part No	RUB 0800 0930 110		
Groove Dimension	ØA	ØB	F
	80.00	93.00	11.00

80.00

Part No	RUB 0800 0950 100		
Groove Dimension	ØA	ØB	F
	80.00	95.00	10.00

80.00

Part No	RUB 0800 0950 110		
Groove Dimension	ØA	ØB	F
	80.00	95.00	11.00

80.00

Part No	RUB 0800 0950 125		
Groove Dimension	ØA	ØB	F
	80.00	95.00	12.50

80.00

Part No	RUB 0800 1000 130		
Groove Dimension	ØA	ØB	F
	80.00	100.00	13.00

80.00

Part No	RUB 0800 1000 160		
Groove Dimension	ØA	ØB	F
	80.00	100.00	16.00

85.00

Part No	RUB 0850 0930 125		
Groove Dimension	ØA	ØB	F
	85.00	93.00	12.50

85.00

Part No	RUB 0850 1000 100		
Groove Dimension	ØA	ØB	F
	85.00	100.00	10.00

85.00

Part No	RUB 0850 1000 110		
Groove Dimension	ØA	ØB	F
	85.00	100.00	11.00

85.00

Part No	RUB 0850 1000 125		
Groove Dimension	ØA	ØB	F
	85.00	100.00	12.50

85.00

Part No	RUB 0850 1050 130		
Groove Dimension	ØA	ØB	F
	85.00	105.00	13.00

90.00

Part No	RUB 0900 0980 125		
Groove Dimension	ØA	ØB	F
	90.00	98.00	12.50

90.00

Part No	RUB 0900 1000 080
Groove Dimension	ØA 90.00 x ØB 100.00 x F 8.00

90.00

Part No	RUB 0900 1000 125
Groove Dimension	ØA 90.00 x ØB 100.00 x F 12.50

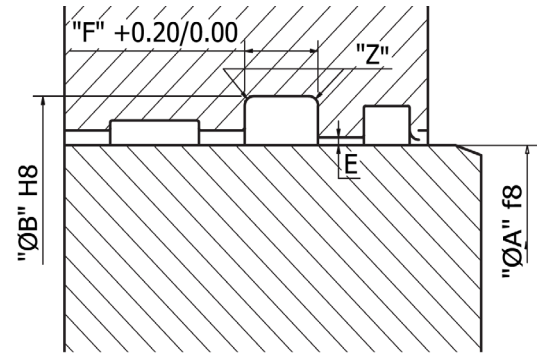

90.00

Part No	RUB 0900 1050 100
Groove Dimension	ØA 90.00 x ØB 105.00 x F 10.00

90.00

Part No	RUB 0900 1050 110
Groove Dimension	ØA 90.00 x ØB 105.00 x F 11.00

90.00

Part No	RUB 0900 1050 125
Groove Dimension	ØA 90.00 x ØB 105.00 x F 12.50

90.00

Part No	RUB 0900 1100 130
Groove Dimension	ØA 90.00 x ØB 110.00 x F 13.00

90.00

Part No	RUB 0900 1100 160
Groove Dimension	ØA 90.00 x ØB 110.00 x F 16.00

93.00

Part No	RUB 0930 1010 125
Groove Dimension	ØA 93.00 x ØB 101.00 x F 12.50

95.00

Part No	RUB 0950 1030 125
Groove Dimension	ØA 95.00 x ØB 103.00 x F 12.50

95.00

Part No	RUB 0950 1050 130
Groove Dimension	ØA 95.00 x ØB 105.00 x F 13.00

95.00

Part No	RUB 0950 1100 100
Groove Dimension	ØA 95.00 x ØB 110.00 x F 10.00

95.00

Part No	RUB 0950 1100 110
Groove Dimension	ØA 95.00 x ØB 110.00 x F 11.00

95.00

Part No	RUB 0950 1150 130
Groove Dimension	ØA 95.00 x ØB 115.00 x F 13.00

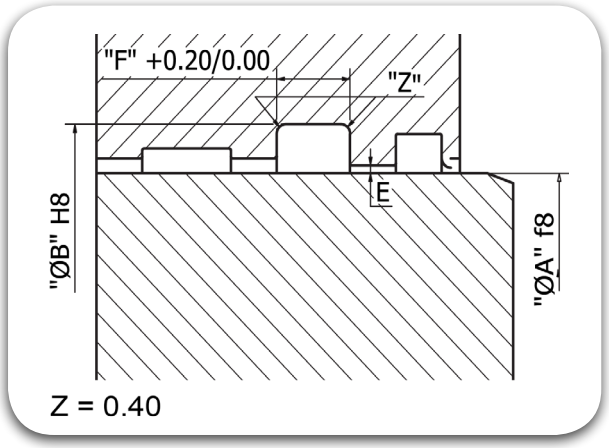

95.00

Part No	RUB 0950 1150 145				
Groove Dimension	ØA	x	ØB	x	F
	95.00		115.00		14.50

97.00

Part No	RUB 0970 1050 125				
Groove Dimension	ØA	x	ØB	x	F
	97.00		105.00		12.50

100.00

Part No	RUB 1000 1080 125				
Groove Dimension	ØA	x	ØB	x	F
	100.00		108.00		12.50

100.00

Part No	RUB 1000 1150 100				
Groove Dimension	ØA	x	ØB	x	F
	100.00		115.00		10.00

100.00

Part No	RUB 1000 1150 110				
Groove Dimension	ØA	x	ØB	x	F
	100.00		115.00		11.00

100.00

Part No	RUB 1000 1200 130				
Groove Dimension	ØA	x	ØB	x	F
	100.00		120.00		13.00

100.00

Part No	RUB 1000 1200 130				
Groove Dimension	ØA	x	ØB	x	F
	100.00		120.00		13.00

100.00

Part No	RUB 1000 1200 160				
Groove Dimension	ØA	x	ØB	x	F
	100.00		120.00		16.00

105.00

Part No	RUB 1050 1130 125				
Groove Dimension	ØA	x	ØB	x	F
	105.00		113.00		12.50

105.00

Part No	RUB 1050 1150 125				
Groove Dimension	ØA	x	ØB	x	F
	105.00		115.00		12.50

105.00

Part No	RUB 1050 1200 100				
Groove Dimension	ØA	x	ØB	x	F
	105.00		120.00		10.00

105.00

Part No	RUB 1050 1200 110				
Groove Dimension	ØA	x	ØB	x	F
	105.00		120.00		11.00

105.00

Part No	RUB 1050 1250 130				
Groove Dimension	ØA	x	ØB	x	F
	105.00		125.00		13.00

106.00

Part No	RUB 1060 1210 100		
Groove Dimension	ØA	ØB	F
	106.00	121.00	10.00

106.00

Part No	RUB 1060 1210 110		
Groove Dimension	ØA	ØB	F
	106.00	121.00	11.00

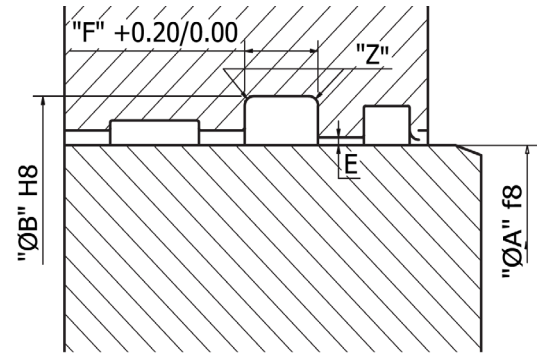

110.00

Part No	RUB 1100 1180 125		
Groove Dimension	ØA	ØB	F
	110.00	118.00	12.50

110.00

Part No	RUB 1100 1250 100		
Groove Dimension	ØA	ØB	F
	110.00	125.00	10.00

110.00

Part No	RUB 1100 1250 106		
Groove Dimension	ØA	ØB	F
	110.00	125.00	10.60

110.00

Part No	RUB 1100 1250 110		
Groove Dimension	ØA	ØB	F
	110.00	125.00	11.00

110.00

Part No	RUB 1100 1300 110		
Groove Dimension	ØA	ØB	F
	110.00	130.00	11.00

110.00

Part No	RUB 1100 1300 130		
Groove Dimension	ØA	ØB	F
	110.00	130.00	13.00

110.00

Part No	RUB 1100 1300 160		
Groove Dimension	ØA	ØB	F
	110.00	130.00	16.00

110.00

Part No	RUB 1100 1350 200		
Groove Dimension	ØA	ØB	F
	110.00	135.00	20.00

112.00

Part No	RUB 1120 1270 100		
Groove Dimension	ØA	ØB	F
	112.00	127.00	10.00

112.00

Part No	RUB 1120 1270 110		
Groove Dimension	ØA	ØB	F
	112.00	127.00	11.00

112.00

Part No	RUB 1120 1250 100		
Groove Dimension	ØA	ØB	F
	112.00	125.00	10.00

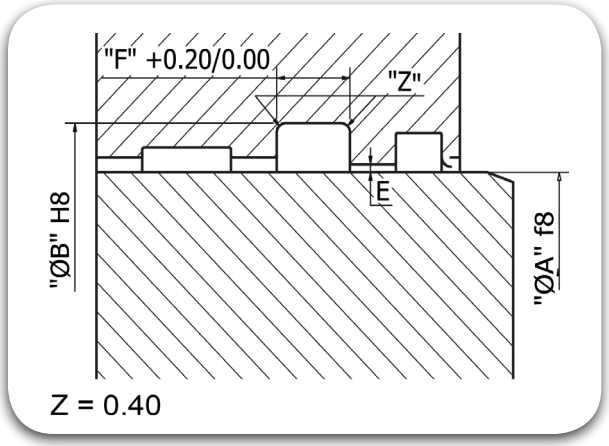

115.00

Part No	RUB 1150 1230 125					
Groove Dimension	ØA	x	ØB	x	F	
	115.00		123.00		12.50	

115.00

Part No	RUB 1150 1250 130					
Groove Dimension	ØA	x	ØB	x	F	
	115.00		125.00		13.00	

115.00

Part No	RUB 1150 1300 100					
Groove Dimension	ØA	x	ØB	x	F	
	115.00		130.00		10.00	

115.00

Part No	RUB 1150 1350 130					
Groove Dimension	ØA	x	ØB	x	F	
	115.00		135.00		13.00	

118.00

Part No	RUB 1180 1260 125					
Groove Dimension	ØA	x	ØB	x	F	
	118.00		126.00		12.50	

118.00

Part No	RUB 1180 1330 100					
Groove Dimension	ØA	x	ØB	x	F	
	118.00		133.00		10.00	

118.00

Part No	RUB 1180 1330 110					
Groove Dimension	ØA	x	ØB	x	F	
	118.00		133.00		11.00	

120.00

Part No	RUB 1200 1280 125					
Groove Dimension	ØA	x	ØB	x	F	
	120.00		128.00		12.50	

120.00

Part No	RUB 1200 1350 100					
Groove Dimension	ØA	x	ØB	x	F	
	120.00		135.00		10.00	

120.00

Part No	RUB 1200 1400 110					
Groove Dimension	ØA	x	ØB	x	F	
	120.00		140.00		11.00	

120.00

Part No	RUB 1200 1400 130					
Groove Dimension	ØA	x	ØB	x	F	
	120.00		140.00		13.00	

120.00

Part No	RUB 1200 1400 160					
Groove Dimension	ØA	x	ØB	x	F	
	120.00		140.00		16.00	

125.00

Part No	RUB 1250 1330 125					
Groove Dimension	ØA	x	ØB	x	F	
	125.00		133.00		12.50	

125.00

Part No	RUB 1250 1400 100		
Groove Dimension	ØA	ØB	F
	125.00	140.00	10.00

125.00

Part No	RUB 1250 1450 130		
Groove Dimension	ØA	ØB	F
	125.00	145.00	13.00

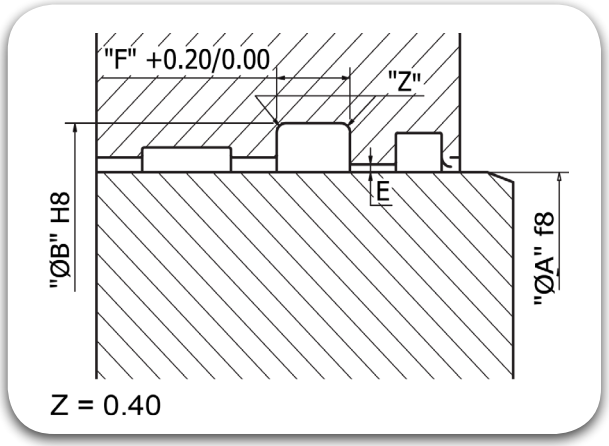

125.00

Part No	RUB 1250 1450 160		
Groove Dimension	ØA	ØB	F
	125.00	145.00	16.00

125.00

Part No	RUB 1250 1500 200		
Groove Dimension	ØA	ØB	F
	125.00	150.00	20.00

128.00

Part No	RUB 1280 1360 125		
Groove Dimension	ØA	ØB	F
	128.00	136.00	12.50

130.00

Part No	RUB 1300 1450 100		
Groove Dimension	ØA	ØB	F
	130.00	145.00	10.00

130.00

Part No	RUB 1300 1500 130		
Groove Dimension	ØA	ØB	F
	130.00	150.00	13.00

130.00

Part No	RUB 1300 1500 160		
Groove Dimension	ØA	ØB	F
	130.00	150.00	16.00

135.00

Part No	RUB 1350 1430 125		
Groove Dimension	ØA	ØB	F
	135.00	143.00	12.50

140.00

Part No	RUB 1400 1480 125		
Groove Dimension	ØA	ØB	F
	140.00	148.00	12.50

140.00

Part No	RUB 1400 1550 100		
Groove Dimension	ØA	ØB	F
	140.00	155.00	10.00

140.00

Part No	RUB 1400 1550 106		
Groove Dimension	ØA	ØB	F
	140.00	155.00	10.60

140.00

Part No	RUB 1400 1550 110		
Groove Dimension	ØA	ØB	F
	140.00	155.00	11.00

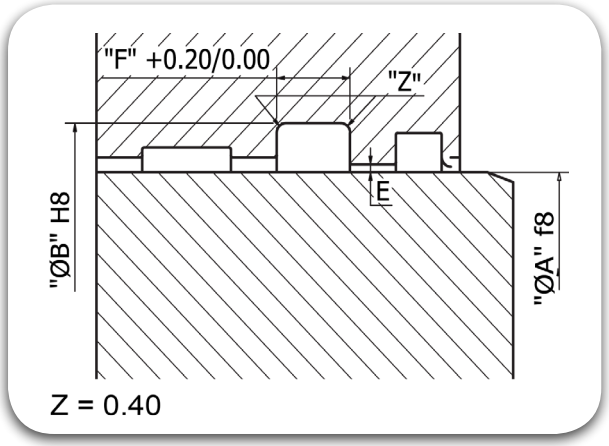

140.00

Part No	RUB 1400 1600 160					
Groove Dimension	ØA	x	ØB	x	F	
	140.00		160.00		16.00	

140.00

Part No	RUB 1400 1650 200					
Groove Dimension	ØA	x	ØB	x	F	
	140.00		165.00		20.00	

143.00

Part No	RUB 1430 1510 125					
Groove Dimension	ØA	x	ØB	x	F	
	143.00		151.00		12.50	

150.00

Part No	RUB 1500 1700 130					
Groove Dimension	ØA	x	ØB	x	F	
	150.00		170.00		13.00	

150.00

Part No	RUB 1500 1700 160					
Groove Dimension	ØA	x	ØB	x	F	
	150.00		170.00		16.00	

152.00

Part No	RUB 1520 1600 125					
Groove Dimension	ØA	x	ØB	x	F	
	152.00		160.00		12.50	

155.00

Part No	RUB 1550 1630 125					
Groove Dimension	ØA	x	ØB	x	F	
	155.00		163.00		12.50	

160.00

Part No	RUB 1600 1680 125					
Groove Dimension	ØA	x	ØB	x	F	
	160.00		168.00		12.50	

170.00

Part No	RUB 1700 1800 130					
Groove Dimension	ØA	x	ØB	x	F	
	170.00		180.00		13.00	

170.00

Part No	RUB 1700 1900 160					
Groove Dimension	ØA	x	ØB	x	F	
	170.00		190.00		16.00	

180.00

Part No	RUB 1800 2000 160					
Groove Dimension	ØA	x	ØB	x	F	
	180.00		200.00		16.00	

180.00

Part No	RUB 1800 2050 160					
Groove Dimension	ØA	x	ØB	x	F	
	180.00		205.00		16.00	

200.00

Part No	RUB 2000 2250 160					
Groove Dimension	ØA	x	ØB	x	F	
	200.00		225.00		16.00	

Rod Seals

RUL

TRIADA
TECHNOLOGIES

#SealingExcellence






Description

The RUL type of U-Cups are mainly used in the application where the pressure and temperature is low, the TRIAFLEX® (NBR) O-Ring has been integrated in the TRIATHANE® (Polyurethane) U-Cup which acts as an energizer providing sealing action on the lip.

Diameter Range	Ø20.00 – Ø440.00
Standard material	TRIATHANE® T479 (Polyurethane) TRIAFLEX® T571 (NBR) O-Ring
Temperature(°C)	-35° C to 110° C
Speed	≤ 0.50 m/s
Fluids	Mineral Hydraulic Fluids (for other media, please contact TRIADA® Application Engineering)
Pressure	≤ 250 bar

Reciprocating | Oscillating | Rotary | Helix | Static | Single Acting | Double Acting

Material Details

Seal Material	Seal Material Code	O-Ring Material	O-Ring Material / Code
TRIATHANE® Polyurethane	T479	TRIAFLEX® NBR 70 Shore A	N (T571)

Nomenclature

Part No	RUL	1000	1155	063	T479	N
	Seal profile	Bore Dia x 10	Groove Dia x 10	Groove Width x 10	Seal Material Code	O-Ring Material Code

Groove Details

Operating Pressure (Bar)	Radial Clearance "E" max
160	0.60
250	0.50

Groove Details

Groove Width	Radius "Z"
0.00 - 4.20	0.50
4.30 - 8.10	0.90

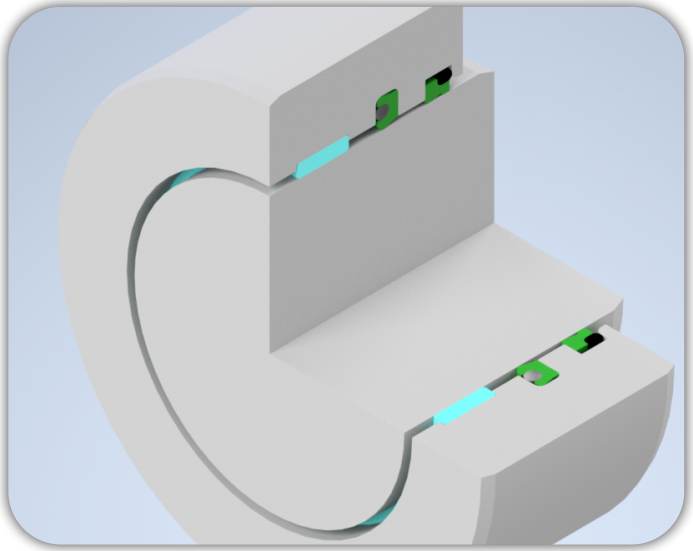

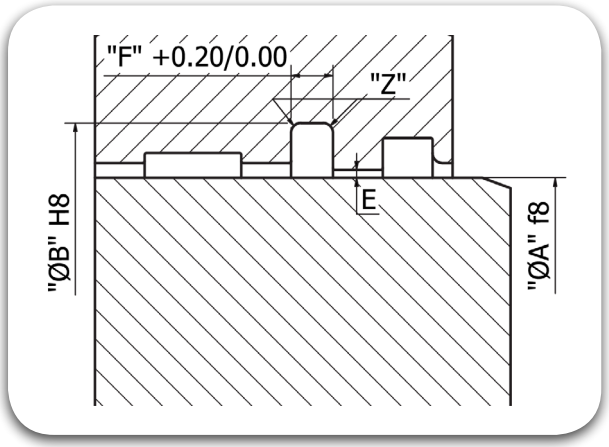

20.00		ØA		ØB		F
Part No	RUL 0200 0310 042					
Groove Dimension		20.00	x	31.00	x	4.20
O-Ring Size	ID 23.47 x C/S 2.62					

22.00		ØA		ØB		F
Part No	RUL 0220 0330 042					
Groove Dimension		22.00	x	33.00	x	4.20
O-Ring Size	ID 25.07 x C/S 2.62					

25.00		ØA		ØB		F
Part No	RUL 0250 0360 042					
Groove Dimension		25.00	x	36.00	x	4.20
O-Ring Size	ID 28.24 x C/S 2.62					

28.00		ØA		ØB		F
Part No	RUL 0280 0390 042					
Groove Dimension		28.00	x	39.00	x	4.20
O-Ring Size	ID 31.42 x C/S 2.62					

32.00		ØA		ØB		F
Part No	RUL 0320 0430 042					
Groove Dimension		32.00	x	43.00	x	4.20
O-Ring Size	ID 36.17 x C/S 2.62					

36.00		ØA		ØB		F
Part No	RUL 0360 0470 042					
Groove Dimension		36.00	x	47.00	x	4.20
O-Ring Size	ID 39.34 x C/S 2.62					

40.00		ØA		ØB		F
Part No	RUL 0400 0510 042					
Groove Dimension		40.00	x	51.00	x	4.20
O-Ring Size	ID 44.12 x C/S 2.62					

40.00		ØA		ØB		F
Part No	RUL 0400 0555 063					
Groove Dimension		40.00	x	55.50	x	6.30
O-Ring Size	ID 44.04 x C/S 3.53					

45.00		ØA		ØB		F
Part No	RUL 0450 0560 042					
Groove Dimension		45.00	x	56.00	x	4.20
O-Ring Size	ID 48.90 x C/S 2.62					

45.00		ØA		ØB		F
Part No	RUL 0450 0605 063					
Groove Dimension		45.00	x	60.50	x	6.30
O-Ring Size	ID 50.39 x C/S 3.53					

50.00		ØA		ØB		F
Part No	RUL 0500 0610 042					
Groove Dimension		50.00	x	61.00	x	4.20
O-Ring Size	ID 53.64 x C/S 2.62					

50.00		ØA		ØB		F
Part No	RUL 0500 0655 063					
Groove Dimension		50.00	x	65.50	x	6.30
O-Ring Size	ID 53.57 x C/S 3.53					

55.00		ØA		ØB		F
Part No	RUL 0550 0660 042					
Groove Dimension		55.00	x	66.00	x	4.20
O-Ring Size	ID 58.42 x C/S 2.62					

55.00

Part No	RUL 0550 0705 063				
Groove Dimension	ØA	x	ØB	x	F
	55.00		70.50		6.30
O-Ring Size	ID	59.92	x	C/S	3.53

56.00

Part No	RUL 0560 0670 042				
Groove Dimension	ØA	x	ØB	x	F
	56.00		67.00		4.20
O-Ring Size	ID	59.99	x	C/S	2.62

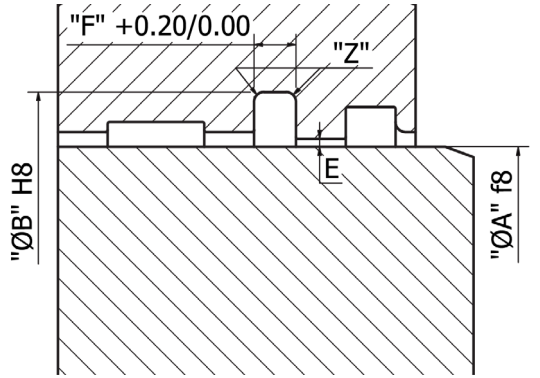

56.00

Part No	RUL 0560 0715 063				
Groove Dimension	ØA	x	ØB	x	F
	56.00		71.50		6.30
O-Ring Size	ID	59.92	x	C/S	3.53

63.00

Part No	RUL 0630 0740 042				
Groove Dimension	ØA	x	ØB	x	F
	63.00		74.00		4.20
O-Ring Size	ID	66.34	x	C/S	2.62

63.00

Part No	RUL 0630 0785 063				
Groove Dimension	ØA	x	ØB	x	F
	63.00		78.50		6.30
O-Ring Size	ID	66.27	x	C/S	3.53

65.00

Part No	RUL 0650 0805 063				
Groove Dimension	ØA	x	ØB	x	F
	65.00		80.50		6.30
O-Ring Size	ID	69.44	x	C/S	3.53

70.00

Part No	RUL 0700 0855 063				
Groove Dimension	ØA	x	ØB	x	F
	70.00		85.50		6.30
O-Ring Size	ID	75.79	x	C/S	3.53

75.00

Part No	RUL 0750 0860 042				
Groove Dimension	ØA	x	ØB	x	F
	75.00		86.00		4.20
O-Ring Size	ID	82.22	x	C/S	2.62

75.00

Part No	RUL 0750 0905 063				
Groove Dimension	ØA	x	ØB	x	F
	75.00		90.50		6.30
O-Ring Size	ID	82.14	x	C/S	3.53

80.00

Part No	RUL 0800 0955 063				
Groove Dimension	ØA	x	ØB	x	F
	80.00		95.50		6.30
O-Ring Size	ID	85.32	x	C/S	3.53

90.00

Part No	RUL 0900 1055 063				
Groove Dimension	ØA	x	ØB	x	F
	90.00		105.50		6.30
O-Ring Size	ID	94.84	x	C/S	3.53

95.00

Part No	RUL 0950 1105 063				
Groove Dimension	ØA	x	ØB	x	F
	95.00		110.50		6.30
O-Ring Size	ID	101.19	x	C/S	3.53

100.00

Part No	RUL 1000 1155 063				
Groove Dimension	ØA	x	ØB	x	F
	100.00		115.50		6.30
O-Ring Size	ID	104.37	x	C/S	3.53

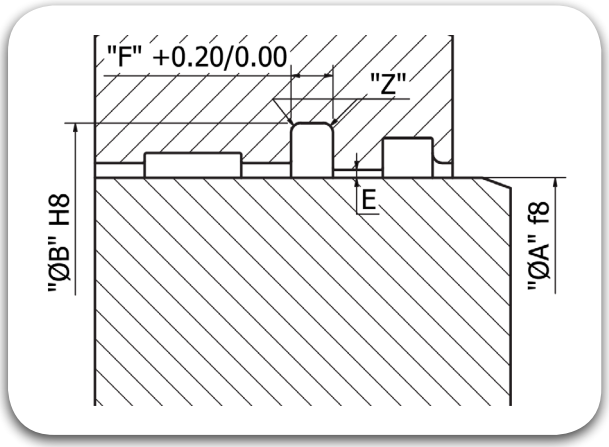

105.00

Part No	RUL 1050 1205 063		
Groove Dimension	ØA 105.00	ØB 120.50	F 6.30
O-Ring Size	ID 110.72	C/S 3.53	

110.00

Part No	RUL 1100 1255 063		
Groove Dimension	ØA 110.00	ØB 125.50	F 6.30
O-Ring Size	ID 113.89	C/S 3.53	

120.00

Part No	RUL 1200 1355 063		
Groove Dimension	ØA 120.00	ØB 135.50	F 6.30
O-Ring Size	ID 126.59	C/S 3.53	

130.00

Part No	RUL 1300 1455 063		
Groove Dimension	ØA 130.00	ØB 145.50	F 6.30
O-Ring Size	ID 136.12	C/S 3.53	

135.00

Part No	RUL 1350 1505 063		
Groove Dimension	ØA 135.00	ØB 150.50	F 6.30
O-Ring Size	ID 142.47	C/S 3.53	

140.00

Part No	RUL 1400 1555 063		
Groove Dimension	ØA 140.00	ØB 155.50	F 6.30
O-Ring Size	ID 145.64	C/S 3.53	

145.00

Part No	RUL 1450 1605 063		
Groove Dimension	ØA 145.00	ØB 160.50	F 6.30
O-Ring Size	ID 151.99	C/S 3.53	

150.00

Part No	RUL 1500 1655 063		
Groove Dimension	ØA 150.00	ØB 165.50	F 6.30
O-Ring Size	ID 158.34	C/S 3.53	

160.00

Part No	RUL 1600 1755 063		
Groove Dimension	ØA 160.00	ØB 175.50	F 6.30
O-Ring Size	ID 164.69	C/S 3.53	

160.00

Part No	RUL 1600 1810 081		
Groove Dimension	ØA 160.00	ØB 181.00	F 8.10
O-Ring Size	ID 164.47	C/S 5.33	

180.00

Part No	RUL 1800 1955 063		
Groove Dimension	ØA 180.00	ØB 195.50	F 6.30
O-Ring Size	ID 183.73	C/S 3.53	

190.00

Part No	RUL 1900 2055 063		
Groove Dimension	ØA 190.00	ØB 205.50	F 6.30
O-Ring Size	ID 196.44	C/S 3.53	

200.00

Part No	RUL 2000 2155 063		
Groove Dimension	ØA 200.00	ØB 215.50	F 6.30
O-Ring Size	ID 209.14	C/S 3.53	

200.00

Part No	RUL 2000 2210 081				
Groove Dimension	ØA	x	ØB	x	F
	200.00		221.00		8.10
O-Ring Size	ID	208.92	x	C/S	5.33

210.00

Part No	RUL 2100 2310 081				
Groove Dimension	ØA	x	ØB	x	F
	210.00		231.00		8.10
O-Ring Size	ID	221.62	x	C/S	5.33

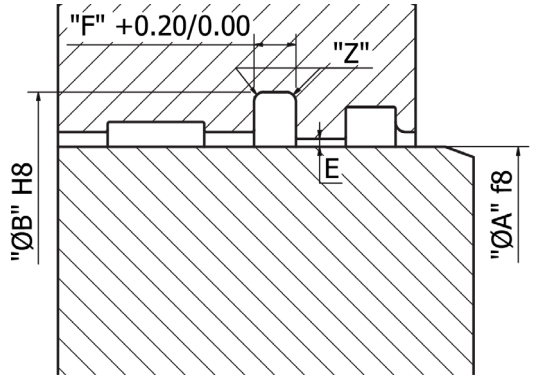

260.00

Part No	RUL 2600 2810 081				
Groove Dimension	ØA	x	ØB	x	F
	260.00		281.00		8.10
O-Ring Size	ID	266.07	x	C/S	5.33

300.00

Part No	RUL 3000 3210 081				
Groove Dimension	ØA	x	ØB	x	F
	300.00		321.00		8.10
O-Ring Size	ID	329.57	x	C/S	5.33

350.00

Part No	RUL 3500 3710 081				
Groove Dimension	ØA	x	ØB	x	F
	350.00		371.00		8.10
O-Ring Size	ID	354.97	x	C/S	5.33

440.00

Part No	RUL 4400 4610 081				
Groove Dimension	ØA	x	ØB	x	F
	440.00		461.00		8.10
O-Ring Size	ID	456.06	x	C/S	5.33

Rod Seals

RUC

TRIADA
TECHNOLOGIES

#SealingExcellence




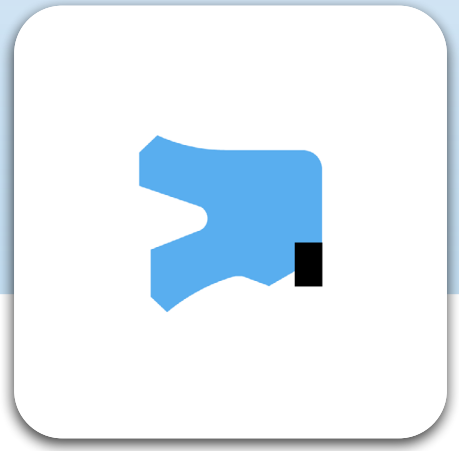

Description

The RUC type Seal is similar to the RUB type, but with a backup ring at the end of the secondary lip which prevents extrusion of the seal, it also; Reduces stick-slip effects by maintaining a thin film of oil between the Secondary lip and the Primary Lip; Creates a barrier for any external impurities, which has managed to pass through the Wiper Lips, from entering into the system; Compensates for the material shrinkage at very low temperatures;Functions as a stabilizer, particularly during spike pressures.

Diameter Range	Ø10.00 – Ø3500.00
Standard material	TRIATHANE® T479(Polyurethane) Sealing Element with a TRIAMIDE® T485(POM) Anti-Extrusion Ring
Temperature(°C)	-35° C to 110° C
Speed	≤ 0.50 m/s
Fluids	Hydraulic fluids (Mineral Oil based) depending on Seal Compounds selected.
Pressure	< 500 bar

Reciprocating · Oscillating · Rotary · Helix · Static · Single Acting · Double Acting

Material Details

Seal Material	Seal Material Code	Back-up Ring Material / Code
TRIATHANE® Polyurethane	T479	TRIAMIDE® POM (T485)

Nomenclature

Part No	RUC	1050	1130	080	T479	P
	Seal profile	Rod Dia x 10	Groove Dia x 10	Groove Width x 10	Seal Material Code	Back-up Ring Material Code

Groove Details

Operating Pressure (Bar)	Radial Clearance "E" max	
	ØA < 60mm	ØA > 60mm
50	0.40	0.50
100	0.30	0.40
200	0.20	0.30
300	0.15	0.20
400	0.10	0.15

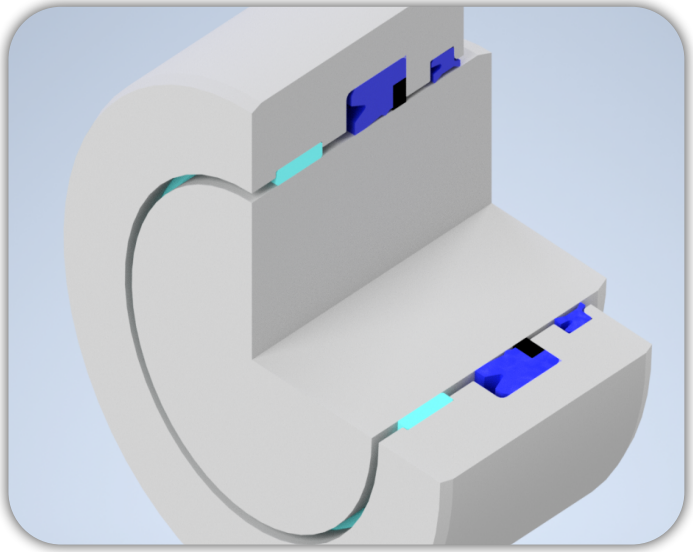

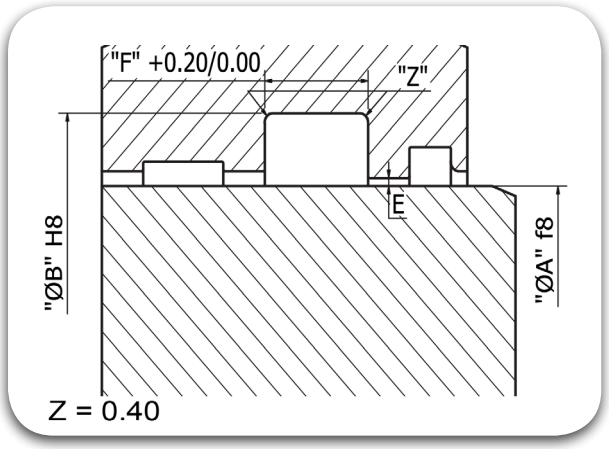

5.00

Part No	RUC 0050 0100 040				
Groove Dimension	ØA	x	ØB	x	F
	5.00		10.00		4.00

6.00

Part No	RUC 0060 0110 040				
Groove Dimension	ØA	x	ØB	x	F
	6.00		11.00		4.00

6.00

Part No	RUC 0060 0130 056				
Groove Dimension	ØA	x	ØB	x	F
	6.00		13.00		5.60

7.00

Part No	RUC 0070 0120 045				
Groove Dimension	ØA	x	ØB	x	F
	7.00		12.00		4.50

10.00

Part No	RUC 0100 0200 080				
Groove Dimension	ØA	x	ØB	x	F
	10.00		20.00		8.00

12.00

Part No	RUC 0120 0190 056				
Groove Dimension	ØA	x	ØB	x	F
	12.00		19.00		5.60

12.00

Part No	RUC 0120 0220 080				
Groove Dimension	ØA	x	ØB	x	F
	12.00		22.00		8.00

14.00

Part No	RUC 0140 0200 063				
Groove Dimension	ØA	x	ØB	x	F
	14.00		20.00		6.30

14.00

Part No	RUC 0140 0210 060				
Groove Dimension	ØA	x	ØB	x	F
	14.00		21.00		6.00

14.00

Part No	RUC 0140 0240 080				
Groove Dimension	ØA	x	ØB	x	F
	14.00		24.00		8.00

15.00

Part No	RUC 0150 0210 050				
Groove Dimension	ØA	x	ØB	x	F
	15.00		21.00		5.00

15.00

Part No	RUC 0150 0260 080				
Groove Dimension	ØA	x	ØB	x	F
	15.00		26.00		8.00

16.00

Part No	RUC 0160 0260 060				
Groove Dimension	ØA	x	ØB	x	F
	16.00		26.00		6.00

16.00

Part No	RUC 0160 0260 080		
Groove Dimension	ØA	ØB	F
	16.00	26.00	8.00

18.00

Part No	RUC 0180 0250 060		
Groove Dimension	ØA	ØB	F
	18.00	25.00	6.00

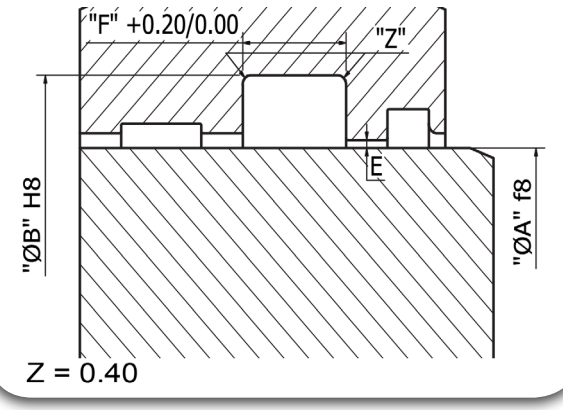

18.00

Part No	RUC 0180 0260 063		
Groove Dimension	ØA	ØB	F
	18.00	26.00	6.30

18.00

Part No	RUC 0180 0260 070		
Groove Dimension	ØA	ØB	F
	18.00	26.00	7.00

18.00

Part No	RUC 0180 0260 090		
Groove Dimension	ØA	ØB	F
	18.00	26.00	9.00

18.00

Part No	RUC 0180 0280 080		
Groove Dimension	ØA	ØB	F
	18.00	28.00	8.00

19.50

Part No	RUC 0195 0275 090		
Groove Dimension	ØA	ØB	F
	19.50	27.50	9.00

20.00

Part No	RUC 0200 0280 063		
Groove Dimension	ØA	ØB	F
	20.00	28.00	6.30

20.00

Part No	RUC 0200 0280 070		
Groove Dimension	ØA	ØB	F
	20.00	28.00	7.00

20.00

Part No	RUC 0200 0280 080		
Groove Dimension	ØA	ØB	F
	20.00	28.00	8.00

20.00

Part No	RUC 0200 0300 080		
Groove Dimension	ØA	ØB	F
	20.00	30.00	8.00

22.00

Part No	RUC 0220 0290 056		
Groove Dimension	ØA	ØB	F
	22.00	29.00	5.60

22.00

Part No	RUC 0220 0300 072		
Groove Dimension	ØA	ØB	F
	22.00	30.00	7.20

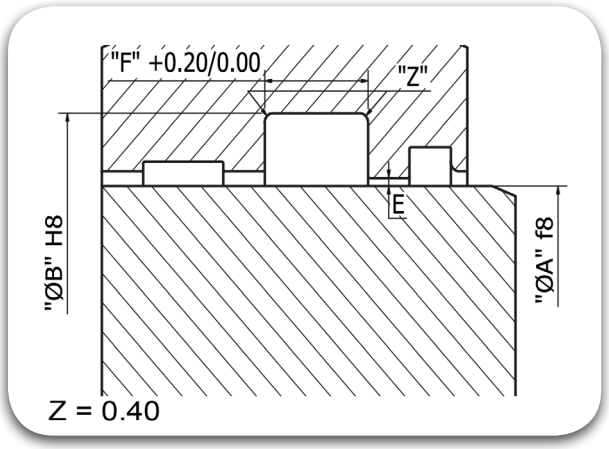

22.00

Part No	RUC 0220 0320 080				
Groove Dimension	ØA	x	ØB	x	F
	22.00		32.00		8.00

25.00

Part No	RUC 0250 0330 063				
Groove Dimension	ØA	x	ØB	x	F
	25.00		33.00		6.30

25.00

Part No	RUC 0250 0330 070				
Groove Dimension	ØA	x	ØB	x	F
	25.00		33.00		7.00

25.00

Part No	RUC 0250 0330 075				
Groove Dimension	ØA	x	ØB	x	F
	25.00		33.00		7.50

25.00

Part No	RUC 0250 0330 080				
Groove Dimension	ØA	x	ØB	x	F
	25.00		33.00		8.00

25.00

Part No	RUC 0250 0350 080				
Groove Dimension	ØA	x	ØB	x	F
	25.00		35.00		8.00

28.00

Part No	RUC 0280 0360 063				
Groove Dimension	ØA	x	ØB	x	F
	28.00		36.00		6.30

28.00

Part No	RUC 0280 0360 080				
Groove Dimension	ØA	x	ØB	x	F
	28.00		36.00		8.00

28.00

Part No	RUC 0280 0380 080				
Groove Dimension	ØA	x	ØB	x	F
	28.00		38.00		8.00

28.00

Part No	RUC 0280 0380 085				
Groove Dimension	ØA	x	ØB	x	F
	28.00		38.00		8.50

28.00

Part No	RUC 0280 0380 090				
Groove Dimension	ØA	x	ØB	x	F
	28.00		38.00		9.00

28.00

Part No	RUC 0280 0430 125				
Groove Dimension	ØA	x	ØB	x	F
	28.00		43.00		12.50

30.00

Part No	RUC 0300 0380 063				
Groove Dimension	ØA	x	ØB	x	F
	30.00		38.00		6.30

30.00

Part No	RUC 0300 0380 125		
Groove Dimension	ØA	ØB	F
	30.00	38.00	12.50

30.00

Part No	RUC 0300 0400 075		
Groove Dimension	ØA	ØB	F
	30.00	40.00	7.50

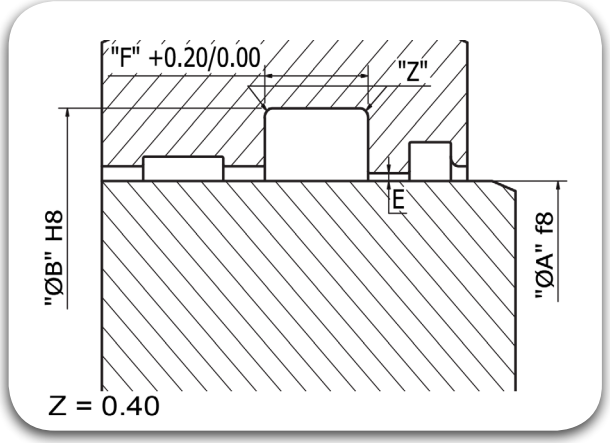

30.00

Part No	RUC 0300 0400 080		
Groove Dimension	ØA	ØB	F
	30.00	40.00	8.00

32.00

Part No	RUC 0320 0400 070		
Groove Dimension	ØA	ØB	F
	32.00	40.00	7.00

32.00

Part No	RUC 0320 0400 070		
Groove Dimension	ØA	ØB	F
	32.00	40.00	7.00

32.00

Part No	RUC 0320 0415 089		
Groove Dimension	ØA	ØB	F
	32.00	41.50	8.90

32.00

Part No	RUC 0320 0420 080		
Groove Dimension	ØA	ØB	F
	32.00	42.00	8.00

35.00

Part No	RUC 0350 0420 080		
Groove Dimension	ØA	ØB	F
	35.00	42.00	8.00

35.00

Part No	RUC 0350 0430 063		
Groove Dimension	ØA	ØB	F
	35.00	43.00	6.30

35.00

Part No	RUC 0350 0430 080		
Groove Dimension	ØA	ØB	F
	35.00	43.00	8.00

35.00

Part No	RUC 0350 0450 080		
Groove Dimension	ØA	ØB	F
	35.00	45.00	8.00

35.00

Part No	RUC 0350 0450 110		
Groove Dimension	ØA	ØB	F
	35.00	45.00	11.00

36.00

Part No	RUC 0360 0430 125		
Groove Dimension	ØA	ØB	F
	36.00	43.00	12.50

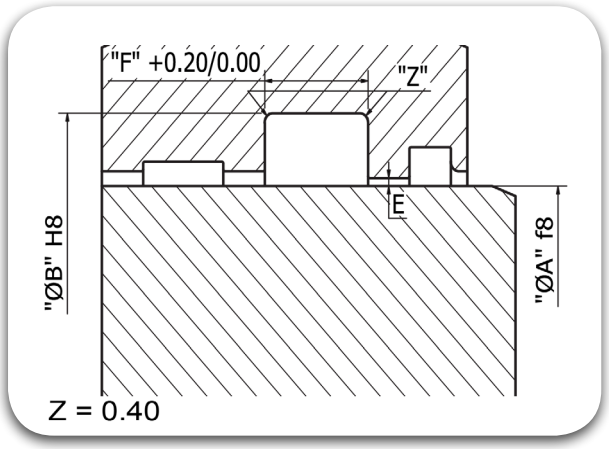

36.00

Part No	RUC 0360 0440 063		
Groove Dimension	ØA	ØB	F
	36.00	44.00	6.30

36.00

Part No	RUC 0360 0440 070		
Groove Dimension	ØA	ØB	F
	36.00	44.00	7.00

36.00

Part No	RUC 0360 0460 080		
Groove Dimension	ØA	ØB	F
	36.00	46.00	8.00

36.00

Part No	RUC 0360 0460 080		
Groove Dimension	ØA	ØB	F
	36.00	46.00	8.00

36.00

Part No	RUC 0360 0460 085		
Groove Dimension	ØA	ØB	F
	36.00	46.00	8.50

38.00

Part No	RUC 0380 0460 125		
Groove Dimension	ØA	ØB	F
	38.00	46.00	12.50

38.00

Part No	RUC 0380 0480 090		
Groove Dimension	ØA	ØB	F
	38.00	48.00	9.00

40.00

Part No	RUC 0400 0480 063		
Groove Dimension	ØA	ØB	F
	40.00	48.00	6.30

40.00

Part No	RUC 0400 0480 125		
Groove Dimension	ØA	ØB	F
	40.00	48.00	12.50

40.00

Part No	RUC 0400 0500 080		
Groove Dimension	ØA	ØB	F
	40.00	50.00	8.00

40.00

Part No	RUC 0400 0500 110		
Groove Dimension	ØA	ØB	F
	40.00	50.00	11.00

40.00

Part No	RUC 0400 0550 110		
Groove Dimension	ØA	ØB	F
	40.00	55.00	11.00

40.00

Part No	RUC 0400 0550 110		
Groove Dimension	ØA	ØB	F
	40.00	55.00	11.00

40.00

Part No	RUC 0400 0550 125					
Groove Dimension	ØA	x	ØB	x	F	
	40.00		55.00		12.50	

40.00

Part No	RUC 0400 0600 130					
Groove Dimension	ØA	x	ØB	x	F	
	40.00		60.00		13.00	

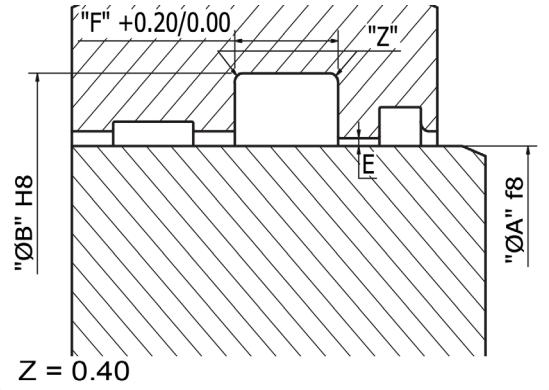

42.00

Part No	RUC 0420 0500 125					
Groove Dimension	ØA	x	ØB	x	F	
	42.00		50.00		12.50	

42.00

Part No	RUC 0420 0510 110					
Groove Dimension	ØA	x	ØB	x	F	
	42.00		51.00		11.00	

42.00

Part No	RUC 0420 0530 100					
Groove Dimension	ØA	x	ØB	x	F	
	42.00		53.00		10.00	

45.00

Part No	RUC 0450 0530 125					
Groove Dimension	ØA	x	ØB	x	F	
	45.00		53.00		12.50	

45.00

Part No	RUC 0450 0550 063					
Groove Dimension	ØA	x	ØB	x	F	
	45.00		55.00		6.30	

45.00

Part No	RUC 0450 0550 080					
Groove Dimension	ØA	x	ØB	x	F	
	45.00		55.00		8.00	

45.00

Part No	RUC 0450 0550 125					
Groove Dimension	ØA	x	ØB	x	F	
	45.00		55.00		12.50	

45.00

Part No	RUC 0450 0577 105					
Groove Dimension	ØA	x	ØB	x	F	
	45.00		57.70		10.50	

45.00

Part No	RUC 0450 0600 125					
Groove Dimension	ØA	x	ØB	x	F	
	45.00		60.00		12.50	

45.00

Part No	RUC 0450 0600 125					
Groove Dimension	ØA	x	ØB	x	F	
	45.00		60.00		12.50	

46.00

Part No	RUC 0460 0560 110					
Groove Dimension	ØA	x	ØB	x	F	
	46.00		56.00		11.00	

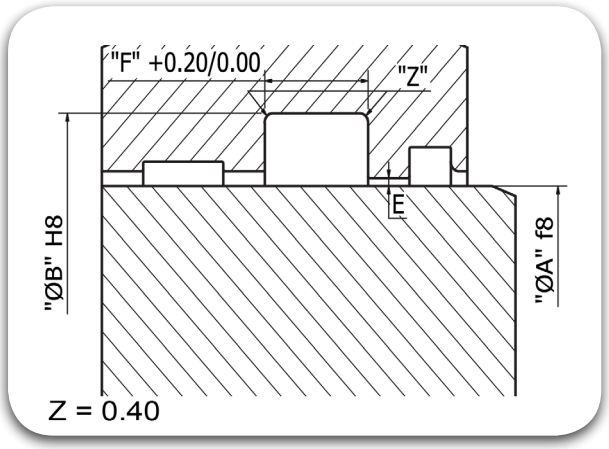

48.00

Part No	RUC 0480 0560 125					
Groove Dimension	ØA	x	ØB	x	F	
	48.00		56.00		12.50	

48.00

Part No	RUC 0480 0560 130					
Groove Dimension	ØA	x	ØB	x	F	
	48.00		56.00		13.00	

50.00

Part No	RUC 0500 0570 110					
Groove Dimension	ØA	x	ØB	x	F	
	50.00		57.00		11.00	

50.00

Part No	RUC 0500 0580 125					
Groove Dimension	ØA	x	ØB	x	F	
	50.00		58.00		12.50	

50.00

Part No	RUC 0500 0590 110					
Groove Dimension	ØA	x	ØB	x	F	
	50.00		59.00		11.00	

50.00

Part No	RUC 0500 0600 080					
Groove Dimension	ØA	x	ØB	x	F	
	50.00		60.00		8.00	

50.00

Part No	RUC 0500 0600 080					
Groove Dimension	ØA	x	ØB	x	F	
	50.00		60.00		8.00	

50.00

Part No	RUC 0500 0600 110					
Groove Dimension	ØA	x	ØB	x	F	
	50.00		60.00		11.00	

50.00

Part No	RUC 0500 0627 105					
Groove Dimension	ØA	x	ØB	x	F	
	50.00		62.70		10.50	

50.00

Part No	RUC 0500 0650 110					
Groove Dimension	ØA	x	ØB	x	F	
	50.00		65.00		11.00	

50.00

Part No	RUC 0500 0650 110					
Groove Dimension	ØA	x	ØB	x	F	
	50.00		65.00		11.00	

50.00

Part No	RUC 0500 0650 125					
Groove Dimension	ØA	x	ØB	x	F	
	50.00		65.00		12.50	

50.00

Part No	RUC 0500 0650 165					
Groove Dimension	ØA	x	ØB	x	F	
	50.00		65.00		16.50	

50.00

Part No	RUC 0500 0700 130					
Groove Dimension	ØA	x	ØB	x	F	
	50.00		70.00		13.00	

50.00

Part No	RUC 0500 0700 150					
Groove Dimension	ØA	x	ØB	x	F	
	50.00		70.00		15.00	

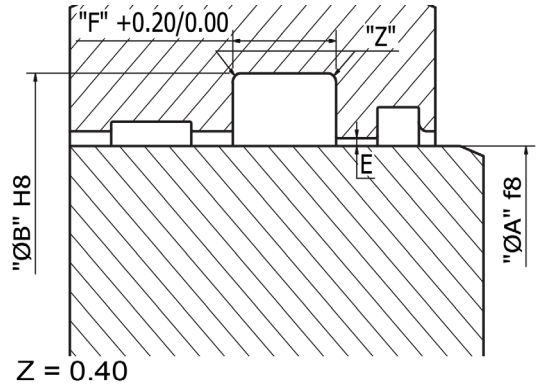

55.00

Part No	RUC 0550 0625 100					
Groove Dimension	ØA	x	ØB	x	F	
	55.00		62.50		10.00	

55.00

Part No	RUC 0550 0630 125					
Groove Dimension	ØA	x	ØB	x	F	
	55.00		63.00		12.50	

55.00

Part No	RUC 0550 0650 080					
Groove Dimension	ØA	x	ØB	x	F	
	55.00		65.00		8.00	

55.00

Part No	RUC 0550 0650 095					
Groove Dimension	ØA	x	ØB	x	F	
	55.00		65.00		9.50	

55.00

Part No	RUC 0550 0650 110					
Groove Dimension	ØA	x	ØB	x	F	
	55.00		65.00		11.00	

55.00

Part No	RUC 0550 0680 115					
Groove Dimension	ØA	x	ØB	x	F	
	55.00		68.00		11.50	

56.00

Part No	RUC 0560 0710 125					
Groove Dimension	ØA	x	ØB	x	F	
	56.00		71.00		12.50	

58.00

Part No	RUC 0580 0680 125					
Groove Dimension	ØA	x	ØB	x	F	
	58.00		68.00		12.50	

60.00

Part No	RUC 0600 0680 125					
Groove Dimension	ØA	x	ØB	x	F	
	60.00		68.00		12.50	

60.00

Part No	RUC 0600 0680 140					
Groove Dimension	ØA	x	ØB	x	F	
	60.00		68.00		14.00	

60.00

Part No	RUC 0600 0690 110					
Groove Dimension	ØA	x	ØB	x	F	
	60.00		69.00		11.00	

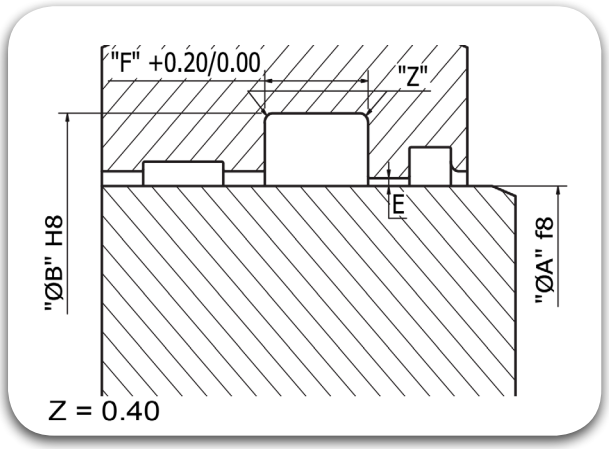

60.00

Part No	RUC 0600 0700 070				
Groove Dimension	ØA	x	ØB	x	F
	60.00		70.00		7.00

60.00

Part No	RUC 0600 0700 080				
Groove Dimension	ØA	x	ØB	x	F
	60.00		70.00		8.00

60.00

Part No	RUC 0600 0700 125				
Groove Dimension	ØA	x	ØB	x	F
	60.00		70.00		12.50

60.00

Part No	RUC 0600 0700 130				
Groove Dimension	ØA	x	ØB	x	F
	60.00		70.00		13.00

60.00

Part No	RUC 0600 0720 100				
Groove Dimension	ØA	x	ØB	x	F
	60.00		72.00		10.00

60.00

Part No	RUC 0600 0750 110				
Groove Dimension	ØA	x	ØB	x	F
	60.00		75.00		11.00

60.00

Part No	RUC 0600 0750 125				
Groove Dimension	ØA	x	ØB	x	F
	60.00		75.00		12.50

60.00

Part No	RUC 0600 0750 125				
Groove Dimension	ØA	x	ØB	x	F
	60.00		75.00		12.50

60.00

Part No	RUC 0600 0750 165				
Groove Dimension	ØA	x	ØB	x	F
	60.00		75.00		16.50

60.00

Part No	RUC 0600 0800 130				
Groove Dimension	ØA	x	ØB	x	F
	60.00		80.00		13.00

63.00

Part No	RUC 0630 0750 110				
Groove Dimension	ØA	x	ØB	x	F
	63.00		75.00		11.00

63.00

Part No	RUC 0630 0780 125				
Groove Dimension	ØA	x	ØB	x	F
	63.00		78.00		12.50

63.00

Part No	RUC 0630 0780 125				
Groove Dimension	ØA	x	ØB	x	F
	63.00		78.00		12.50

63.00

Part No	RUC 0630 0830 130		
Groove Dimension	ØA	ØB	F
	63.00	83.00	13.00

63.00

Part No	RUC 0630 0830 145		
Groove Dimension	ØA	ØB	F
	63.00	83.00	14.50

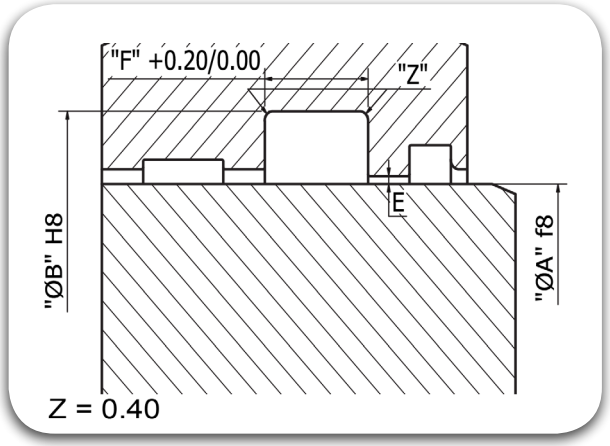

65.00

Part No	RUC 0650 0730 125		
Groove Dimension	ØA	ØB	F
	65.00	73.00	12.50

65.00

Part No	RUC 0650 0750 110		
Groove Dimension	ØA	ØB	F
	65.00	75.00	11.00

65.00

Part No	RUC 0650 0750 125		
Groove Dimension	ØA	ØB	F
	65.00	75.00	12.50

65.00

Part No	RUC 0650 0777 105		
Groove Dimension	ØA	ØB	F
	65.00	77.70	10.50

65.00

Part No	RUC 0650 0800 125		
Groove Dimension	ØA	ØB	F
	65.00	80.00	12.50

66.00

Part No	RUC 0660 0800 110		
Groove Dimension	ØA	ØB	F
	66.00	80.00	11.00

67.00

Part No	RUC 0670 0750 125		
Groove Dimension	ØA	ØB	F
	67.00	75.00	12.50

70.00

Part No	RUC 0700 0775 100		
Groove Dimension	ØA	ØB	F
	70.00	77.50	10.00

70.00

Part No	RUC 0700 0780 125		
Groove Dimension	ØA	ØB	F
	70.00	78.00	12.50

70.00

Part No	RUC 0700 0790 140		
Groove Dimension	ØA	ØB	F
	70.00	79.00	14.00

70.00

Part No	RUC 0700 0800 080		
Groove Dimension	ØA	ØB	F
	70.00	80.00	8.00

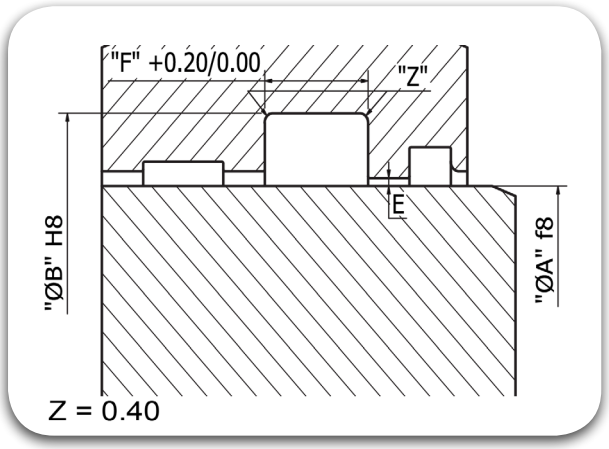

70.00

Part No	RUC 0700 0800 090				
Groove Dimension	ØA	x	ØB	x	F
	70.00		80.00		9.00

70.00

Part No	RUC 0700 0800 125				
Groove Dimension	ØA	x	ØB	x	F
	70.00		80.00		12.50

70.00

Part No	RUC 0700 0800 130				
Groove Dimension	ØA	x	ØB	x	F
	70.00		80.00		13.00

70.00

Part No	RUC 0700 0820 096				
Groove Dimension	ØA	x	ØB	x	F
	70.00		82.00		9.60

70.00

Part No	RUC 0700 0850 125				
Groove Dimension	ØA	x	ØB	x	F
	70.00		85.00		12.50

70.00

Part No	RUC 0700 0850 125				
Groove Dimension	ØA	x	ØB	x	F
	70.00		85.00		12.50

70.00

Part No	RUC 0700 0900 130				
Groove Dimension	ØA	x	ØB	x	F
	70.00		90.00		13.00

73.00

Part No	RUC 0730 0824 078				
Groove Dimension	ØA	x	ØB	x	F
	73.00		82.40		7.80

75.00

Part No	RUC 0750 0830 125				
Groove Dimension	ØA	x	ØB	x	F
	75.00		83.00		12.50

75.00

Part No	RUC 0750 0850 070				
Groove Dimension	ØA	x	ØB	x	F
	75.00		85.00		7.00

75.00

Part No	RUC 0750 0850 095				
Groove Dimension	ØA	x	ØB	x	F
	75.00		85.00		9.50

75.00

Part No	RUC 0750 0850 110				
Groove Dimension	ØA	x	ØB	x	F
	75.00		85.00		11.00

75.00

Part No	RUC 0750 0850 125				
Groove Dimension	ØA	x	ØB	x	F
	75.00		85.00		12.50

75.00

Part No	RUC 0750 0850 130					
Groove Dimension	ØA	x	ØB	x	F	
	75.00		85.00		13.00	

77.00

Part No	RUC 0770 0860 150					
Groove Dimension	ØA	x	ØB	x	F	
	77.00		86.00		15.00	

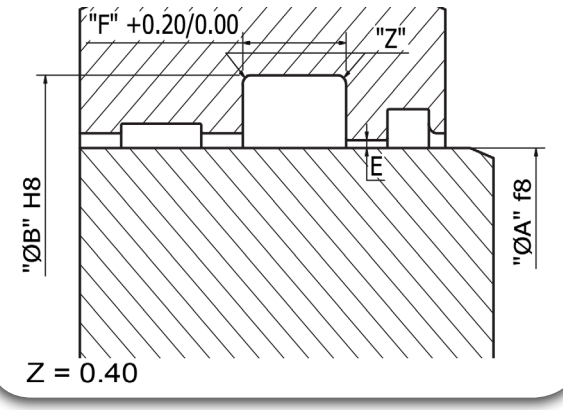

78.00

Part No	RUC 0780 0860 125					
Groove Dimension	ØA	x	ØB	x	F	
	78.00		86.00		12.50	

78.00

Part No	RUC 0780 0860 140					
Groove Dimension	ØA	x	ØB	x	F	
	78.00		86.00		14.00	

78.00

Part No	RUC 0780 0860 145					
Groove Dimension	ØA	x	ØB	x	F	
	78.00		86.00		14.50	

78.00

Part No	RUC 0780 0900 130					
Groove Dimension	ØA	x	ØB	x	F	
	78.00		90.00		13.00	

79.40

Part No	RUC 0794 8890 105					
Groove Dimension	ØA	x	ØB	x	F	
	79.40		88.90		10.50	

80.00

Part No	RUC 0800 0880 125					
Groove Dimension	ØA	x	ØB	x	F	
	80.00		88.00		12.50	

80.00

Part No	RUC 0800 0900 080					
Groove Dimension	ØA	x	ØB	x	F	
	80.00		90.00		8.00	

80.00

Part No	RUC 0800 0900 110					
Groove Dimension	ØA	x	ØB	x	F	
	80.00		90.00		11.00	

80.00

Part No	RUC 0800 0900 125					
Groove Dimension	ØA	x	ØB	x	F	
	80.00		90.00		12.50	

80.00

Part No	RUC 0800 0900 130					
Groove Dimension	ØA	x	ØB	x	F	
	80.00		90.00		13.00	

80.00

Part No	RUC 0800 0950 125					
Groove Dimension	ØA	x	ØB	x	F	
	80.00		95.00		12.50	

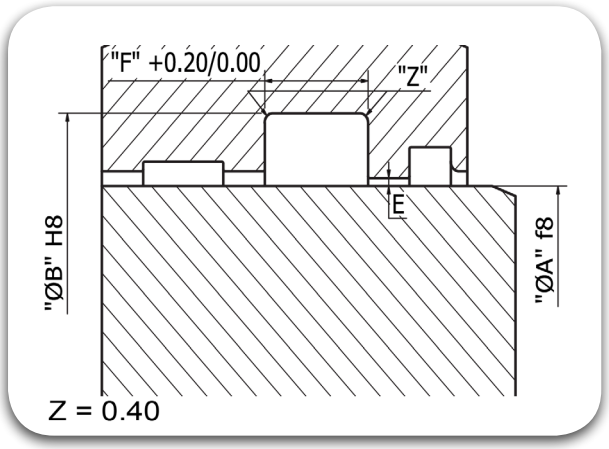

80.00

Part No	RUC 0800 0950 125					
Groove Dimension	ØA	x	ØB	x	F	
	80.00		95.00		12.50	

80.00

Part No	RUC 0800 0950 160					
Groove Dimension	ØA	x	ØB	x	F	
	80.00		95.00		16.00	

80.00

Part No	RUC 0800 1000 130					
Groove Dimension	ØA	x	ØB	x	F	
	80.00		100.00		13.00	

80.00

Part No	RUC 0800 1000 160					
Groove Dimension	ØA	x	ØB	x	F	
	80.00		100.00		16.00	

82.50

Part No	RUC 0825 0975 130					
Groove Dimension	ØA	x	ØB	x	F	
	82.50		97.50		13.00	

85.00

Part No	RUC 0850 0925 100					
Groove Dimension	ØA	x	ØB	x	F	
	85.00		92.50		10.00	

85.00

Part No	RUC 0850 0930 110					
Groove Dimension	ØA	x	ØB	x	F	
	85.00		93.00		11.00	

85.00

Part No	RUC 0850 0930 125					
Groove Dimension	ØA	x	ØB	x	F	
	85.00		93.00		12.50	

85.00

Part No	RUC 0850 1000 125					
Groove Dimension	ØA	x	ØB	x	F	
	85.00		100.00		12.50	

85.00

Part No	RUC 0850 1050 130					
Groove Dimension	ØA	x	ØB	x	F	
	85.00		105.00		13.00	

85.00

Part No	RUC 0850 1050 145					
Groove Dimension	ØA	x	ØB	x	F	
	85.00		105.00		14.50	

87.00

Part No	RUC 0870 0950 125					
Groove Dimension	ØA	x	ØB	x	F	
	87.00		95.00		12.50	

89.00

Part No	RUC 0890 0970 125					
Groove Dimension	ØA	x	ØB	x	F	
	89.00		97.00		12.50	

90.00

Part No	RUC 0900 0980 125		
Groove Dimension	ØA	ØB	F
	90.00	98.00	12.50

90.00

Part No	RUC 0900 1000 080		
Groove Dimension	ØA	ØB	F
	90.00	100.00	8.00

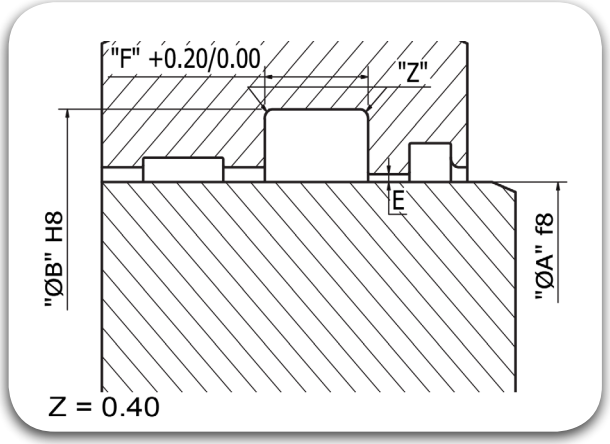

90.00

Part No	RUC 0900 1000 125		
Groove Dimension	ØA	ØB	F
	90.00	100.00	12.50

90.00

Part No	RUC 0900 1050 125		
Groove Dimension	ØA	ØB	F
	90.00	105.00	12.50

90.00

Part No	RUC 0900 1050 130		
Groove Dimension	ØA	ØB	F
	90.00	105.00	13.00

90.00

Part No	RUC 0900 1100 130		
Groove Dimension	ØA	ØB	F
	90.00	110.00	13.00

90.00

Part No	RUC 0900 1100 150		
Groove Dimension	ØA	ØB	F
	90.00	110.00	15.00

90.00

Part No	RUC 0900 1100 160		
Groove Dimension	ØA	ØB	F
	90.00	110.00	16.00

90.00

Part No	RUC 0900 1100 160		
Groove Dimension	ØA	ØB	F
	90.00	110.00	16.00

93.00

Part No	RUC 0930 1010 125		
Groove Dimension	ØA	ØB	F
	93.00	101.00	12.50

95.00

Part No	RUC 0950 1030 080		
Groove Dimension	ØA	ØB	F
	95.00	103.00	8.00

95.00

Part No	RUC 0950 1030 125		
Groove Dimension	ØA	ØB	F
	95.00	103.00	12.50

95.00

Part No	RUC 0950 1050 095		
Groove Dimension	ØA	ØB	F
	95.00	105.00	9.50

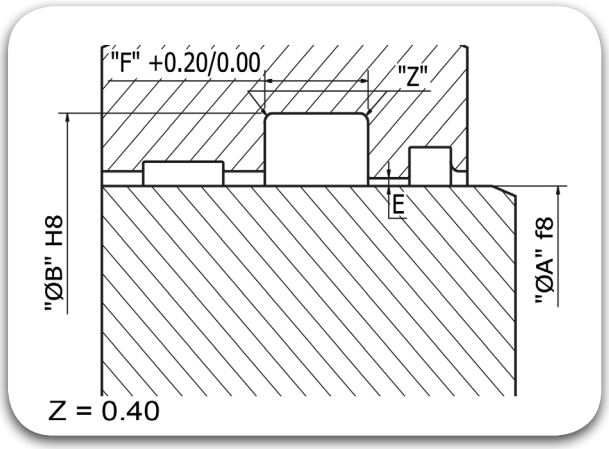

95.00

Part No	RUC 0950 1050 130				
Groove Dimension	ØA	x	ØB	x	F
	95.00		105.00		13.00

95.00

Part No	RUC 0950 1100 125				
Groove Dimension	ØA	x	ØB	x	F
	95.00		110.00		12.50

95.00

Part No	RUC 0950 1100 130				
Groove Dimension	ØA	x	ØB	x	F
	95.00		110.00		13.00

97.00

Part No	RUC 0970 1050 125				
Groove Dimension	ØA	x	ØB	x	F
	97.00		105.00		12.50

97.00

Part No	RUC 0970 1050 140				
Groove Dimension	ØA	x	ØB	x	F
	97.00		105.00		14.00

97.00

Part No	RUC 0970 1050 145				
Groove Dimension	ØA	x	ØB	x	F
	97.00		105.00		14.50

97.00

Part No	RUC 0970 1060 150				
Groove Dimension	ØA	x	ØB	x	F
	97.00		106.00		15.00

99.00

Part No	RUC 0990 1090 130				
Groove Dimension	ØA	x	ØB	x	F
	99.00		109.00		13.00

100.00

Part No	RUC 1000 1080 125				
Groove Dimension	ØA	x	ØB	x	F
	100.00		108.00		12.50

100.00

Part No	RUC 1000 1100 110				
Groove Dimension	ØA	x	ØB	x	F
	100.00		110.00		11.00

100.00

Part No	RUC 1000 1100 125				
Groove Dimension	ØA	x	ØB	x	F
	100.00		110.00		12.50

100.00

Part No	RUC 1000 1150 110				
Groove Dimension	ØA	x	ØB	x	F
	100.00		115.00		11.00

100.00

Part No	RUC 1000 1150 130				
Groove Dimension	ØA	x	ØB	x	F
	100.00		115.00		13.00

100.00

Part No	RUC 1000 1150 160					
Groove Dimension	ØA	x	ØB	x	F	
	100.00		115.00		16.00	

100.00

Part No	RUC 1000 1200 130					
Groove Dimension	ØA	x	ØB	x	F	
	100.00		120.00		13.00	

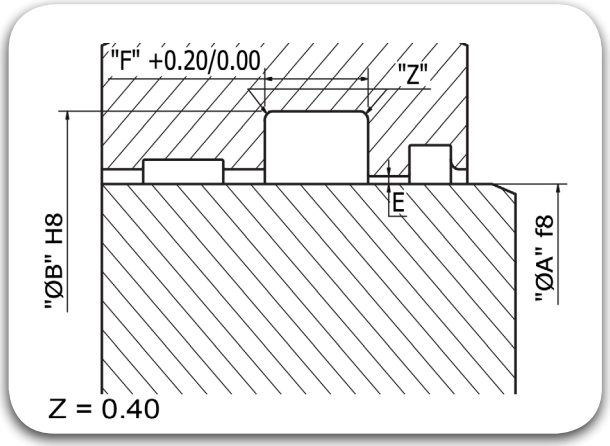

100.00

Part No	RUC 1000 1200 145					
Groove Dimension	ØA	x	ØB	x	F	
	100.00		120.00		14.50	

100.00

Part No	RUC 1000 1200 160					
Groove Dimension	ØA	x	ØB	x	F	
	100.00		120.00		16.00	

100.00

Part No	RUC 1000 1200 160					
Groove Dimension	ØA	x	ØB	x	F	
	100.00		120.00		16.00	

105.00

Part No	RUC 1050 1130 080					
Groove Dimension	ØA	x	ØB	x	F	
	105.00		113.00		8.00	

105.00

Part No	RUC 1050 1130 125					
Groove Dimension	ØA	x	ØB	x	F	
	105.00		113.00		12.50	

105.00

Part No	RUC 1050 1150 125					
Groove Dimension	ØA	x	ØB	x	F	
	105.00		115.00		12.50	

105.00

Part No	RUC 1050 1200 100					
Groove Dimension	ØA	x	ØB	x	F	
	105.00		120.00		10.00	

105.00

Part No	RUC 1050 1250 130					
Groove Dimension	ØA	x	ØB	x	F	
	105.00		125.00		13.00	

108.00

Part No	RUC 1080 1160 125					
Groove Dimension	ØA	x	ØB	x	F	
	108.00		116.00		12.50	

110.00

Part No	RUC 1100 1180 125					
Groove Dimension	ØA	x	ØB	x	F	
	110.00		118.00		12.50	

110.00

Part No	RUC 1100 1200 115					
Groove Dimension	ØA	x	ØB	x	F	
	110.00		120.00		11.50	

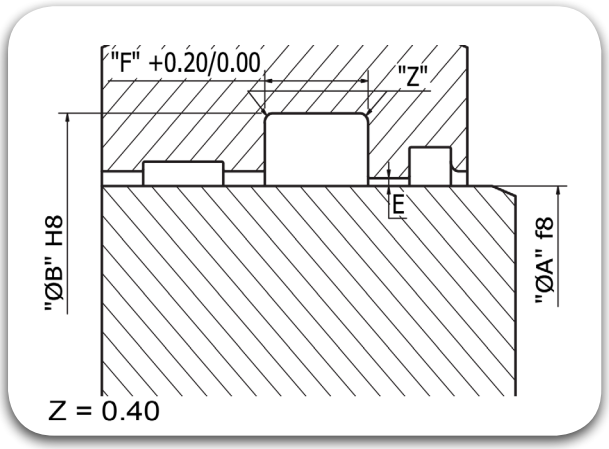

110.00

Part No	RUC 1100 1250 106		
Groove Dimension	ØA	ØB	F
	110.00	125.00	10.60

110.00

Part No	RUC 1100 1250 160		
Groove Dimension	ØA	ØB	F
	110.00	125.00	16.00

110.00

Part No	RUC 1100 1300 130		
Groove Dimension	ØA	ØB	F
	110.00	130.00	13.00

110.00

Part No	RUC 1100 1300 160		
Groove Dimension	ØA	ØB	F
	110.00	130.00	16.00

110.00

Part No	RUC 1100 1300 160		
Groove Dimension	ØA	ØB	F
	110.00	130.00	16.00

112.00

Part No	RUC 1120 1220 110		
Groove Dimension	ØA	ØB	F
	112.00	122.00	11.00

115.00

Part No	RUC 1150 1230 125		
Groove Dimension	ØA	ØB	F
	115.00	123.00	12.50

115.00

Part No	RUC 1150 1250 130		
Groove Dimension	ØA	ØB	F
	115.00	125.00	13.00

115.00

Part No	RUC 1150 1250 130		
Groove Dimension	ØA	ØB	F
	115.00	125.00	15.00

115.00

Part No	RUC 1150 1300 110		
Groove Dimension	ØA	ØB	F
	115.00	130.00	11.00

117.00

Part No	RUC 1170 1330 100		
Groove Dimension	ØA	ØB	F
	117.00	133.00	10.00

118.00

Part No	RUC 1180 1260 125		
Groove Dimension	ØA	ØB	F
	118.00	126.00	12.50

118.00

Part No	RUC 1180 1260 140		
Groove Dimension	ØA	ØB	F
	118.00	126.00	14.00

118.00

Part No	RUC 1180 1260 145		
Groove Dimension	ØA	ØB	F
	118.00	126.00	14.50

120.00

Part No	RUC 1200 1280 125		
Groove Dimension	ØA	ØB	F
	120.00	128.00	12.50

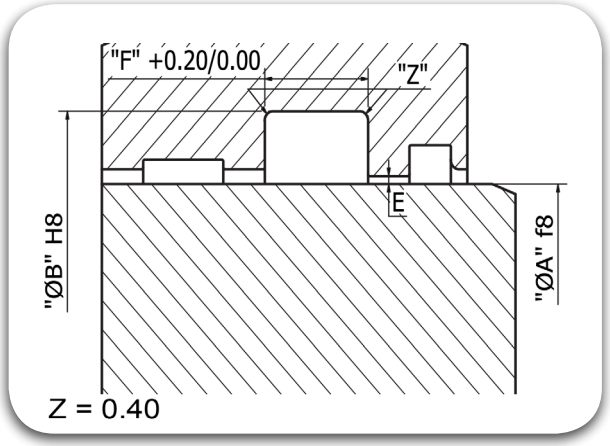

120.00

Part No	RUC 1200 1300 125		
Groove Dimension	ØA	ØB	F
	120.00	130.00	12.50

120.00

Part No	RUC 1200 1300 130		
Groove Dimension	ØA	ØB	F
	120.00	130.00	13.00

120.00

Part No	RUC 1200 1350 160		
Groove Dimension	ØA	ØB	F
	120.00	135.00	16.00

120.00

Part No	RUC 1200 1400 130		
Groove Dimension	ØA	ØB	F
	120.00	140.00	13.00

120.00

Part No	RUC 1200 1400 160		
Groove Dimension	ØA	ØB	F
	120.00	140.00	16.00

125.00

Part No	RUC 1250 1330 125		
Groove Dimension	ØA	ØB	F
	125.00	133.00	12.50

125.00

Part No	RUC 1250 1350 110		
Groove Dimension	ØA	ØB	F
	125.00	135.00	11.00

125.00

Part No	RUC 1250 1400 125		
Groove Dimension	ØA	ØB	F
	125.00	140.00	12.50

125.00

Part No	RUC 1250 1450 130		
Groove Dimension	ØA	ØB	F
	125.00	145.00	13.00

125.00

Part No	RUC 1250 1450 160		
Groove Dimension	ØA	ØB	F
	125.00	145.00	16.00

125.00

Part No	RUC 1250 1450 160		
Groove Dimension	ØA	ØB	F
	125.00	145.00	16.00

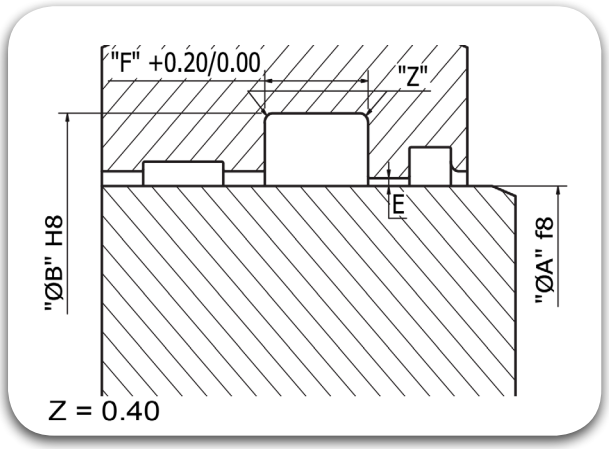

125.00

Part No	RUC 1250 1500 200					
Groove Dimension	ØA	x	ØB	x	F	
	125.00		150.00		20.00	

127.00

Part No	RUC 1270 1400 125					
Groove Dimension	ØA	x	ØB	x	F	
	127.00		140.00		12.50	

128.00

Part No	RUC 1280 1360 125					
Groove Dimension	ØA	x	ØB	x	F	
	128.00		136.00		12.50	

130.00

Part No	RUC 1300 1380 125					
Groove Dimension	ØA	x	ØB	x	F	
	130.00		138.00		12.50	

130.00

Part No	RUC 1300 1450 160					
Groove Dimension	ØA	x	ØB	x	F	
	130.00		145.00		16.00	

130.00

Part No	RUC 1300 1500 135					
Groove Dimension	ØA	x	ØB	x	F	
	130.00		150.00		13.50	

130.00

Part No	RUC 1300 1500 160					
Groove Dimension	ØA	x	ØB	x	F	
	130.00		150.00		16.00	

132.00

Part No	RUC 1320 1420 095					
Groove Dimension	ØA	x	ØB	x	F	
	132.00		142.00		9.50	

135.00

Part No	RUC 1350 1430 125					
Groove Dimension	ØA	x	ØB	x	F	
	135.00		143.00		12.50	

135.00

Part No	RUC 1350 1500 125					
Groove Dimension	ØA	x	ØB	x	F	
	135.00		150.00		12.50	

135.00

Part No	RUC 1350 1500 160					
Groove Dimension	ØA	x	ØB	x	F	
	135.00		150.00		16.00	

140.00

Part No	RUC 1400 1480 125					
Groove Dimension	ØA	x	ØB	x	F	
	140.00		148.00		12.50	

140.00

Part No	RUC 1400 1500 125					
Groove Dimension	ØA	x	ØB	x	F	
	140.00		150.00		12.50	

140.00

Part No	RUC 1400 1550 106		
Groove Dimension	ØA	ØB	F
	140.00	155.00	10.60

140.00

Part No	RUC 1400 1600 160		
Groove Dimension	ØA	ØB	F
	140.00	160.00	16.00

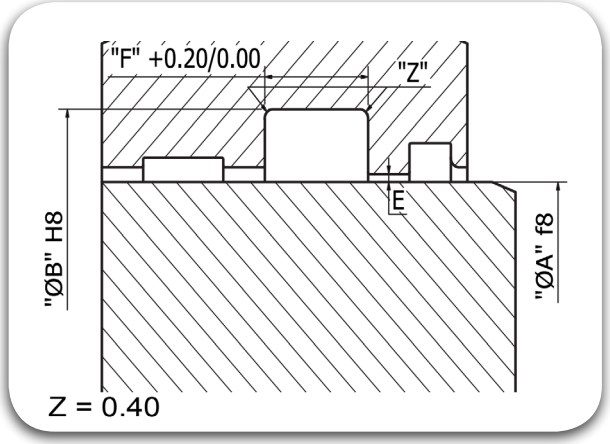

140.00

Part No	RUC 1400 1600 160		
Groove Dimension	ØA	ØB	F
	140.00	160.00	16.00

141.00

Part No	RUC 1410 1510 130		
Groove Dimension	ØA	ØB	F
	141.00	151.00	13.00

143.00

Part No	RUC 1430 1510 125		
Groove Dimension	ØA	ØB	F
	143.00	151.00	12.50

143.00

Part No	RUC 1430 1510 145		
Groove Dimension	ØA	ØB	F
	143.00	151.00	14.50

143.00

Part No	RUC 1430 1510 145		
Groove Dimension	ØA	ØB	F
	143.00	151.00	14.50

145.00

Part No	RUC 1450 1530 125		
Groove Dimension	ØA	ØB	F
	145.00	153.00	12.50

145.00

Part No	RUC 1450 1550 130		
Groove Dimension	ØA	ØB	F
	145.00	155.00	13.00

145.00

Part No	RUC 1450 1600 130		
Groove Dimension	ØA	ØB	F
	145.00	160.00	13.00

148.00

Part No	RUC 1480 1600 130		
Groove Dimension	ØA	ØB	F
	148.00	160.00	13.00

150.00

Part No	RUC 1500 1650 160		
Groove Dimension	ØA	ØB	F
	150.00	165.00	16.00

150.00

Part No	RUC 1500 1700 160		
Groove Dimension	ØA	ØB	F
	150.00	170.00	16.00

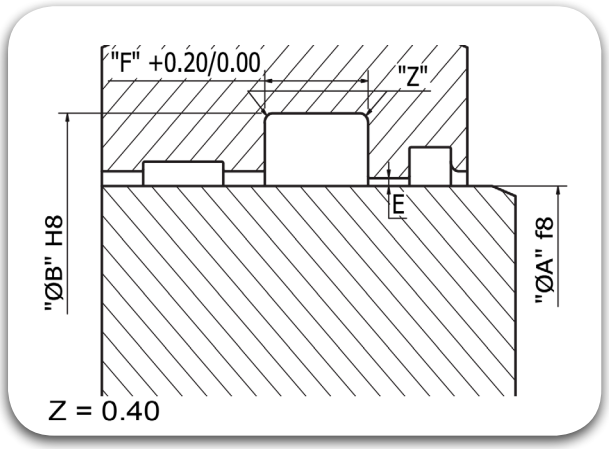

152.00

Part No	RUC 1520 1600 125					
Groove Dimension	ØA	x	ØB	x	F	
	152.00		160.00		12.50	

152.00

Part No	RUC 1520 1620 110					
Groove Dimension	ØA	x	ØB	x	F	
	152.00		162.00		11.00	

155.00

Part No	RUC 1550 1630 125					
Groove Dimension	ØA	x	ØB	x	F	
	155.00		163.00		12.50	

160.00

Part No	RUC 1600 1680 125					
Groove Dimension	ØA	x	ØB	x	F	
	160.00		168.00		12.50	

160.00

Part No	RUC 1600 1700 125					
Groove Dimension	ØA	x	ØB	x	F	
	160.00		170.00		12.50	

160.00

Part No	RUC 1600 1750 160					
Groove Dimension	ØA	x	ØB	x	F	
	160.00		175.00		16.00	

160.00

Part No	RUC 1600 1770 160					
Groove Dimension	ØA	x	ØB	x	F	
	160.00		177.00		16.00	

162.00

Part No	RUC 1620 1720 130					
Groove Dimension	ØA	x	ØB	x	F	
	162.00		172.00		13.00	

165.00

Part No	RUC 1650 1840 140					
Groove Dimension	ØA	x	ØB	x	F	
	165.00		184.00		14.00	

170.00

Part No	RUC 1700 1780 125					
Groove Dimension	ØA	x	ØB	x	F	
	170.00		178.00		12.50	

170.00

Part No	RUC 1700 1800 130					
Groove Dimension	ØA	x	ØB	x	F	
	170.00		180.00		13.00	

170.00

Part No	RUC 1700 1850 160					
Groove Dimension	ØA	x	ØB	x	F	
	170.00		185.00		16.00	

170.00

Part No	RUC 1700 1900 160					
Groove Dimension	ØA	x	ØB	x	F	
	170.00		190.00		16.00	

170.00

Part No	RUC 1700 1900 160		
Groove Dimension	ØA	ØB	F
	170.00	190.00	16.00

171.00

Part No	RUC 1710 1790 125		
Groove Dimension	ØA	ØB	F
	171.00	179.00	12.50

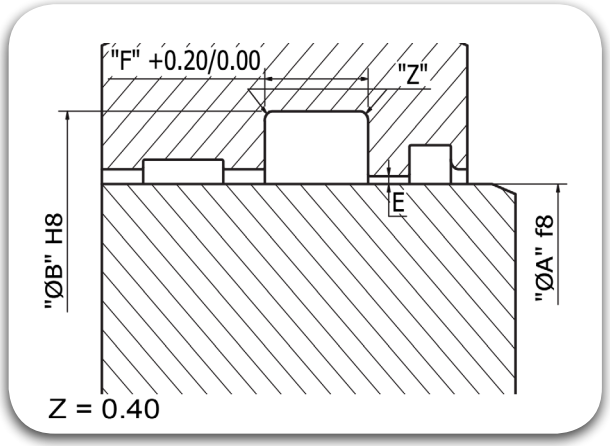

171.00

Part No	RUC 1710 1790 140		
Groove Dimension	ØA	ØB	F
	171.00	179.00	14.00

171.50

Part No	RUC 1715 1795 125		
Groove Dimension	ØA	ØB	F
	171.50	179.50	12.50

175.00

Part No	RUC 1750 1855 130		
Groove Dimension	ØA	ØB	F
	175.00	185.50	13.00

178.00

Part No	RUC 1780 1880 110		
Groove Dimension	ØA	ØB	F
	178.00	188.00	11.00

180.00

Part No	RUC 1800 1880 145		
Groove Dimension	ØA	ØB	F
	180.00	188.00	14.50

180.00

Part No	RUC 1800 1900 110		
Groove Dimension	ØA	ØB	F
	180.00	190.00	11.00

180.00

Part No	RUC 1800 1900 125		
Groove Dimension	ØA	ØB	F
	180.00	190.00	12.50

180.00

Part No	RUC 1800 1950 125		
Groove Dimension	ØA	ØB	F
	180.00	195.00	12.50

180.00

Part No	RUC 1800 1950 135		
Groove Dimension	ØA	ØB	F
	180.00	195.00	13.50

180.00

Part No	RUC 1800 2000 160		
Groove Dimension	ØA	ØB	F
	180.00	200.00	16.00

180.00

Part No	RUC 1800 2000 160		
Groove Dimension	ØA	ØB	F
	180.00	200.00	16.00

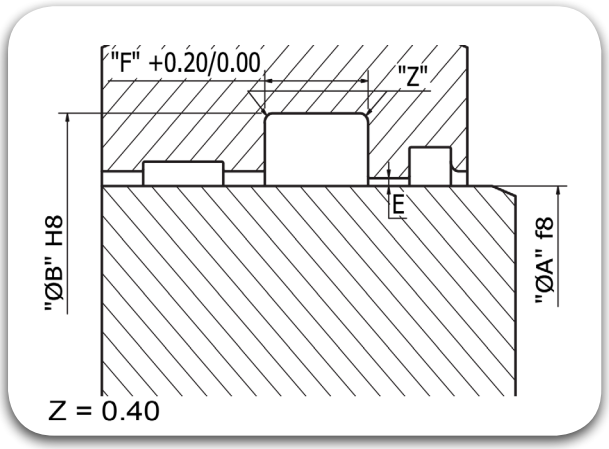

180.00

Part No	RUC 1800 2050 160					
Groove Dimension	ØA	x	ØB	x	F	
	180.00		205.00		16.00	

185.00

Part No	RUC 1850 1930 125					
Groove Dimension	ØA	x	ØB	x	F	
	185.00		193.00		12.50	

190.00

Part No	RUC 1900 2100 160					
Groove Dimension	ØA	x	ØB	x	F	
	190.00		210.00		16.00	

200.00

Part No	RUC 2000 2080 125					
Groove Dimension	ØA	x	ØB	x	F	
	200.00		208.00		12.50	

200.00

Part No	RUC 2000 2200 160					
Groove Dimension	ØA	x	ØB	x	F	
	200.00		220.00		16.00	

200.00

Part No	RUC 2000 2250 160					
Groove Dimension	ØA	x	ØB	x	F	
	200.00		225.00		16.00	

202.00

Part No	RUC 2020 2120 145					
Groove Dimension	ØA	x	ØB	x	F	
	202.00		212.00		14.50	

205.00

Part No	RUC 2050 2200 125					
Groove Dimension	ØA	x	ØB	x	F	
	205.00		220.00		12.50	

210.00

Part No	RUC 2100 2300 160					
Groove Dimension	ØA	x	ØB	x	F	
	210.00		230.00		16.00	

212.00

Part No	RUC 2120 2200 145					
Groove Dimension	ØA	x	ØB	x	F	
	212.00		220.00		14.50	

220.00

Part No	RUC 2200 2350 160					
Groove Dimension	ØA	x	ØB	x	F	
	220.00		235.00		16.00	

Rod Seals

RAB

TRIADA
TECHNOLOGIES

#SealingExcellence




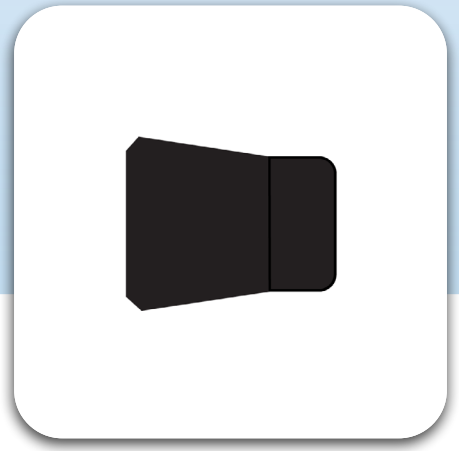

Description

The RAB type seal is a compact rod seal which possess an excellent sealing performance even at the low pressure due to the radial preload; the material used for this seal provides high wear resistance and good chemical resistance.

Diameter Range	Ø4.70 – Ø445.00
Standard material	TRIAFLEX® T543 (Cotton fabric reinforced material)
Temperature(°C)	-30° C to 130° C
Speed	≤ 0.50 m/s
Fluids	Mineral Hydraulic Fluids (for other media, please contact TRIADA® Application Engineering)
Pressure	≤ 250 bar

Reciprocating | Oscillating | Rotary | Helix | Static | Single Acting | Double Acting

Material Details

Seal Material	Seal Material Code
TRIAFLEX® cotton fabric reinforced material impregnated with NBR 70 Shores A	T543

Nomenclature

Part No	RAB	0160	0240	064	T543
	Seal profile	Rod Dia x 10	Groove Dia x 10	Groove Width x 10	Seal Material Code

Groove Details

Operating Pressure (Bar)	Radial Clearance "E" max
160	0.20
250	0.10

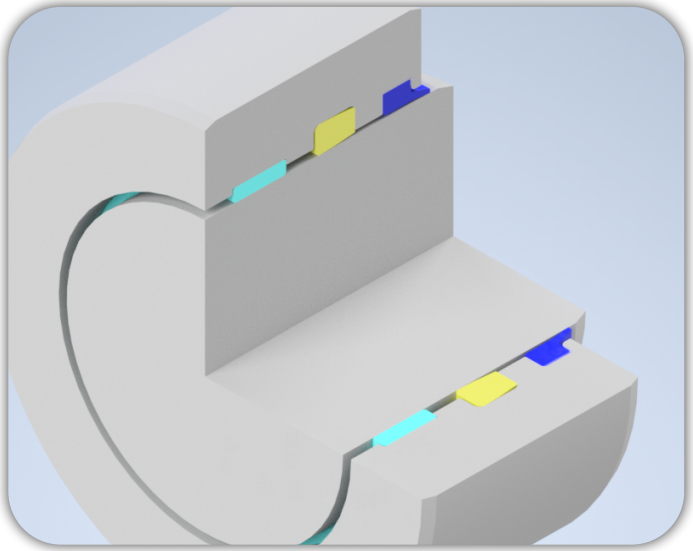

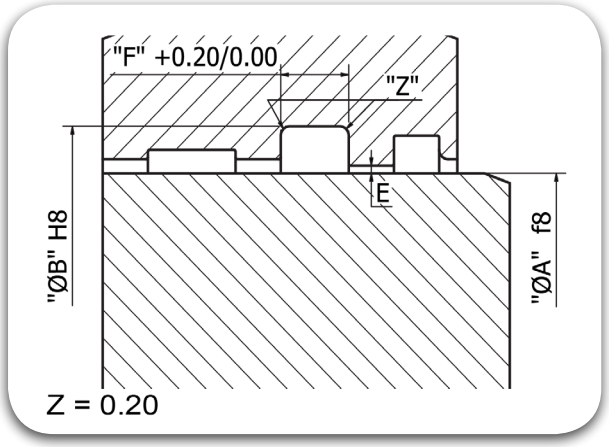

4.76

Part No	RAB 0047 0127 064				
Groove Dimension	ØA	x	ØB	x	F
	4.76		12.70		6.40

6.00

Part No	RAB 0060 0100 050				
Groove Dimension	ØA	x	ØB	x	F
	6.00		10.00		5.00

6.00

Part No	RAB 0060 0140 064				
Groove Dimension	ØA	x	ØB	x	F
	6.00		14.00		6.40

6.35

Part No	RAB 0063 0142 068				
Groove Dimension	ØA	x	ØB	x	F
	6.35		14.28		6.85

8.00

Part No	RAB 0080 0150 064				
Groove Dimension	ØA	x	ØB	x	F
	8.00		15.00		6.40

10.00

Part No	RAB 0100 0170 064				
Groove Dimension	ØA	x	ØB	x	F
	10.00		17.00		6.40

10.00

Part No	RAB 0100 0180 060				
Groove Dimension	ØA	x	ØB	x	F
	10.00		18.00		6.00

11.00

Part No	RAB 0110 0206 076				
Groove Dimension	ØA	x	ØB	x	F
	11.00		20.63		7.65

12.00

Part No	RAB 0120 0180 075				
Groove Dimension	ØA	x	ØB	x	F
	12.00		18.00		7.50

12.00

Part No	RAB 0120 0190 063				
Groove Dimension	ØA	x	ØB	x	F
	12.00		19.00		6.30

12.00

Part No	RAB 0120 0200 064				
Groove Dimension	ØA	x	ØB	x	F
	12.00		20.00		6.40

12.70

Part No	RAB 0127 0190 052				
Groove Dimension	ØA	x	ØB	x	F
	12.70		19.05		5.25

12.70

Part No	RAB 0127 0206 068				
Groove Dimension	ØA	x	ØB	x	F
	12.70		20.63		6.85

12.70

Part No	RAB 0127 0222 076
Groove Dimension	ØA 12.70 x ØB 22.22 x F 7.65

14.00

Part No	RAB 0140 0220 065
Groove Dimension	ØA 14.00 x ØB 22.00 x F 6.50

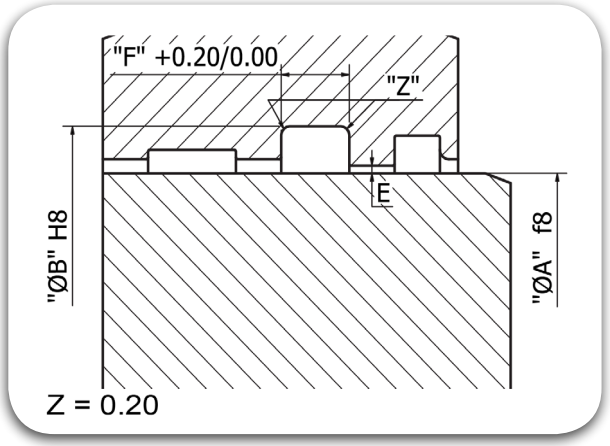

14.28

Part No	RAB 0142 0238 076
Groove Dimension	ØA 14.28 x ØB 23.81 x F 7.65

15.00

Part No	RAB 0150 0230 064
Groove Dimension	ØA 15.00 x ØB 23.00 x F 6.40

15.87

Part No	RAB 0158 0222 052
Groove Dimension	ØA 15.87 x ØB 22.22 x F 5.25

15.87

Part No	RAB 0158 0254 076
Groove Dimension	ØA 15.87 x ØB 25.40 x F 7.65

16.00

Part No	RAB 0160 0240 064
Groove Dimension	ØA 16.00 x ØB 24.00 x F 6.40

16.00

Part No	RAB 0160 0240 070
Groove Dimension	ØA 16.00 x ØB 24.00 x F 7.00

17.46

Part No	RAB 0174 0301 100
Groove Dimension	ØA 17.46 x ØB 30.16 x F 10.00

18.00

Part No	RAB 0180 0250 080
Groove Dimension	ØA 18.00 x ØB 25.00 x F 8.00

18.00

Part No	RAB 0180 0260 064
Groove Dimension	ØA 18.00 x ØB 26.00 x F 6.40

18.00

Part No	RAB 0180 0260 070
Groove Dimension	ØA 18.00 x ØB 26.00 x F 7.00

18.00

Part No	RAB 0180 0280 063
Groove Dimension	ØA 18.00 x ØB 28.00 x F 6.30

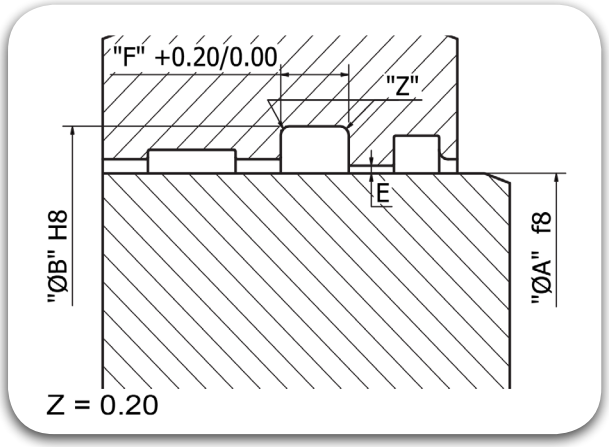

19.05

Part No	RAB 0190 0285 090					
Groove Dimension	ØA	x	ØB	x	F	
	19.05		28.58		9.00	

19.05

Part No	RAB 0190 0317 085					
Groove Dimension	ØA	x	ØB	x	F	
	19.05		31.75		8.50	

20.00

Part No	RAB 0200 0270 065					
Groove Dimension	ØA	x	ØB	x	F	
	20.00		27.00		6.50	

20.00

Part No	RAB 0200 0280 063					
Groove Dimension	ØA	x	ØB	x	F	
	20.00		28.00		6.30	

20.00

Part No	RAB 0200 0280 070					
Groove Dimension	ØA	x	ØB	x	F	
	20.00		28.00		7.00	

20.00

Part No	RAB 0200 0300 085					
Groove Dimension	ØA	x	ØB	x	F	
	20.00		30.00		8.50	

20.00

Part No	RAB 0200 0350 115					
Groove Dimension	ØA	x	ØB	x	F	
	20.00		35.00		11.50	

20.63

Part No	RAB 0206 0333 100					
Groove Dimension	ØA	x	ØB	x	F	
	20.63		33.33		10.00	

22.00

Part No	RAB 0220 0300 065					
Groove Dimension	ØA	x	ØB	x	F	
	22.00		30.00		6.50	

22.00

Part No	RAB 0220 0300 070					
Groove Dimension	ØA	x	ØB	x	F	
	22.00		30.00		7.00	

22.00

Part No	RAB 0220 0350 100					
Groove Dimension	ØA	x	ØB	x	F	
	22.00		35.00		10.00	

22.22

Part No	RAB 0222 0317 092					
Groove Dimension	ØA	x	ØB	x	F	
	22.22		31.75		9.20	

23.81

Part No	RAB 0238 0365 100					
Groove Dimension	ØA	x	ØB	x	F	
	23.81		36.51		10.00	

24.00

Part No	RAB 0240 0320 075					
Groove Dimension	ØA	x	ØB	x	F	
	24.00		32.00		7.50	

24.00

Part No	RAB 0240 0340 065					
Groove Dimension	ØA	x	ØB	x	F	
	24.00		34.00		6.50	

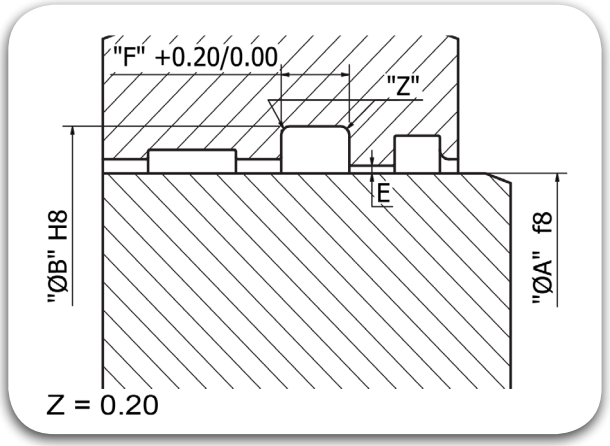

25.00

Part No	RAB 0250 0330 064					
Groove Dimension	ØA	x	ØB	x	F	
	25.00		33.00		6.40	

25.00

Part No	RAB 0250 0350 090					
Groove Dimension	ØA	x	ØB	x	F	
	25.00		35.00		9.00	

25.00

Part No	RAB 0250 0380 100					
Groove Dimension	ØA	x	ØB	x	F	
	25.00		38.00		10.00	

25.00

Part No	RAB 0250 0440 125					
Groove Dimension	ØA	x	ØB	x	F	
	25.00		44.00		12.50	

25.40

Part No	RAB 0254 0317 052					
Groove Dimension	ØA	x	ØB	x	F	
	25.40		31.75		5.25	

25.40

Part No	RAB 0254 0349 068					
Groove Dimension	ØA	x	ØB	x	F	
	25.40		34.92		6.85	

25.40

Part No	RAB 0254 0381 100					
Groove Dimension	ØA	x	ØB	x	F	
	25.40		38.10		10.00	

25.40

Part No	RAB 0254 0412 116					
Groove Dimension	ØA	x	ØB	x	F	
	25.40		41.27		11.60	

26.00

Part No	RAB 0260 0400 100					
Groove Dimension	ØA	x	ØB	x	F	
	26.00		40.00		10.00	

27.00

Part No	RAB 0270 0350 065					
Groove Dimension	ØA	x	ØB	x	F	
	27.00		35.00		6.50	

28.00

Part No	RAB 0280 0360 064					
Groove Dimension	ØA	x	ØB	x	F	
	28.00		36.00		6.40	

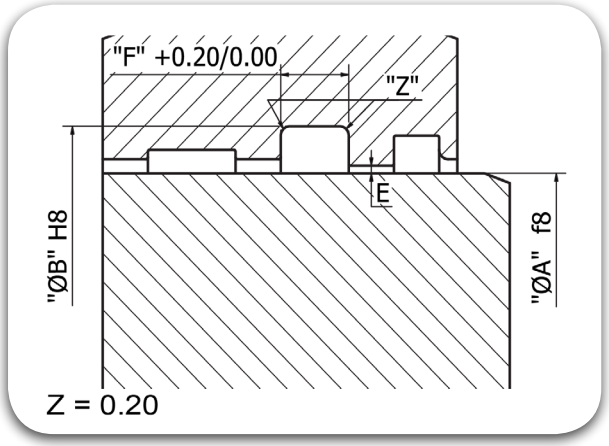

28.19

Part No	RAB 0281 0396 080				
Groove Dimension	ØA	x	ØB	x	F
	28.19		39.68		8.00

28.57

Part No	RAB 0285 0412 100				
Groove Dimension	ØA	x	ØB	x	F
	28.57		41.27		10.00

28.57

Part No	RAB 0285 0444 116				
Groove Dimension	ØA	x	ØB	x	F
	28.57		44.45		11.60

30.00

Part No	RAB 0300 0375 065				
Groove Dimension	ØA	x	ØB	x	F
	30.00		37.50		6.50

30.00

Part No	RAB 0300 0380 064				
Groove Dimension	ØA	x	ØB	x	F
	30.00		38.00		6.40

30.00

Part No	RAB 0300 0400 075				
Groove Dimension	ØA	x	ØB	x	F
	30.00		40.00		7.50

30.00

Part No	RAB 0300 0416 080				
Groove Dimension	ØA	x	ØB	x	F
	30.00		41.60		8.00

30.00

Part No	RAB 0300 0450 090				
Groove Dimension	ØA	x	ØB	x	F
	30.00		45.00		9.00

30.00

Part No	RAB 0300 0500 145				
Groove Dimension	ØA	x	ØB	x	F
	30.00		50.00		14.50

31.75

Part No	RAB 0317 0476 116				
Groove Dimension	ØA	x	ØB	x	F
	31.75		47.62		11.60

32.00

Part No	RAB 0320 0400 063				
Groove Dimension	ØA	x	ØB	x	F
	32.00		40.00		6.30

32.00

Part No	RAB 0320 0400 090				
Groove Dimension	ØA	x	ØB	x	F
	32.00		40.00		9.00

34.92

Part No	RAB 0349 0508 085				
Groove Dimension	ØA	x	ØB	x	F
	34.92		50.80		8.50

34.92

Part No	RAB 0349 0508 100					
Groove Dimension	ØA	x	ØB	x	F	
	34.92		50.80		10.00	

34.92

Part No	RAB 0349 0508 116					
Groove Dimension	ØA	x	ØB	x	F	
	34.92		50.80		11.60	

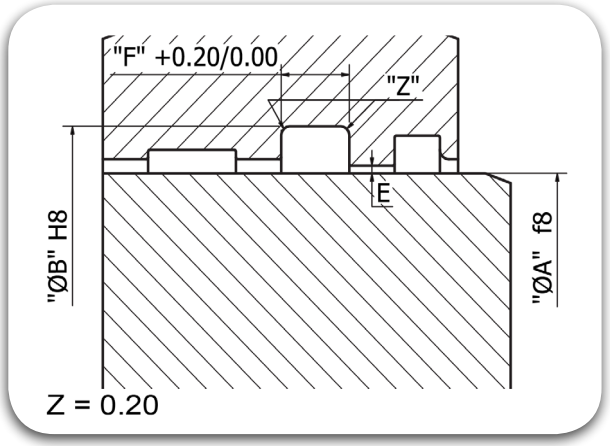

35.00

Part No	RAB 0350 0430 065					
Groove Dimension	ØA	x	ØB	x	F	
	35.00		43.00		6.50	

35.00

Part No	RAB 0350 0450 080					
Groove Dimension	ØA	x	ØB	x	F	
	35.00		45.00		8.00	

35.00

Part No	RAB 0350 0450 135					
Groove Dimension	ØA	x	ØB	x	F	
	35.00		45.00		13.50	

35.00

Part No	RAB 0350 0500 115					
Groove Dimension	ØA	x	ØB	x	F	
	35.00		50.00		11.50	

36.00

Part No	RAB 0360 0430 065					
Groove Dimension	ØA	x	ØB	x	F	
	36.00		43.00		6.50	

36.00

Part No	RAB 0360 0440 064					
Groove Dimension	ØA	x	ØB	x	F	
	36.00		44.00		6.40	

36.00

Part No	RAB 0360 0480 095					
Groove Dimension	ØA	x	ØB	x	F	
	36.00		48.00		9.50	

37.72

Part No	RAB 0377 0508 090					
Groove Dimension	ØA	x	ØB	x	F	
	37.72		50.80		9.00	

38.00

Part No	RAB 0380 0500 095					
Groove Dimension	ØA	x	ØB	x	F	
	38.00		50.00		9.50	

38.10

Part No	RAB 0381 0476 063					
Groove Dimension	ØA	x	ØB	x	F	
	38.10		47.62		6.35	

38.10

Part No	RAB 0381 0508 100					
Groove Dimension	ØA	x	ØB	x	F	
	38.10		50.80		10.00	

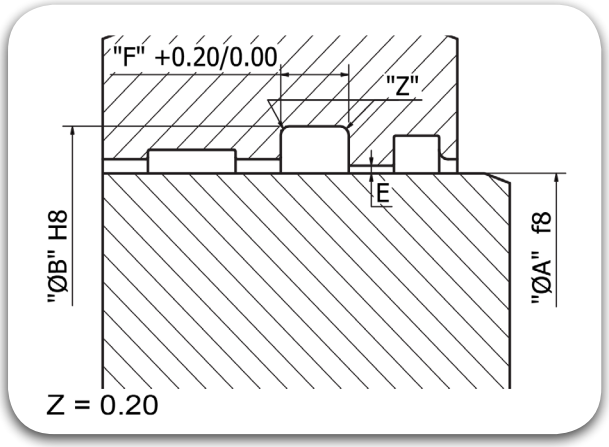

38.10

Part No	RAB 0381 0508 124					
Groove Dimension	ØA	x	ØB	x	F	
	38.10		50.80		12.40	

38.10

Part No	RAB 0381 0539 115					
Groove Dimension	ØA	x	ØB	x	F	
	38.10		53.97		11.50	

38.10

Part No	RAB 0381 0539 128					
Groove Dimension	ØA	x	ØB	x	F	
	38.10		53.97		12.83	

40.00

Part No	RAB 0400 0480 065					
Groove Dimension	ØA	x	ØB	x	F	
	40.00		48.00		6.50	

40.00

Part No	RAB 0400 0500 080					
Groove Dimension	ØA	x	ØB	x	F	
	40.00		50.00		8.00	

40.00

Part No	RAB 0400 0500 110					
Groove Dimension	ØA	x	ØB	x	F	
	40.00		50.00		11.00	

40.00

Part No	RAB 0400 0500 135					
Groove Dimension	ØA	x	ØB	x	F	
	40.00		50.00		13.50	

40.00

Part No	RAB 0400 0600 145					
Groove Dimension	ØA	x	ØB	x	F	
	40.00		60.00		14.50	

41.27

Part No	RAB 0412 0571 116					
Groove Dimension	ØA	x	ØB	x	F	
	41.27		57.12		11.60	

42.00

Part No	RAB 0420 0500 064					
Groove Dimension	ØA	x	ØB	x	F	
	42.00		50.00		6.40	

42.92

Part No	RAB 0429 0555 089					
Groove Dimension	ØA	x	ØB	x	F	
	42.92		55.50		8.90	

43.00

Part No	RAB 0430 0530 090					
Groove Dimension	ØA	x	ØB	x	F	
	43.00		53.00		9.00	

44.00

Part No	RAB 0440 0530 080					
Groove Dimension	ØA	x	ØB	x	F	
	44.00		53.00		8.00	

44.45

Part No	RAB 0444 0603 116					
Groove Dimension	ØA	x	ØB	x	F	
	44.45		60.32		11.60	

44.45

Part No	RAB 0444 0619 116					
Groove Dimension	ØA	x	ØB	x	F	
	44.45		61.91		11.60	

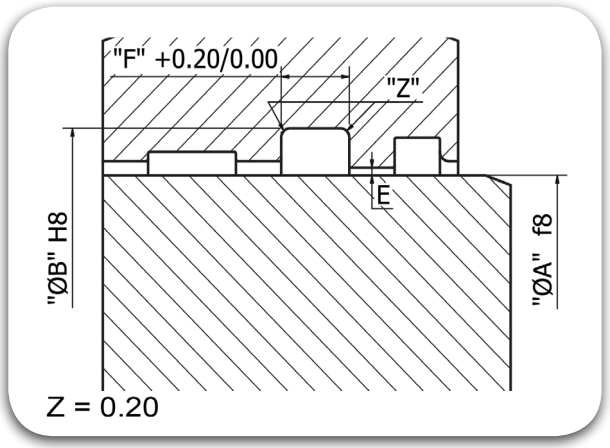

45.00

Part No	RAB 0450 0530 065					
Groove Dimension	ØA	x	ØB	x	F	
	45.00		53.00		6.50	

45.00

Part No	RAB 0450 0550 080					
Groove Dimension	ØA	x	ØB	x	F	
	45.00		55.00		8.00	

45.00

Part No	RAB 0450 0630 110					
Groove Dimension	ØA	x	ØB	x	F	
	45.00		63.00		11.00	

45.00

Part No	RAB 0450 0650 145					
Groove Dimension	ØA	x	ØB	x	F	
	45.00		65.00		14.50	

45.97

Part No	RAB 0459 0553 083					
Groove Dimension	ØA	x	ØB	x	F	
	45.97		55.37		8.33	

46.00

Part No	RAB 0460 0560 080					
Groove Dimension	ØA	x	ØB	x	F	
	46.00		56.00		8.00	

47.23

Part No	RAB 0472 0603 100					
Groove Dimension	ØA	x	ØB	x	F	
	47.23		60.32		10.00	

47.62

Part No	RAB 0476 0635 115					
Groove Dimension	ØA	x	ØB	x	F	
	47.62		63.50		11.50	

48.00

Part No	RAB 0480 0600 070					
Groove Dimension	ØA	x	ØB	x	F	
	48.00		60.00		7.00	

50.00

Part No	RAB 0500 0580 125					
Groove Dimension	ØA	x	ØB	x	F	
	50.00		58.00		12.50	

50.00

Part No	RAB 0500 0600 080					
Groove Dimension	ØA	x	ØB	x	F	
	50.00		60.00		8.00	

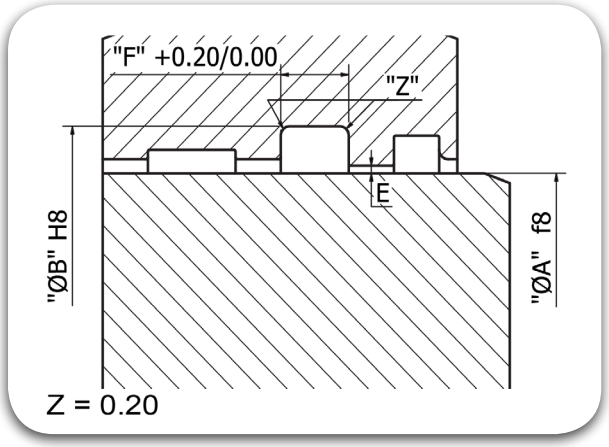

50.00

Part No	RAB 0500 0600 100					
Groove Dimension	ØA	x	ØB	x	F	
	50.00		60.00		10.00	

50.00

Part No	RAB 0500 0620 095					
Groove Dimension	ØA	x	ØB	x	F	
	50.00		62.00		9.50	

50.00

Part No	RAB 0500 0645 115					
Groove Dimension	ØA	x	ØB	x	F	
	50.00		64.50		11.50	

50.00

Part No	RAB 0500 0700 145					
Groove Dimension	ØA	x	ØB	x	F	
	50.00		70.00		14.50	

50.80

Part No	RAB 0508 0603 110					
Groove Dimension	ØA	x	ØB	x	F	
	50.80		60.35		11.00	

50.80

Part No	RAB 0508 0666 115					
Groove Dimension	ØA	x	ØB	x	F	
	50.80		66.67		11.50	

53.97

Part No	RAB 0539 0730 148					
Groove Dimension	ØA	x	ØB	x	F	
	53.97		73.02		14.80	

55.00

Part No	RAB 0550 0650 110					
Groove Dimension	ØA	x	ØB	x	F	
	55.00		65.00		11.00	

55.00

Part No	RAB 0550 0700 105					
Groove Dimension	ØA	x	ØB	x	F	
	55.00		70.00		10.50	

55.00

Part No	RAB 0550 0750 145					
Groove Dimension	ØA	x	ØB	x	F	
	55.00		75.00		14.50	

56.00

Part No	RAB 0560 0660 080					
Groove Dimension	ØA	x	ØB	x	F	
	56.00		66.00		8.00	

56.00

Part No	RAB 0560 0760 145					
Groove Dimension	ØA	x	ØB	x	F	
	56.00		76.00		14.50	

57.00

Part No	RAB 0570 0670 080					
Groove Dimension	ØA	x	ØB	x	F	
	57.00		67.00		8.00	

57.15

Part No	RAB 0571 0698 100					
Groove Dimension	ØA	x	ØB	x	F	
	57.15		69.85		10.00	

57.15

Part No	RAB 0571 0730 115					
Groove Dimension	ØA	x	ØB	x	F	
	57.15		73.02		11.50	

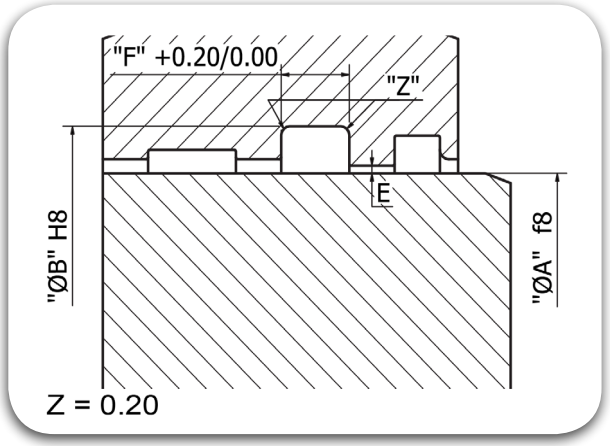

57.15

Part No	RAB 0571 0762 100					
Groove Dimension	ØA	x	ØB	x	F	
	57.15		76.20		10.00	

57.15

Part No	RAB 0571 0762 135					
Groove Dimension	ØA	x	ØB	x	F	
	57.15		76.20		13.50	

57.15

Part No	RAB 0571 0762 142					
Groove Dimension	ØA	x	ØB	x	F	
	57.15		76.20		14.28	

60.00

Part No	RAB 0600 0695 070					
Groove Dimension	ØA	x	ØB	x	F	
	60.00		69.50		7.00	

60.00

Part No	RAB 0600 0700 080					
Groove Dimension	ØA	x	ØB	x	F	
	60.00		70.00		8.00	

60.00

Part No	RAB 0600 0710 096					
Groove Dimension	ØA	x	ØB	x	F	
	60.00		71.00		9.60	

60.00

Part No	RAB 0600 0720 100					
Groove Dimension	ØA	x	ØB	x	F	
	60.00		72.00		10.00	

60.00

Part No	RAB 0600 0750 130					
Groove Dimension	ØA	x	ØB	x	F	
	60.00		75.00		13.00	

60.00

Part No	RAB 0600 0800 145					
Groove Dimension	ØA	x	ØB	x	F	
	60.00		80.00		14.50	

60.32

Part No	RAB 0603 0793 148					
Groove Dimension	ØA	x	ØB	x	F	
	60.32		79.37		14.80	

61.00

Part No	RAB 0610 0690 085					
Groove Dimension	ØA	x	ØB	x	F	
	61.00		69.00		8.50	

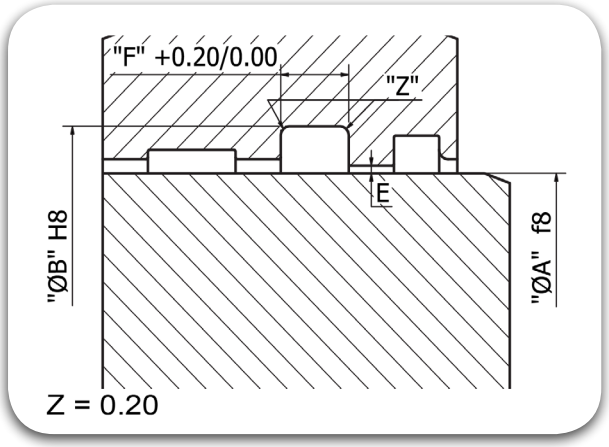

63.00

Part No	RAB 0630 0750 096		
Groove Dimension	ØA	ØB	F
	63.00	75.00	9.60

63.00

Part No	RAB 0630 0830 145		
Groove Dimension	ØA	ØB	F
	63.00	83.00	14.50

63.50

Part No	RAB 0635 0777 115		
Groove Dimension	ØA	ØB	F
	63.50	77.78	11.50

63.50

Part No	RAB 0635 0825 142		
Groove Dimension	ØA	ØB	F
	63.50	82.55	14.28

65.00

Part No	RAB 0650 0750 085		
Groove Dimension	ØA	ØB	F
	65.00	75.00	8.50

65.00

Part No	RAB 0650 0750 135		
Groove Dimension	ØA	ØB	F
	65.00	75.00	13.50

65.00

Part No	RAB 0650 0770 096		
Groove Dimension	ØA	ØB	F
	65.00	77.00	9.60

65.00

Part No	RAB 0650 0800 115		
Groove Dimension	ØA	ØB	F
	65.00	80.00	11.50

65.00

Part No	RAB 0650 0850 145		
Groove Dimension	ØA	ØB	F
	65.00	85.00	14.50

65.00

Part No	RAB 0650 0950 175		
Groove Dimension	ØA	ØB	F
	65.00	95.00	17.50

66.00

Part No	RAB 0660 0800 110		
Groove Dimension	ØA	ØB	F
	66.00	80.00	11.00

66.67

Part No	RAB 0666 0857 148		
Groove Dimension	ØA	ØB	F
	66.67	85.72	14.80

68.00

Part No	RAB 0680 0760 080		
Groove Dimension	ØA	ØB	F
	68.00	76.00	8.00

70.00

Part No	RAB 0700 0800 080					
Groove Dimension	ØA	x	ØB	x	F	
	70.00		80.00		8.00	

70.00

Part No	RAB 0700 0820 096					
Groove Dimension	ØA	x	ØB	x	F	
	70.00		82.00		9.60	

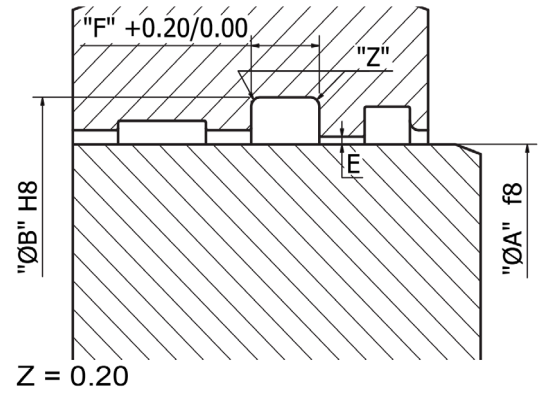

70.00

Part No	RAB 0700 0840 125					
Groove Dimension	ØA	x	ØB	x	F	
	70.00		84.00		12.50	

70.00

Part No	RAB 0700 0850 120					
Groove Dimension	ØA	x	ØB	x	F	
	70.00		85.00		12.00	

70.00

Part No	RAB 0700 0900 145					
Groove Dimension	ØA	x	ØB	x	F	
	70.00		90.00		14.50	

73.02

Part No	RAB 0730 0889 125					
Groove Dimension	ØA	x	ØB	x	F	
	73.02		88.90		12.50	

75.00

Part No	RAB 0750 0850 080					
Groove Dimension	ØA	x	ØB	x	F	
	75.00		85.00		8.00	

75.00

Part No	RAB 0750 0895 115					
Groove Dimension	ØA	x	ØB	x	F	
	75.00		89.50		11.50	

75.00

Part No	RAB 0750 0900 115					
Groove Dimension	ØA	x	ØB	x	F	
	75.00		90.00		11.50	

75.00

Part No	RAB 0750 0950 110					
Groove Dimension	ØA	x	ØB	x	F	
	75.00		95.00		11.00	

76.00

Part No	RAB 0760 0840 085					
Groove Dimension	ØA	x	ØB	x	F	
	76.00		84.00		8.50	

76.20

Part No	RAB 0762 0889 094					
Groove Dimension	ØA	x	ØB	x	F	
	76.20		88.90		9.40	

76.20

Part No	RAB 0762 0952 148					
Groove Dimension	ØA	x	ØB	x	F	
	76.20		95.25		14.80	

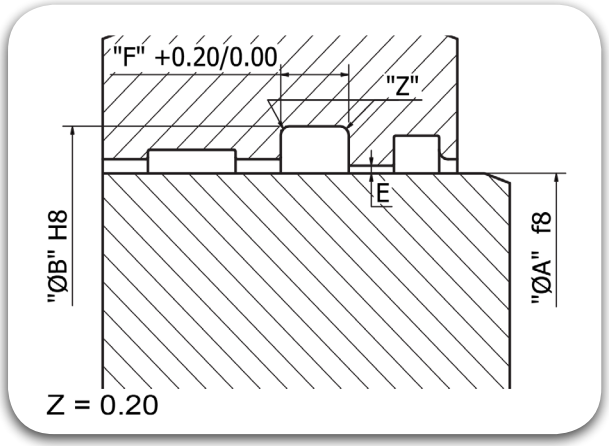

77.00

Part No	RAB 0770 0870 080					
Groove Dimension	ØA	x	ØB	x	F	
	77.00		87.00		8.00	

79.00

Part No	RAB 0790 0885 070					
Groove Dimension	ØA	x	ØB	x	F	
	79.00		88.50		7.00	

80.00

Part No	RAB 0800 0900 080					
Groove Dimension	ØA	x	ØB	x	F	
	80.00		90.00		8.00	

80.00

Part No	RAB 0800 0920 096					
Groove Dimension	ØA	x	ØB	x	F	
	80.00		92.00		9.60	

80.00

Part No	RAB 0800 0960 105					
Groove Dimension	ØA	x	ØB	x	F	
	80.00		96.00		10.50	

80.00

Part No	RAB 0800 1000 145					
Groove Dimension	ØA	x	ØB	x	F	
	80.00		100.00		14.50	

81.00

Part No	RAB 0810 0910 080					
Groove Dimension	ØA	x	ØB	x	F	
	81.00		91.00		8.00	

82.55

Part No	RAB 0825 1016 148					
Groove Dimension	ØA	x	ØB	x	F	
	82.55		101.60		14.80	

84.00

Part No	RAB 0840 0940 080					
Groove Dimension	ØA	x	ØB	x	F	
	84.00		94.00		8.00	

85.00

Part No	RAB 0850 0950 080					
Groove Dimension	ØA	x	ØB	x	F	
	85.00		95.00		8.00	

85.00

Part No	RAB 0850 0950 085					
Groove Dimension	ØA	x	ØB	x	F	
	85.00		95.00		8.50	

85.00

Part No	RAB 0850 0970 096					
Groove Dimension	ØA	x	ØB	x	F	
	85.00		97.00		9.60	

85.00

Part No	RAB 0850 1000 120					
Groove Dimension	ØA	x	ØB	x	F	
	85.00		100.00		12.00	

85.00

Part No	RAB 0850 1050 145					
Groove Dimension	ØA	x	ØB	x	F	
	85.00		105.00		14.50	

85.00

Part No	RAB 0850 1100 135					
Groove Dimension	ØA	x	ØB	x	F	
	85.00		110.00		13.50	

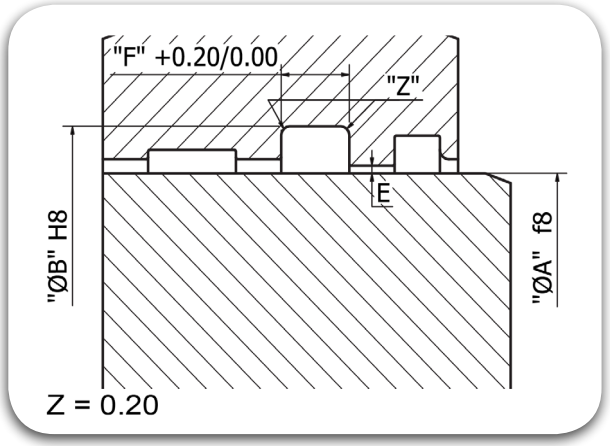

85.72

Part No	RAB 0857 1047 148					
Groove Dimension	ØA	x	ØB	x	F	
	85.72		104.77		14.80	

85.72

Part No	RAB 0857 1111 195					
Groove Dimension	ØA	x	ØB	x	F	
	85.72		111.12		19.50	

88.00

Part No	RAB 0880 0960 080					
Groove Dimension	ØA	x	ØB	x	F	
	88.00		96.00		8.00	

88.90

Part No	RAB 0889 1016 100					
Groove Dimension	ØA	x	ØB	x	F	
	88.90		101.60		10.00	

88.90

Part No	RAB 0889 1079 127					
Groove Dimension	ØA	x	ØB	x	F	
	88.90		107.95		12.70	

88.90

Part No	RAB 0889 1143 127					
Groove Dimension	ØA	x	ØB	x	F	
	88.90		114.30		12.70	

90.00

Part No	RAB 0900 1020 096					
Groove Dimension	ØA	x	ØB	x	F	
	90.00		102.00		9.60	

90.00

Part No	RAB 0900 1100 125					
Groove Dimension	ØA	x	ØB	x	F	
	90.00		110.00		12.50	

91.00

Part No	RAB 0910 0990 085					
Groove Dimension	ØA	x	ØB	x	F	
	91.00		99.00		8.50	

92.07

Part No	RAB 0920 1174 132					
Groove Dimension	ØA	x	ØB	x	F	
	92.07		117.45		13.20	

95.00

Part No	RAB 0950 1050 110					
Groove Dimension	ØA	x	ØB	x	F	
	95.00		105.00		11.00	

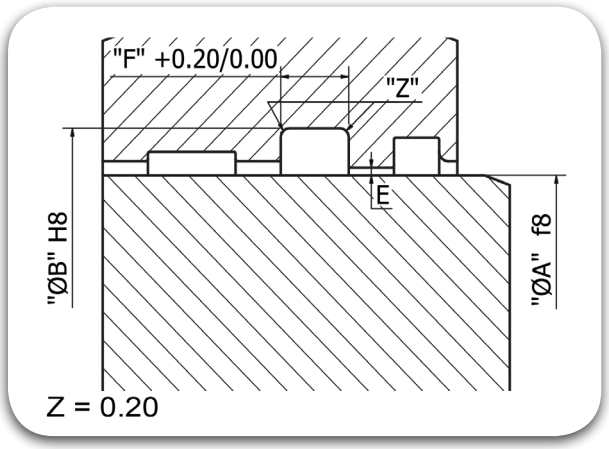

95.00

Part No	RAB 0950 1070 125				
Groove Dimension	ØA	x	ØB	x	F
	95.00		107.00		12.50

95.00

Part No	RAB 0950 1100 125				
Groove Dimension	ØA	x	ØB	x	F
	95.00		110.00		12.50

95.25

Part No	RAB 0952 1143 135				
Groove Dimension	ØA	x	ØB	x	F
	95.25		114.30		13.50

95.25

Part No	RAB 0952 1206 195				
Groove Dimension	ØA	x	ØB	x	F
	95.25		120.65		19.50

96.00

Part No	RAB 0960 1050 085				
Groove Dimension	ØA	x	ØB	x	F
	96.00		105.00		8.50

96.00

Part No	RAB 0960 1080 125				
Groove Dimension	ØA	x	ØB	x	F
	96.00		108.00		12.50

97.00

Part No	RAB 0970 1080 125				
Groove Dimension	ØA	x	ØB	x	F
	97.00		108.00		12.50

98.00

Part No	RAB 0980 1075 070				
Groove Dimension	ØA	x	ØB	x	F
	98.00		107.50		7.00

100.00

Part No	RAB 1000 1130 135				
Groove Dimension	ØA	x	ØB	x	F
	100.00		113.00		13.50

100.00

Part No	RAB 1000 1150 115				
Groove Dimension	ØA	x	ØB	x	F
	100.00		115.00		11.50

100.00

Part No	RAB 1000 1200 120				
Groove Dimension	ØA	x	ØB	x	F
	100.00		120.00		12.00

100.00

Part No	RAB 1000 1200 145				
Groove Dimension	ØA	x	ØB	x	F
	100.00		120.00		14.50

101.50

Part No	RAB 1015 1238 171				
Groove Dimension	ØA	x	ØB	x	F
	101.50		123.82		17.18

101.60

Part No	RAB 1016 1270 195					
Groove Dimension	ØA	x	ØB	x	F	
	101.60		127.00		19.50	

103.00

Part No	RAB 1030 1150 125					
Groove Dimension	ØA	x	ØB	x	F	
	103.00		115.00		12.50	

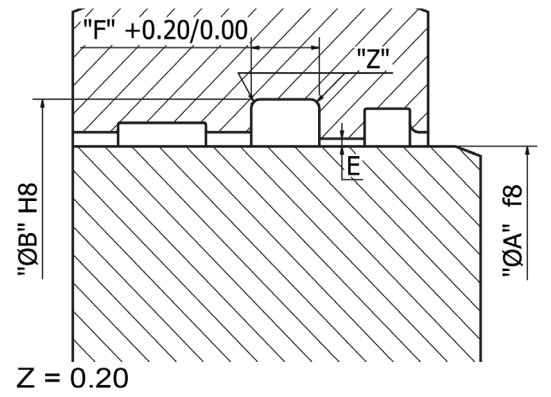

104.00

Part No	RAB 1040 1200 120					
Groove Dimension	ØA	x	ØB	x	F	
	104.00		120.00		12.00	

104.00

Part No	RAB 1040 1300 195					
Groove Dimension	ØA	x	ØB	x	F	
	104.00		130.00		19.50	

105.00

Part No	RAB 1050 1150 110					
Groove Dimension	ØA	x	ØB	x	F	
	105.00		115.00		11.00	

105.00

Part No	RAB 1050 1170 125					
Groove Dimension	ØA	x	ØB	x	F	
	105.00		117.00		12.50	

105.00

Part No	RAB 1050 1200 120					
Groove Dimension	ØA	x	ØB	x	F	
	105.00		120.00		12.00	

105.00

Part No	RAB 1050 1250 125					
Groove Dimension	ØA	x	ØB	x	F	
	105.00		125.00		12.50	

106.00

Part No	RAB 1060 1160 085					
Groove Dimension	ØA	x	ØB	x	F	
	106.00		116.00		8.50	

107.00

Part No	RAB 1070 1150 080					
Groove Dimension	ØA	x	ØB	x	F	
	107.00		115.00		8.00	

107.95

Part No	RAB 1079 1333 190					
Groove Dimension	ØA	x	ØB	x	F	
	107.95		133.35		19.00	

110.00

Part No	RAB 1100 1250 120					
Groove Dimension	ØA	x	ØB	x	F	
	110.00		125.00		12.00	

110.00

Part No	RAB 1100 1350 155					
Groove Dimension	ØA	x	ØB	x	F	
	110.00		135.00		15.50	

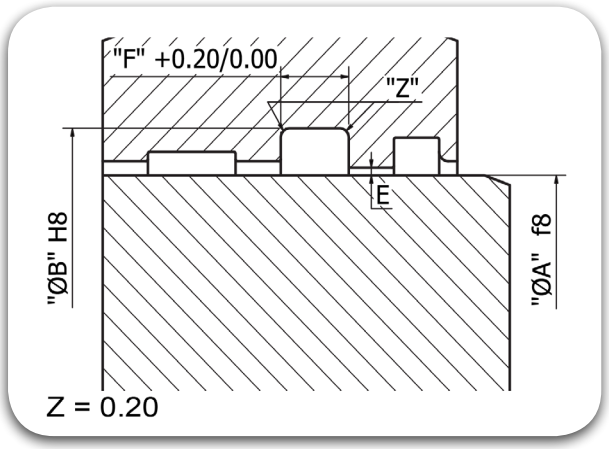

110.00

Part No	RAB 1100 1400 165					
Groove Dimension	ØA	x	ØB	x	F	
	110.00		140.00		16.50	

114.30

Part No	RAB 1143 1333 124					
Groove Dimension	ØA	x	ØB	x	F	
	114.30		133.35		12.40	

114.30

Part No	RAB 1143 1397 195					
Groove Dimension	ØA	x	ØB	x	F	
	114.30		139.70		19.50	

115.00

Part No	RAB 1150 1250 090					
Groove Dimension	ØA	x	ØB	x	F	
	115.00		125.00		9.00	

115.00

Part No	RAB 1150 1350 160					
Groove Dimension	ØA	x	ØB	x	F	
	115.00		135.00		16.00	

118.00

Part No	RAB 1180 1300 125					
Groove Dimension	ØA	x	ØB	x	F	
	118.00		130.00		12.50	

120.00

Part No	RAB 1200 1300 080					
Groove Dimension	ØA	x	ØB	x	F	
	120.00		130.00		8.00	

120.00

Part No	RAB 1200 1327 100					
Groove Dimension	ØA	x	ØB	x	F	
	120.00		132.70		10.00	

120.00

Part No	RAB 1200 1400 125					
Groove Dimension	ØA	x	ØB	x	F	
	120.00		140.00		12.50	

120.65

Part No	RAB 1206 1460 195					
Groove Dimension	ØA	x	ØB	x	F	
	120.65		146.05		19.50	

123.00

Part No	RAB 1230 1330 080					
Groove Dimension	ØA	x	ØB	x	F	
	123.00		133.00		8.00	

125.00

Part No	RAB 1250 1350 085					
Groove Dimension	ØA	x	ØB	x	F	
	125.00		135.00		8.50	

125.00

Part No	RAB 1250 1400 120					
Groove Dimension	ØA	x	ØB	x	F	
	125.00		140.00		12.00	

126.00

Part No	RAB 1260 1340 080		
Groove Dimension	ØA	ØB	F
	126.00	134.00	8.00

126.00

Part No	RAB 1260 1360 085		
Groove Dimension	ØA	ØB	F
	126.00	136.00	8.50

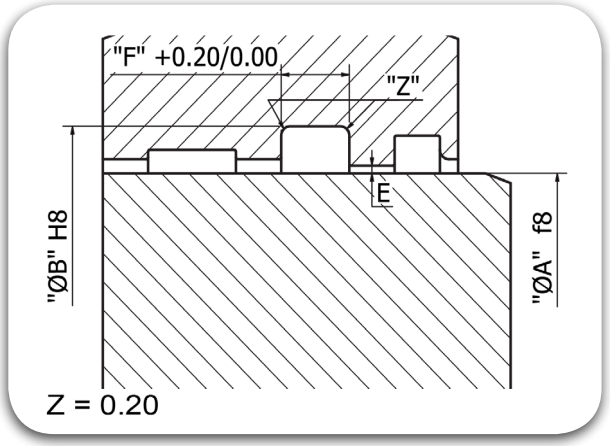

127.00

Part No	RAB 1270 1397 100		
Groove Dimension	ØA	ØB	F
	127.00	139.70	10.00

127.00

Part No	RAB 1270 1450 115		
Groove Dimension	ØA	ØB	F
	127.00	145.00	11.50

127.00

Part No	RAB 1270 1524 195		
Groove Dimension	ØA	ØB	F
	127.00	152.40	19.50

130.00

Part No	RAB 1300 1400 080		
Groove Dimension	ØA	ØB	F
	130.00	140.00	8.00

130.00

Part No	RAB 1300 1450 130		
Groove Dimension	ØA	ØB	F
	130.00	145.00	13.00

131.00

Part No	RAB 1310 1440 135		
Groove Dimension	ØA	ØB	F
	131.00	144.00	13.50

133.35

Part No	RAB 1333 1587 140		
Groove Dimension	ØA	ØB	F
	133.35	158.75	14.00

139.70

Part No	RAB 1397 1651 195		
Groove Dimension	ØA	ØB	F
	139.70	165.10	19.50

140.00

Part No	RAB 1400 1550 130		
Groove Dimension	ØA	ØB	F
	140.00	155.00	13.00

146.05

Part No	RAB 1460 1714 195		
Groove Dimension	ØA	ØB	F
	146.05	171.45	19.50

152.40

Part No	RAB 1524 1778 195		
Groove Dimension	ØA	ØB	F
	152.40	177.80	19.50

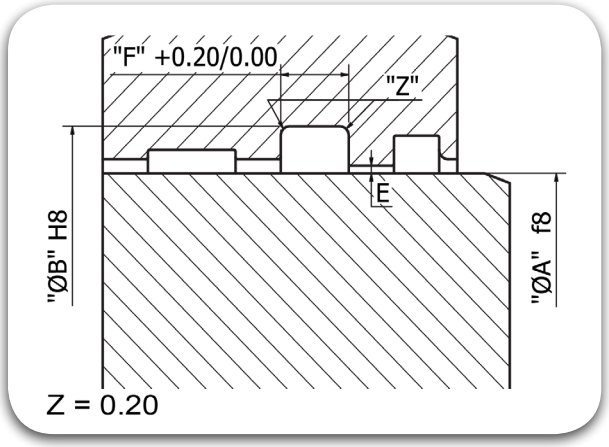

152.40

Part No	RAB 1524 1841 258					
Groove Dimension	ØA	x	ØB	x	F	
	152.40		184.10		25.80	

155.00

Part No	RAB 1550 1700 095					
Groove Dimension	ØA	x	ØB	x	F	
	155.00		170.00		9.50	

158.75

Part No	RAB 1587 1905 258					
Groove Dimension	ØA	x	ØB	x	F	
	158.75		190.50		25.80	

160.00

Part No	RAB 1600 1740 115					
Groove Dimension	ØA	x	ØB	x	F	
	160.00		174.00		11.50	

163.00

Part No	RAB 1630 1780 130					
Groove Dimension	ØA	x	ØB	x	F	
	163.00		178.00		13.00	

165.10

Part No	RAB 1651 1778 100					
Groove Dimension	ØA	x	ØB	x	F	
	165.10		177.80		10.00	

165.10

Part No	RAB 1651 1968 258					
Groove Dimension	ØA	x	ØB	x	F	
	165.10		196.85		25.80	

170.00

Part No	RAB 1700 1827 100					
Groove Dimension	ØA	x	ØB	x	F	
	170.00		182.70		10.00	

171.45

Part No	RAB 1714 2032 258					
Groove Dimension	ØA	x	ØB	x	F	
	171.45		203.20		25.80	

175.00

Part No	RAB 1750 2000 145					
Groove Dimension	ØA	x	ØB	x	F	
	175.00		200.00		14.50	

177.80

Part No	RAB 1778 2032 227					
Groove Dimension	ØA	x	ØB	x	F	
	177.80		203.20		22.70	

180.00

Part No	RAB 1800 1950 125					
Groove Dimension	ØA	x	ØB	x	F	
	180.00		195.00		12.50	

184.15

Part No	RAB 1841 2159 258					
Groove Dimension	ØA	x	ØB	x	F	
	184.15		215.90		25.80	

187.00

Part No	RAB 1870 2020 115					
Groove Dimension	ØA	x	ØB	x	F	
	187.00		202.00		11.50	

188.00

Part No	RAB 1880 2030 130					
Groove Dimension	ØA	x	ØB	x	F	
	188.00		203.00		13.00	

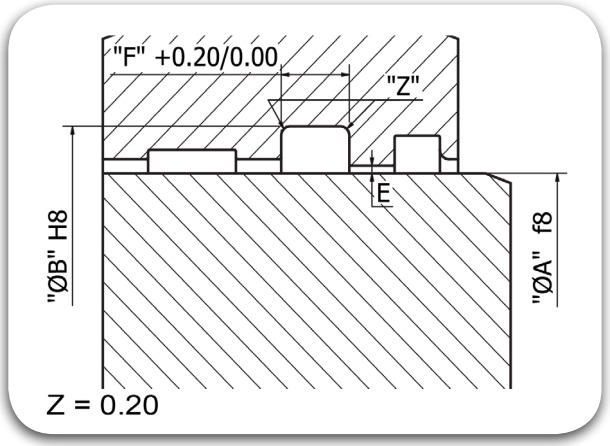

190.50

Part No	RAB 1905 2222 258					
Groove Dimension	ØA	x	ØB	x	F	
	190.50		222.25		25.80	

196.00

Part No	RAB 1960 2087 095					
Groove Dimension	ØA	x	ØB	x	F	
	196.00		208.70		9.50	

196.85

Part No	RAB 1968 2286 258					
Groove Dimension	ØA	x	ØB	x	F	
	196.85		228.60		25.80	

203.20

Part No	RAB 2032 2350 258					
Groove Dimension	ØA	x	ØB	x	F	
	203.20		235.00		25.80	

214.00

Part No	RAB 2140 2290 130					
Groove Dimension	ØA	x	ØB	x	F	
	214.00		229.00		13.00	

215.90

Part No	RAB 2159 2476 258					
Groove Dimension	ØA	x	ØB	x	F	
	215.90		247.65		25.80	

220.00

Part No	RAB 2200 2500 205					
Groove Dimension	ØA	x	ØB	x	F	
	220.00		250.00		20.50	

222.25

Part No	RAB 2222 2540 258					
Groove Dimension	ØA	x	ØB	x	F	
	222.25		254.00		25.80	

224.00

Part No	RAB 2240 2367 095					
Groove Dimension	ØA	x	ØB	x	F	
	224.00		236.70		9.50	

228.60

Part No	RAB 2286 2603 258					
Groove Dimension	ØA	x	ØB	x	F	
	228.60		260.35		25.80	

238.00

Part No	RAB 2380 2580 155					
Groove Dimension	ØA	x	ØB	x	F	
	238.00		258.00		15.50	

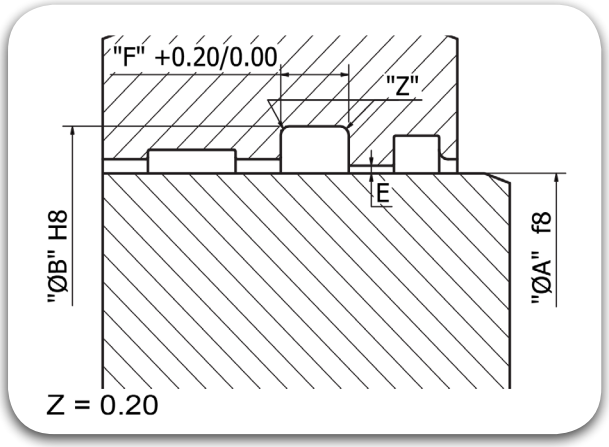

240.00

Part No	RAB 2400 2550 130					
Groove Dimension	ØA	x	ØB	x	F	
	240.00		255.00		13.00	

241.30

Part No	RAB 2413 2730 258					
Groove Dimension	ØA	x	ØB	x	F	
	241.30		273.05		25.80	

250.00

Part No	RAB 2500 2900 254					
Groove Dimension	ØA	x	ØB	x	F	
	250.00		290.00		25.40	

254.00

Part No	RAB 2540 2857 258					
Groove Dimension	ØA	x	ØB	x	F	
	254.00		285.75		25.80	

260.35

Part No	RAB 2603 2921 258					
Groove Dimension	ØA	x	ØB	x	F	
	260.35		292.10		25.80	

266.70

Part No	RAB 2667 2984 258					
Groove Dimension	ØA	x	ØB	x	F	
	266.70		298.45		25.80	

273.05

Part No	RAB 2730 3048 258					
Groove Dimension	ØA	x	ØB	x	F	
	273.05		304.80		25.80	

279.40

Part No	RAB 2794 3111 258					
Groove Dimension	ØA	x	ØB	x	F	
	279.40		311.15		25.80	

280.00

Part No	RAB 2800 3200 225					
Groove Dimension	ØA	x	ØB	x	F	
	280.00		320.00		22.50	

285.75

Part No	RAB 2857 3175 258					
Groove Dimension	ØA	x	ØB	x	F	
	285.75		317.50		25.80	

298.45

Part No	RAB 2984 3302 258					
Groove Dimension	ØA	x	ØB	x	F	
	298.45		330.20		25.80	

304.80

Part No	RAB 3048 3365 258					
Groove Dimension	ØA	x	ØB	x	F	
	304.80		336.55		25.80	

318.00

Part No	RAB 3180 3550 130					
Groove Dimension	ØA	x	ØB	x	F	
	318.00		355.00		13.00	

320.00

Part No	RAB 3200 3600 255		
Groove Dimension	ØA	ØB	F
	320.00	360.00	25.50

350.00

Part No	RAB 3500 3850 254		
Groove Dimension	ØA	ØB	F
	350.00	385.00	25.40

375.00

Part No	RAB 3750 4150 254		
Groove Dimension	ØA	ØB	F
	375.00	415.00	25.40

445.00

Part No	RAB 4450 4820 355		
Groove Dimension	ØA	ØB	F
	445.00	482.00	35.50

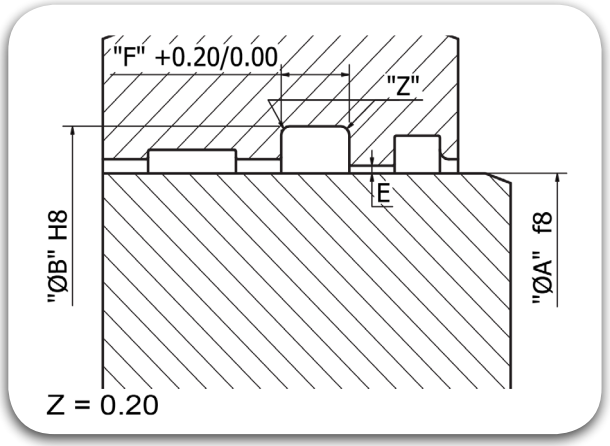

Rod Seals

RPS

TRIADA
TECHNOLOGIES

#SealingExcellence




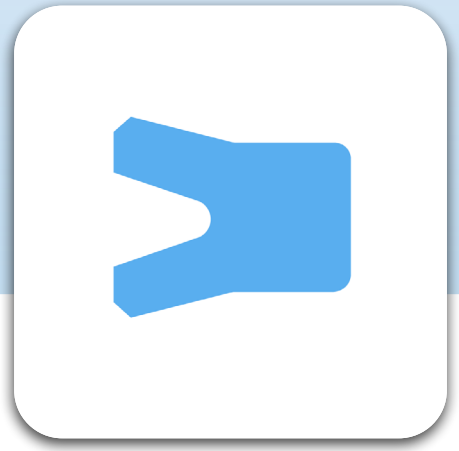

Description

The RPS is a single acting Symmetrical U-Cup, the TRIATHANE® (polyurethane) material used in this U-Cup provides high wear resistance, the taper behind the lip reduces friction at the dynamic surface.

Diameter Range	Ø3.00 – Ø3500.00
Standard material	TRIATHANE® T479 (Polyurethane)
Temperature(°C)	-35° C to 110° C
Speed	≤ 0.50 m/s
Fluids	Hydraulic fluids (Mineral Oil based), Water, Air etc, depending on Seal Compounds selected. depending on Seal Compounds selected.
Pressure	≤ 400 bar

Reciprocating | Oscillating | Rotary | Helix | Static | Single Acting | Double Acting

Material Details

Seal Material	Seal Material Code
TRIATHANE® Polyurethane	T479
TRIAFLEX® NBR 90 Shore A	T591

Nomenclature

Part No	RPS	0130	0200	070	T479
	Seal profile	Rod Dia x 10	Groove Dia x 10	Groove Width x 10	Seal Material Code

Groove Details

Operating Pressure (Bar)	Radial Clearance "E" max	
	ØA < 60mm	ØA > 60mm
50	0.40	0.50
100	0.30	0.40
200	0.20	0.30
300	0.15	0.20
400	0.10	0.15

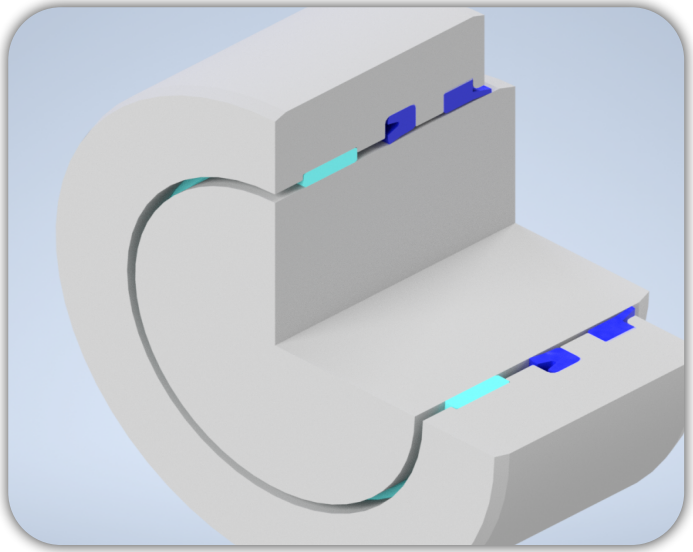

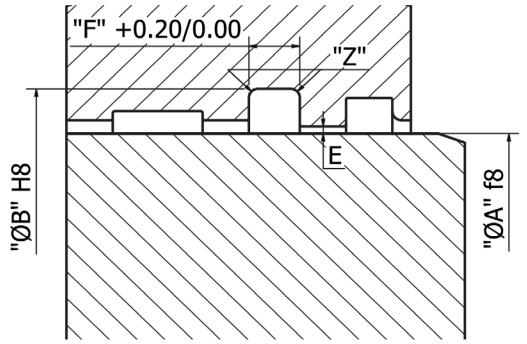

3.00		ØA		ØB		F
Part No	RPS 0030 0090 050					
Groove Dimension		3.00	x	9.00	x	5.00

4.00		ØA		ØB		F
Part No	PSS 0040 0090 045					
Groove Dimension		4.00	x	9.00	x	4.50

4.00		ØA		ØB		F
Part No	RPS 0040 0100 045					
Groove Dimension		4.00	x	10.00	x	4.50

4.00		ØA		ØB		F
Part No	RPS 0040 0100 050					
Groove Dimension		4.00	x	10.00	x	5.00

4.00		ØA		ØB		F
Part No	RPS 0040 0120 045					
Groove Dimension		4.00	x	12.00	x	4.50

4.50		ØA		ØB		F
Part No	RPS 0450 0110 055					
Groove Dimension		4.50	x	11.00	x	5.50

4.50		ØA		ØB		F
Part No	RPS 0450 0125 050					
Groove Dimension		4.50	x	12.50	x	5.00

5.00		ØA		ØB		F
Part No	RPS 0050 0120 070					
Groove Dimension		5.00	x	12.00	x	7.00

5.00		ØA		ØB		F
Part No	RPS 0050 0120 055					
Groove Dimension		5.00	x	12.00	x	5.50

5.00		ØA		ØB		F
Part No	RPS 0050 0120 065					
Groove Dimension		5.00	x	12.00	x	6.50

5.00		ØA		ØB		F
Part No	RPS 0050 0120 050					
Groove Dimension		5.00	x	12.00	x	5.00

5.00		ØA		ØB		F
Part No	RPS 0050 0127 090					
Groove Dimension		5.00	x	12.70	x	9.00

5.00		ØA		ØB		F
Part No	RPS 0050 0130 045					
Groove Dimension		5.00	x	13.00	x	4.50

6.00

Part No	RPS 0060 0120 045		
Groove Dimension	ØA	ØB	F
	6.00	12.00	4.50

6.00

Part No	RPS 0060 0120 090		
Groove Dimension	ØA	ØB	F
	6.00	12.00	9.00

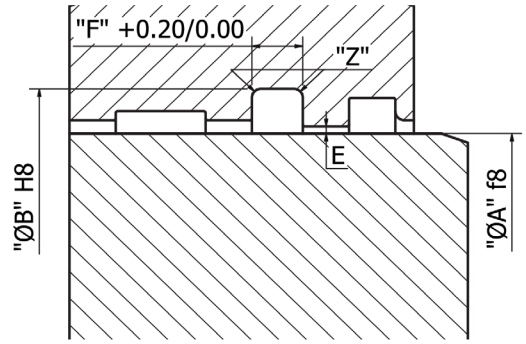

6.00

Part No	RPS 0060 0120 060		
Groove Dimension	ØA	ØB	F
	6.00	12.00	6.00

6.00

Part No	RPS 0060 0120 065		
Groove Dimension	ØA	ØB	F
	6.00	12.00	6.50

6.00

Part No	RPS 0060 0127 065		
Groove Dimension	ØA	ØB	F
	6.00	12.70	6.50

6.00

Part No	RPS 0060 0150 090		
Groove Dimension	ØA	ØB	F
	6.00	15.00	9.00

6.00

Part No	RPS 0060 0160 055		
Groove Dimension	ØA	ØB	F
	6.00	16.00	5.50

6.30

Part No	RPS 0063 0127 045		
Groove Dimension	ØA	ØB	F
	6.30	12.70	4.50

7.00

Part No	RPS 0070 0140 042		
Groove Dimension	ØA	ØB	F
	7.00	14.00	4.20

7.00

Part No	RPS 0070 0150 045		
Groove Dimension	ØA	ØB	F
	7.00	15.00	4.50

7.00

Part No	RPS 0070 0150 080		
Groove Dimension	ØA	ØB	F
	7.00	15.00	8.00

8.00

Part No	RPS 0080 0120 035		
Groove Dimension	ØA	ØB	F
	8.00	12.00	3.50

8.00

Part No	RPS 0080 0120 060		
Groove Dimension	ØA	ØB	F
	8.00	12.00	6.00

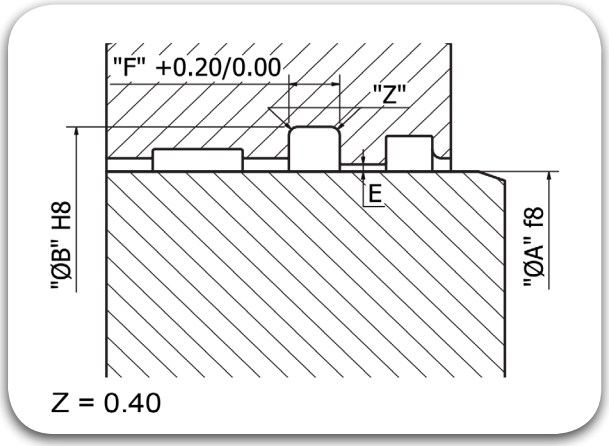

8.00		ØA		ØB		F
Part No	RPS 0080 0140 070					
Groove Dimension		8.00	x	14.00	x	7.00

8.00		ØA		ØB		F
Part No	RPS 0080 0150 063					
Groove Dimension		8.00	x	15.00	x	6.30

8.00		ØA		ØB		F
Part No	RPS 0080 0150 090					
Groove Dimension		8.00	x	15.00	x	9.00

8.00		ØA		ØB		F
Part No	RPS 0080 0160 045					
Groove Dimension		8.00	x	16.00	x	4.50

8.00		ØA		ØB		F
Part No	RPS 0080 0160 063					
Groove Dimension		8.00	x	16.00	x	6.30

8.00		ØA		ØB		F
Part No	RPS 0080 0160 080					
Groove Dimension		8.00	x	16.00	x	8.00

8.00		ØA		ØB		F
Part No	RPS 0080 0180 055					
Groove Dimension		8.00	x	18.00	x	5.50

8.00		ØA		ØB		F
Part No	RPS 0080 0180 080					
Groove Dimension		8.00	x	18.00	x	8.00

8.00		ØA		ØB		F
Part No	RPS 0080 0200 070					
Groove Dimension		8.00	x	20.00	x	7.00

8.00		ØA		ØB		F
Part No	RPS 0080 0220 090					
Groove Dimension		8.00	x	22.00	x	9.00

9.00		ØA		ØB		F
Part No	RPS 0090 0135 050					
Groove Dimension		9.00	x	13.50	x	5.00

9.00		ØA		ØB		F
Part No	RPS 0090 0150 090					
Groove Dimension		9.00	x	15.00	x	9.00

9.00		ØA		ØB		F
Part No	RPS 0090 0190 070					
Groove Dimension		9.00	x	19.00	x	7.00

9.00

Part No	RPS 0090 0220 090					
Groove Dimension	ØA	x	ØB	x	F	
	9.00		22.00		9.00	

10.00

Part No	RPS 0100 0160 065					
Groove Dimension	ØA	x	ØB	x	F	
	10.00		16.00		6.50	

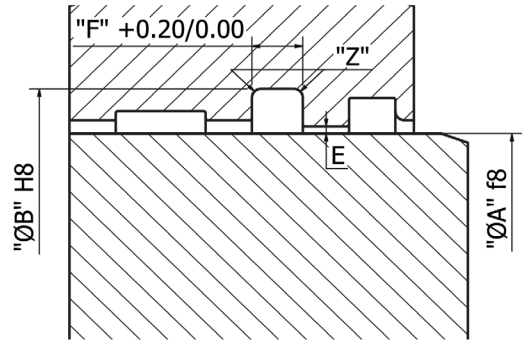

10.00

Part No	RPS 0100 0160 045					
Groove Dimension	ØA	x	ØB	x	F	
	10.00		16.00		4.50	

10.00

Part No	RPS 0100 0180 070					
Groove Dimension	ØA	x	ØB	x	F	
	10.00		18.00		7.00	

10.00

Part No	RPS 0100 0180 045					
Groove Dimension	ØA	x	ØB	x	F	
	10.00		18.00		4.50	

10.00

Part No	RPS 0100 0180 090					
Groove Dimension	ØA	x	ØB	x	F	
	10.00		18.00		9.00	

10.00

Part No	RPS 0100 0200 055					
Groove Dimension	ØA	x	ØB	x	F	
	10.00		20.00		5.50	

10.00

Part No	RPS 0100 0200 080					
Groove Dimension	ØA	x	ØB	x	F	
	10.00		20.00		8.00	

10.00

Part No	RPS 0100 0220 070					
Groove Dimension	ØA	x	ØB	x	F	
	10.00		22.00		7.00	

10.00

Part No	RPS 0100 0250 080					
Groove Dimension	ØA	x	ØB	x	F	
	10.00		25.00		8.00	

11.00

Part No	RPS 0110 0170 050					
Groove Dimension	ØA	x	ØB	x	F	
	11.00		17.00		5.00	

11.00

Part No	RPS 0110 0205 070					
Groove Dimension	ØA	x	ØB	x	F	
	11.00		20.50		7.00	

12.00

Part No	RPS 0120 0180 055					
Groove Dimension	ØA	x	ØB	x	F	
	12.00		18.00		5.50	

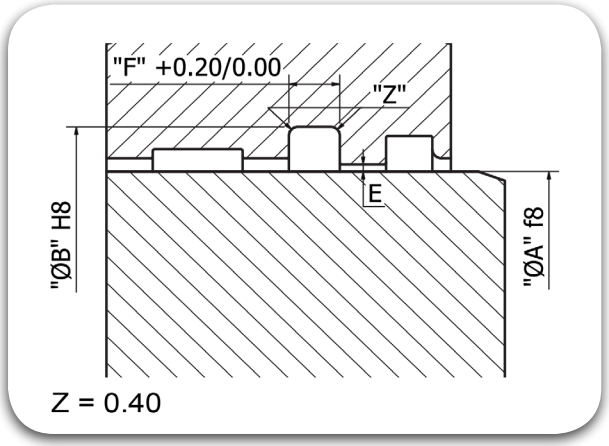

12.00

Part No	RPS 0120 0180 070					
Groove Dimension	ØA	x	ØB	x	F	
	12.00		18.00		7.00	

12.00

Part No	RPS 0120 0190 060					
Groove Dimension	ØA	x	ØB	x	F	
	12.00		19.00		6.00	

12.00

Part No	RPS 0120 0200 090					
Groove Dimension	ØA	x	ØB	x	F	
	12.00		20.00		9.00	

12.00

Part No	RPS 0120 0200 045					
Groove Dimension	ØA	x	ØB	x	F	
	12.00		20.00		4.50	

12.00

Part No	RPS 0120 0200 080					
Groove Dimension	ØA	x	ØB	x	F	
	12.00		20.00		8.00	

12.00

Part No	RPS 0120 0240 065					
Groove Dimension	ØA	x	ØB	x	F	
	12.00		24.00		6.50	

12.00

Part No	RPS 0120 0240 100					
Groove Dimension	ØA	x	ØB	x	F	
	12.00		24.00		10.00	

12.00

Part No	RPS 0120 0250 110					
Groove Dimension	ØA	x	ØB	x	F	
	12.00		25.00		11.00	

12.00

Part No	RPS 0120 0250 090					
Groove Dimension	ØA	x	ØB	x	F	
	12.00		25.00		9.00	

13.00

Part No	RPS 0130 0200 070					
Groove Dimension	ØA	x	ØB	x	F	
	13.00		20.00		7.00	

13.00

Part No	RPS 0130 0210 065					
Groove Dimension	ØA	x	ØB	x	F	
	13.00		21.00		6.50	

13.00

Part No	RPS 0130 0250 065					
Groove Dimension	ØA	x	ØB	x	F	
	13.00		25.00		6.50	

13.00

Part No	RPS 0130 0250 100					
Groove Dimension	ØA	x	ØB	x	F	
	13.00		25.00		10.00	

14.00

Part No	RPS 0140 0200 053					
Groove Dimension	ØA	x	ØB	x	F	
	14.00		20.00		5.30	

14.00

Part No	RPS 0140 0220 045					
Groove Dimension	ØA	x	ØB	x	F	
	14.00		22.00		4.50	

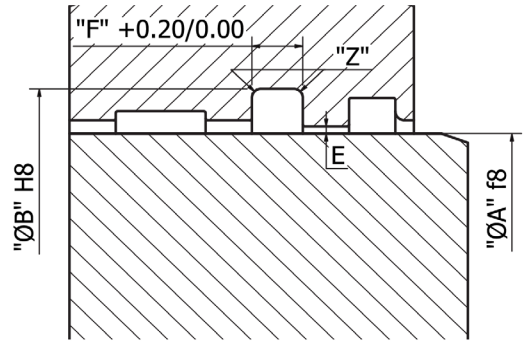

14.00

Part No	RPS 0140 0220 070					
Groove Dimension	ØA	x	ØB	x	F	
	14.00		22.00		7.00	

14.00

Part No	RPS 0140 0220 090					
Groove Dimension	ØA	x	ØB	x	F	
	14.00		22.00		9.00	

14.00

Part No	RPS 0140 0220 120					
Groove Dimension	ØA	x	ØB	x	F	
	14.00		22.00		12.00	

14.00

Part No	RPS 0140 0240 055					
Groove Dimension	ØA	x	ØB	x	F	
	14.00		24.00		5.50	

14.30

Part No	RPS 0143 0206 055					
Groove Dimension	ØA	x	ØB	x	F	
	14.30		20.60		5.50	

14.70

Part No	RPS 0147 0210 070					
Groove Dimension	ØA	x	ØB	x	F	
	14.70		21.00		7.00	

15.00

Part No	RPS 0150 0230 063					
Groove Dimension	ØA	x	ØB	x	F	
	15.00		23.00		6.30	

15.00

Part No	RPS 0150 0250 055					
Groove Dimension	ØA	x	ØB	x	F	
	15.00		25.00		5.50	

15.00

Part No	RPS 0150 0270 070					
Groove Dimension	ØA	x	ØB	x	F	
	15.00		27.00		7.00	

15.00

Part No	RPS 0150 0270 100					
Groove Dimension	ØA	x	ØB	x	F	
	15.00		27.00		10.00	

15.00

Part No	RPS 0150 0300 080					
Groove Dimension	ØA	x	ØB	x	F	
	15.00		30.00		8.00	

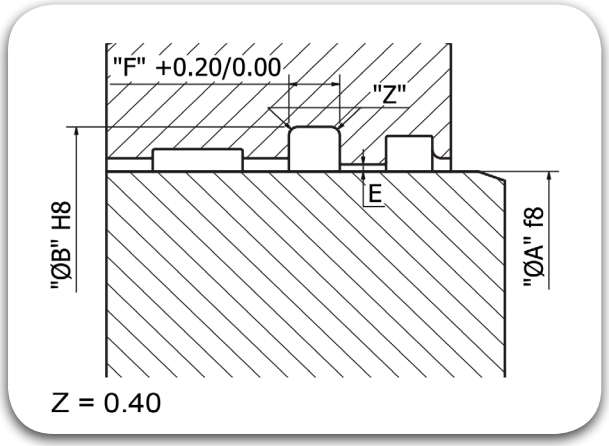

15.00

Part No	RPS 0150 0350 110					
Groove Dimension	ØA	x	ØB	x	F	
	15.00		35.00		11.00	

15.90

Part No	RPS 0159 0254 070					
Groove Dimension	ØA	x	ØB	x	F	
	15.90		25.40		7.00	

16.00

Part No	RPS 0160 0220 045					
Groove Dimension	ØA	x	ØB	x	F	
	16.00		22.00		4.50	

16.00

Part No	RPS 0160 0220 055					
Groove Dimension	ØA	x	ØB	x	F	
	16.00		22.00		5.50	

16.00

Part No	RPS 0160 0240 100					
Groove Dimension	ØA	x	ØB	x	F	
	16.00		24.00		10.00	

16.00

Part No	RPS 0160 0240 045					
Groove Dimension	ØA	x	ØB	x	F	
	16.00		24.00		4.50	

16.00

Part No	RPS 0160 0240 060					
Groove Dimension	ØA	x	ØB	x	F	
	16.00		24.00		6.00	

16.00

Part No	RPS 0160 0240 090					
Groove Dimension	ØA	x	ØB	x	F	
	16.00		24.00		9.00	

16.00

Part No	RPS 0160 0250 090					
Groove Dimension	ØA	x	ØB	x	F	
	16.00		25.00		9.00	

16.00

Part No	RPS 0160 0260 110					
Groove Dimension	ØA	x	ØB	x	F	
	16.00		26.00		11.00	

16.00

Part No	RPS 0160 0320 090					
Groove Dimension	ØA	x	ØB	x	F	
	16.00		32.00		9.00	

17.00

Part No	RPS 0170 0250 045					
Groove Dimension	ØA	x	ØB	x	F	
	17.00		25.00		4.50	

17.00

Part No	RPS 0170 0250 065					
Groove Dimension	ØA	x	ØB	x	F	
	17.00		25.00		6.50	

17.00

Part No	RPS 0170 0250 110
Groove Dimension	ØA 17.00 x ØB 25.00 x F 11.00

17.00

Part No	RPS 0170 0270 075
Groove Dimension	ØA 17.00 x ØB 27.00 x F 7.50

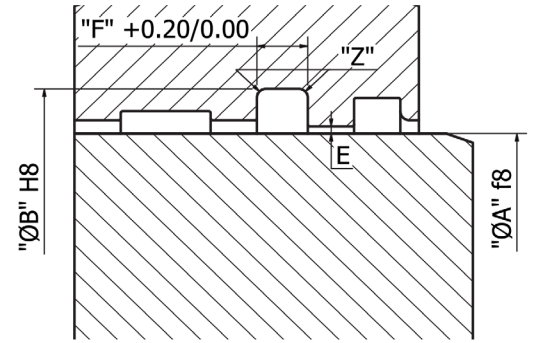

18.00

Part No	RPS 0180 0250 055
Groove Dimension	ØA 18.00 x ØB 25.00 x F 5.50

18.00

Part No	RPS 0180 0250 070
Groove Dimension	ØA 18.00 x ØB 25.00 x F 7.00

18.00

Part No	RPS 0180 0260 075
Groove Dimension	ØA 18.00 x ØB 26.00 x F 7.50

18.00

Part No	RPS 0180 0260 045
Groove Dimension	ØA 18.00 x ØB 26.00 x F 4.50

18.00

Part No	RPS 0180 0260 090
Groove Dimension	ØA 18.00 x ØB 26.00 x F 9.00

18.00

Part No	RPS 0180 0280 055
Groove Dimension	ØA 18.00 x ØB 28.00 x F 5.50

18.00

Part No	RPS 0180 0280 063
Groove Dimension	ØA 18.00 x ØB 28.00 x F 6.30

18.00

Part No	RPS 0180 0300 065
Groove Dimension	ØA 18.00 x ØB 30.00 x F 6.50

18.00

Part No	RPS 0180 0300 090
Groove Dimension	ØA 18.00 x ØB 30.00 x F 9.00

18.00

Part No	RPS 0180 0380 110
Groove Dimension	ØA 18.00 x ØB 38.00 x F 11.00

19.00

Part No	RPS 0190 0250 070
Groove Dimension	ØA 19.00 x ØB 25.00 x F 7.00

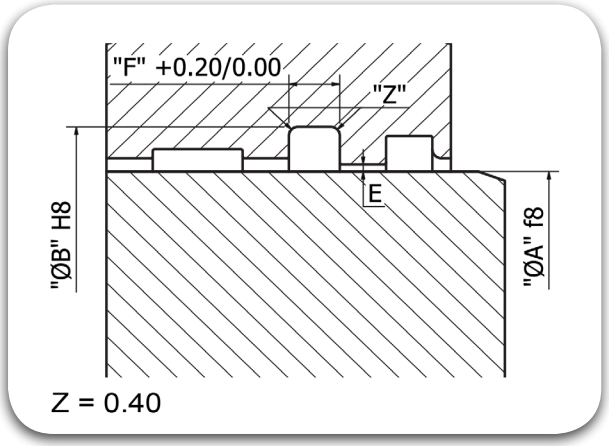

19.00

Part No	RPS 0190 0250 035				
Groove Dimension	ØA	x	ØB	x	F
	19.00		25.00		3.50

20.00

Part No	RPS 0200 0260 060				
Groove Dimension	ØA	x	ØB	x	F
	20.00		26.00		6.00

20.00

Part No	RPS 0200 0260 038				
Groove Dimension	ØA	x	ØB	x	F
	20.00		26.00		3.80

20.00

Part No	RPS 0200 0280 050				
Groove Dimension	ØA	x	ØB	x	F
	20.00		28.00		5.00

20.00

Part No	RPS 0200 0280 055				
Groove Dimension	ØA	x	ØB	x	F
	20.00		28.00		5.50

20.00

Part No	RPS 0200 0280 090				
Groove Dimension	ØA	x	ØB	x	F
	20.00		28.00		9.00

20.00

Part No	RPS 0200 0280 080				
Groove Dimension	ØA	x	ØB	x	F
	20.00		28.00		8.00

20.00

Part No	RPS 0200 0300 055				
Groove Dimension	ØA	x	ØB	x	F
	20.00		30.00		5.50

20.00

Part No	RPS 0200 0300 090				
Groove Dimension	ØA	x	ØB	x	F
	20.00		30.00		9.00

20.00

Part No	RPS 0200 0300 080				
Groove Dimension	ØA	x	ØB	x	F
	20.00		30.00		8.00

20.00

Part No	RPS 0200 0320 100				
Groove Dimension	ØA	x	ØB	x	F
	20.00		32.00		10.00

20.00

Part No	RPS 0200 0320 065				
Groove Dimension	ØA	x	ØB	x	F
	20.00		32.00		6.50

20.00

Part No	RPS 0200 0350 130				
Groove Dimension	ØA	x	ØB	x	F
	20.00		35.00		13.00

20.00

Part No	RPS 0200 0350 100					
Groove Dimension	ØA	x	ØB	x	F	
	20.00		35.00		10.00	

20.00

Part No	RPS 0200 0390 110					
Groove Dimension	ØA	x	ØB	x	F	
	20.00		39.00		11.00	

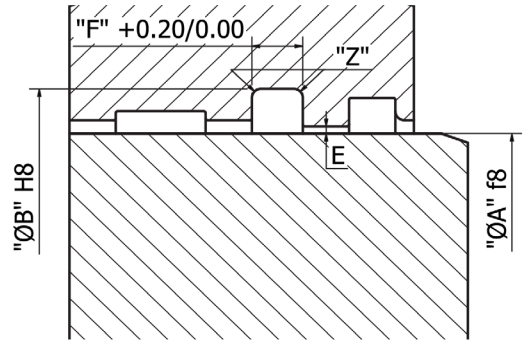

20.00

Part No	RPS 0200 0400 120					
Groove Dimension	ØA	x	ØB	x	F	
	20.00		40.00		12.00	

20.00

Part No	RPS 0200 0400 130					
Groove Dimension	ØA	x	ØB	x	F	
	20.00		40.00		13.00	

22.00

Part No	RPS 0220 0280 090					
Groove Dimension	ØA	x	ØB	x	F	
	22.00		28.00		9.00	

22.00

Part No	RPS 0220 0280 050					
Groove Dimension	ØA	x	ØB	x	F	
	22.00		28.00		5.00	

22.00

Part No	RPS 0220 0300 075					
Groove Dimension	ØA	x	ØB	x	F	
	22.00		30.00		7.50	

22.00

Part No	RPS 0220 0300 045					
Groove Dimension	ØA	x	ØB	x	F	
	22.00		30.00		4.50	

22.00

Part No	RPS 0220 0300 070					
Groove Dimension	ØA	x	ØB	x	F	
	22.00		30.00		7.00	

22.00

Part No	RPS 0220 0300 110					
Groove Dimension	ØA	x	ØB	x	F	
	22.00		30.00		11.00	

22.00

Part No	RPS 0220 0320 055					
Groove Dimension	ØA	x	ØB	x	F	
	22.00		32.00		5.50	

22.00

Part No	RPS 0220 0340 065					
Groove Dimension	ØA	x	ØB	x	F	
	22.00		34.00		6.50	

22.00

Part No	RPS 0220 0350 060					
Groove Dimension	ØA	x	ØB	x	F	
	22.00		35.00		6.00	

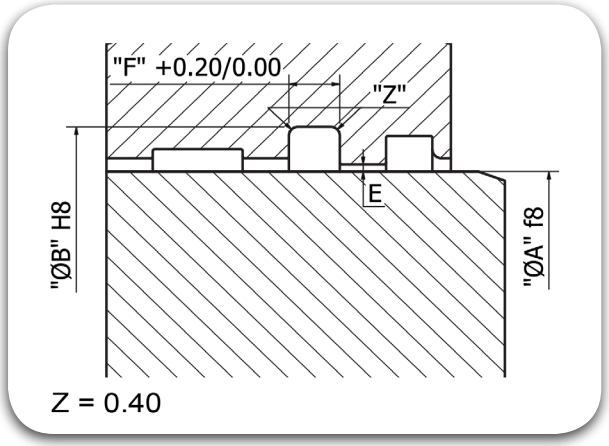

22.00

Part No	RPS 0220 0360 110					
Groove Dimension	ØA	x	ØB	x	F	
	22.00		36.00		11.00	

22.50

Part No	RPS 0225 0300 055					
Groove Dimension	ØA	x	ØB	x	F	
	22.50		30.00		5.50	

23.00

Part No	RPS 0230 0300 075					
Groove Dimension	ØA	x	ØB	x	F	
	23.00		30.00		7.50	

23.00

Part No	RPS 0230 0330 080					
Groove Dimension	ØA	x	ØB	x	F	
	23.00		33.00		8.00	

23.00

Part No	RPS 0230 0350 065					
Groove Dimension	ØA	x	ØB	x	F	
	23.00		35.00		6.50	

24.00

Part No	RPS 0240 0320 075					
Groove Dimension	ØA	x	ØB	x	F	
	24.00		32.00		7.50	

24.00

Part No	RPS 0240 0320 045					
Groove Dimension	ØA	x	ØB	x	F	
	24.00		32.00		4.50	

24.00

Part No	RPS 0240 0320 065					
Groove Dimension	ØA	x	ØB	x	F	
	24.00		32.00		6.50	

24.00

Part No	RPS 0240 0320 080					
Groove Dimension	ØA	x	ØB	x	F	
	24.00		32.00		8.00	

24.00

Part No	RPS 0240 0340 055					
Groove Dimension	ØA	x	ØB	x	F	
	24.00		34.00		5.50	

24.00

Part No	RPS 0240 0360 065					
Groove Dimension	ØA	x	ØB	x	F	
	24.00		36.00		6.50	

24.00

Part No	RPS 0240 0360 100					
Groove Dimension	ØA	x	ØB	x	F	
	24.00		36.00		10.00	

24.00

Part No	RPS 0240 0400 090					
Groove Dimension	ØA	x	ØB	x	F	
	24.00		40.00		9.00	

25.00

Part No	RPS 0250 0330 075		
Groove Dimension	ØA	ØB	F
	25.00	33.00	7.50

25.00

Part No	RPS 0250 0330 045		
Groove Dimension	ØA	ØB	F
	25.00	33.00	4.50

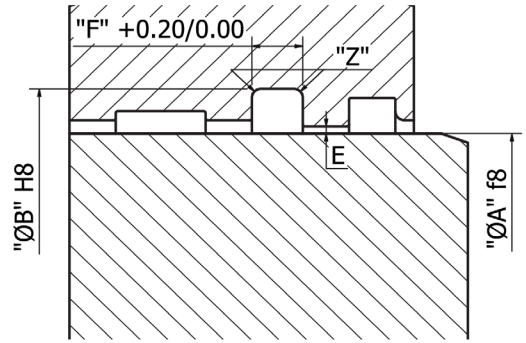

25.00

Part No	RPS 0250 0330 055		
Groove Dimension	ØA	ØB	F
	25.00	33.00	5.50

25.00

Part No	RPS 0250 0350 080		
Groove Dimension	ØA	ØB	F
	25.00	35.00	8.00

25.00

Part No	RPS 0250 0370 065		
Groove Dimension	ØA	ØB	F
	25.00	37.00	6.50

25.00

Part No	RPS 0250 0370 100		
Groove Dimension	ØA	ØB	F
	25.00	37.00	10.00

25.00

Part No	RPS 0250 0381 070		
Groove Dimension	ØA	ØB	F
	25.00	38.10	7.00

25.00

Part No	RPS 0250 0400 080		
Groove Dimension	ØA	ØB	F
	25.00	40.00	8.00

25.00

Part No	RPS 0250 0450 110		
Groove Dimension	ØA	ØB	F
	25.00	45.00	11.00

26.00

Part No	RPS 0260 0340 045		
Groove Dimension	ØA	ØB	F
	26.00	34.00	4.50

26.00

Part No	RPS 0260 0360 080		
Groove Dimension	ØA	ØB	F
	26.00	36.00	8.00

26.00

Part No	RPS 0260 0380 065		
Groove Dimension	ØA	ØB	F
	26.00	38.00	6.50

27.00

Part No	RPS 0270 0350 065		
Groove Dimension	ØA	ØB	F
	27.00	35.00	6.50

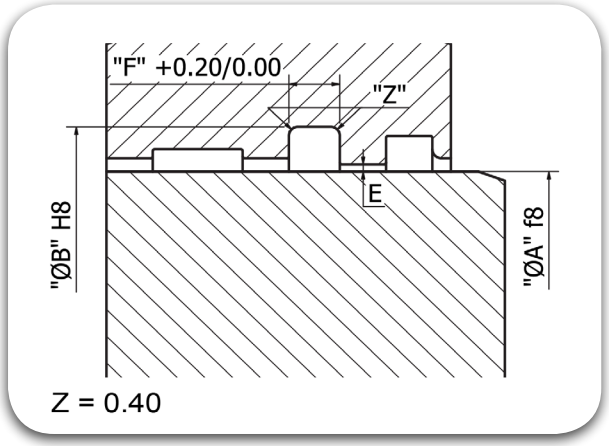

28.00

Part No	RPS 0280 0350 055				
Groove Dimension	ØA	x	ØB	x	F
	28.00		35.00		5.50

28.00

Part No	RPS 0280 0360 075				
Groove Dimension	ØA	x	ØB	x	F
	28.00		36.00		7.50

28.00

Part No	RPS 0280 0400 065				
Groove Dimension	ØA	x	ØB	x	F
	28.00		40.00		6.50

28.60

Part No	RPS 0286 0413 090				
Groove Dimension	ØA	x	ØB	x	F
	28.60		41.30		9.00

29.00

Part No	RPS 0290 0370 045				
Groove Dimension	ØA	x	ØB	x	F
	29.00		37.00		4.50

30.00

Part No	RPS 0300 0360 045				
Groove Dimension	ØA	x	ØB	x	F
	30.00		36.00		4.50

30.00

Part No	RPS 0300 0370 070				
Groove Dimension	ØA	x	ØB	x	F
	30.00		37.00		7.00

30.00

Part No	RPS 0300 0380 080				
Groove Dimension	ØA	x	ØB	x	F
	30.00		38.00		8.00

30.00

Part No	RPS 0300 0380 045				
Groove Dimension	ØA	x	ØB	x	F
	30.00		38.00		4.50

30.00

Part No	RPS 0300 0380 065				
Groove Dimension	ØA	x	ØB	x	F
	30.00		38.00		6.50

30.00

Part No	RPS 0300 0400 110				
Groove Dimension	ØA	x	ØB	x	F
	30.00		40.00		11.00

30.00

Part No	RPS 0300 0400 080				
Groove Dimension	ØA	x	ØB	x	F
	30.00		40.00		8.00

30.00

Part No	RPS 0300 0400 090				
Groove Dimension	ØA	x	ØB	x	F
	30.00		40.00		9.00

30.00

Part No	RPS 0300 0420 065					
Groove Dimension	ØA	x	ØB	x	F	
	30.00		42.00		6.50	

30.00

Part No	RPS 0300 0450 100					
Groove Dimension	ØA	x	ØB	x	F	
	30.00		45.00		10.00	

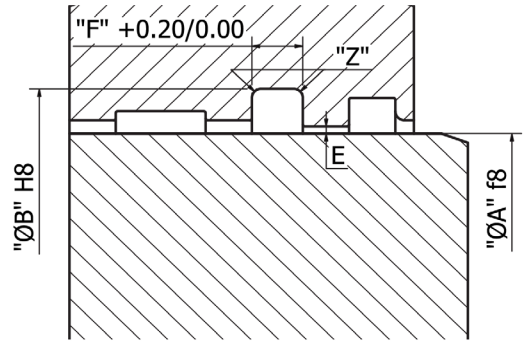

32.00

Part No	RPS 0320 0400 045					
Groove Dimension	ØA	x	ØB	x	F	
	32.00		40.00		4.50	

32.00

Part No	RPS 0320 0420 055					
Groove Dimension	ØA	x	ØB	x	F	
	32.00		42.00		5.50	

32.00

Part No	RPS 0320 0420 080					
Groove Dimension	ØA	x	ØB	x	F	
	32.00		42.00		8.00	

32.00

Part No	RPS 0320 0440 065					
Groove Dimension	ØA	x	ØB	x	F	
	32.00		44.00		6.50	

32.00

Part No	RPS 0320 0440 100					
Groove Dimension	ØA	x	ØB	x	F	
	32.00		44.00		10.00	

32.00

Part No	RPS 0320 0480 110					
Groove Dimension	ØA	x	ØB	x	F	
	32.00		48.00		11.00	

32.00

Part No	RPS 0320 0500 130					
Groove Dimension	ØA	x	ØB	x	F	
	32.00		50.00		13.00	

32.00

Part No	RPS 0320 0520 110					
Groove Dimension	ØA	x	ØB	x	F	
	32.00		52.00		11.00	

33.00

Part No	RPS 0330 0430 055					
Groove Dimension	ØA	x	ØB	x	F	
	33.00		43.00		5.50	

33.00

Part No	RPS 0330 0450 065					
Groove Dimension	ØA	x	ØB	x	F	
	33.00		45.00		6.50	

34.00

Part No	RPS 0340 0420 065					
Groove Dimension	ØA	x	ØB	x	F	
	34.00		42.00		6.50	

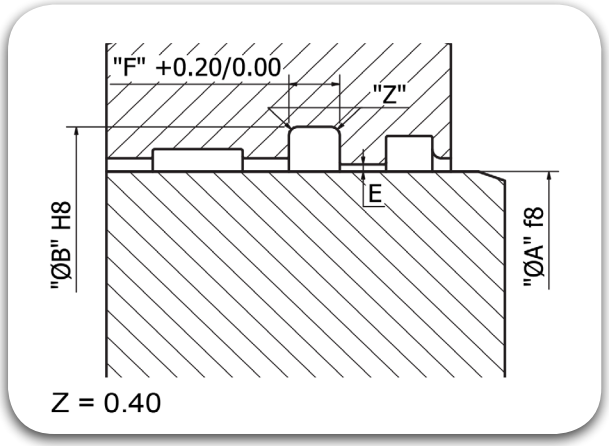

34.00

Part No	RPS 0340 0440 080					
Groove Dimension	ØA	x	ØB	x	F	
	34.00		44.00		8.00	

34.00

Part No	RPS 0340 0500 150					
Groove Dimension	ØA	x	ØB	x	F	
	34.00		50.00		15.00	

34.00

Part No	RPS 0340 0740 110					
Groove Dimension	ØA	x	ØB	x	F	
	34.00		74.00		11.00	

35.00

Part No	RPS 0350 0430 090					
Groove Dimension	ØA	x	ØB	x	F	
	35.00		43.00		9.00	

35.00

Part No	RPS 0350 0450 055					
Groove Dimension	ØA	x	ØB	x	F	
	35.00		45.00		5.50	

35.00

Part No	RPS 0350 0470 100					
Groove Dimension	ØA	x	ØB	x	F	
	35.00		47.00		10.00	

35.00

Part No	RPS 0350 0500 080					
Groove Dimension	ØA	x	ØB	x	F	
	35.00		50.00		8.00	

35.00

Part No	RPS 0350 0550 130					
Groove Dimension	ØA	x	ØB	x	F	
	35.00		55.00		13.00	

35.00

Part No	RPS 0350 0600 130					
Groove Dimension	ØA	x	ØB	x	F	
	35.00		60.00		13.00	

35.50

Part No	RPS 0350 0450 075					
Groove Dimension	ØA	x	ØB	x	F	
	35.50		45.00		7.50	

36.00

Part No	RPS 0360 0460 055					
Groove Dimension	ØA	x	ØB	x	F	
	36.00		46.00		5.50	

36.00

Part No	RPS 0360 0480 090					
Groove Dimension	ØA	x	ØB	x	F	
	36.00		48.00		9.00	

36.00

Part No	RPS 0360 0480 065					
Groove Dimension	ØA	x	ØB	x	F	
	36.00		48.00		6.50	

36.00

Part No	RPS 0360 0510 110					
Groove Dimension	ØA	x	ØB	x	F	
	36.00		51.00		11.00	

36.00

Part No	RPS 0360 0520 130					
Groove Dimension	ØA	x	ØB	x	F	
	36.00		52.00		13.00	

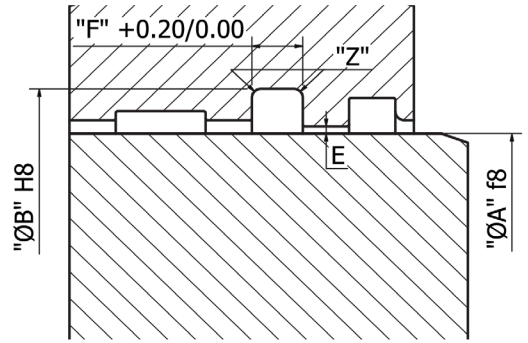

37.00

Part No	RPS 0370 0700 110					
Groove Dimension	ØA	x	ØB	x	F	
	37.00		70.00		11.00	

37.00

Part No	RPS 0370 0450 065					
Groove Dimension	ØA	x	ØB	x	F	
	37.00		45.00		6.50	

38.00

Part No	RPS 0380 0450 055					
Groove Dimension	ØA	x	ØB	x	F	
	38.00		45.00		5.50	

38.00

Part No	RPS 0380 0460 065					
Groove Dimension	ØA	x	ØB	x	F	
	38.00		46.00		6.50	

38.00

Part No	RPS 0380 0480 055					
Groove Dimension	ØA	x	ØB	x	F	
	38.00		48.00		5.50	

38.00

Part No	RPS 0380 0500 065					
Groove Dimension	ØA	x	ØB	x	F	
	38.00		50.00		6.50	

38.00

Part No	RPS 0380 0500 100					
Groove Dimension	ØA	x	ØB	x	F	
	38.00		50.00		10.00	

38.00

Part No	RPS 0380 0500 120					
Groove Dimension	ØA	x	ØB	x	F	
	38.00		50.00		12.00	

38.00

Part No	RPS 0380 0530 090					
Groove Dimension	ØA	x	ØB	x	F	
	38.00		53.00		9.00	

38.00

Part No	RPS 0380 0580 110					
Groove Dimension	ØA	x	ØB	x	F	
	38.00		58.00		11.00	

40.00

Part No	RPS 0400 0480 065					
Groove Dimension	ØA	x	ØB	x	F	
	40.00		48.00		6.50	

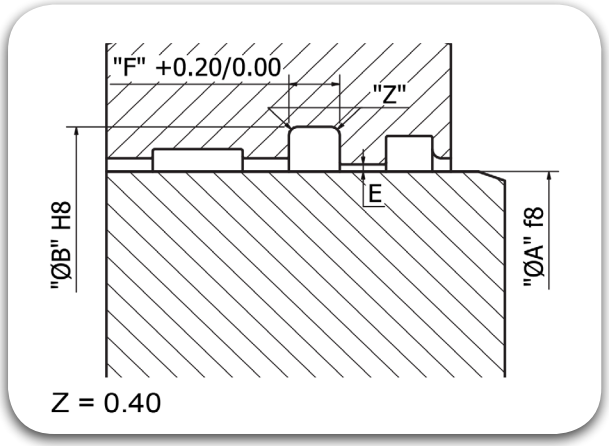

40.00

Part No	RPS 0400 0480 120					
Groove Dimension	ØA	x	ØB	x	F	
	40.00		48.00		12.00	

40.00

Part No	RPS 0400 0480 090					
Groove Dimension	ØA	x	ØB	x	F	
	40.00		48.00		9.00	

40.00

Part No	RPS 0400 0480 070					
Groove Dimension	ØA	x	ØB	x	F	
	40.00		48.00		7.00	

40.00

Part No	RPS 0400 0500 070					
Groove Dimension	ØA	x	ØB	x	F	
	40.00		50.00		7.00	

40.00

Part No	RPS 0400 0520 090					
Groove Dimension	ØA	x	ØB	x	F	
	40.00		52.00		9.00	

40.00

Part No	RPS 0400 0520 065					
Groove Dimension	ØA	x	ØB	x	F	
	40.00		52.00		6.50	

40.00

Part No	RPS 0400 0520 110					
Groove Dimension	ØA	x	ØB	x	F	
	40.00		52.00		11.00	

40.00

Part No	RPS 0400 0550 110					
Groove Dimension	ØA	x	ØB	x	F	
	40.00		55.00		11.00	

40.00

Part No	RPS 0400 0550 080					
Groove Dimension	ØA	x	ØB	x	F	
	40.00		55.00		8.00	

40.00

Part No	RPS 0400 0560 110					
Groove Dimension	ØA	x	ØB	x	F	
	40.00		56.00		11.00	

40.00

Part No	RPS 0400 0600 190					
Groove Dimension	ØA	x	ØB	x	F	
	40.00		60.00		19.00	

40.00

Part No	RPS 0400 0600 130					
Groove Dimension	ØA	x	ØB	x	F	
	40.00		60.00		13.00	

40.00

Part No	RPS 0400 0650 130					
Groove Dimension	ØA	x	ØB	x	F	
	40.00		65.00		13.00	

40.00

Part No	RPS 0400 0700 160					
Groove Dimension	ØA	x	ØB	x	F	
	40.00		70.00		16.00	

40.00

Part No	RPS 0400 0750 110					
Groove Dimension	ØA	x	ØB	x	F	
	40.00		75.00		11.00	

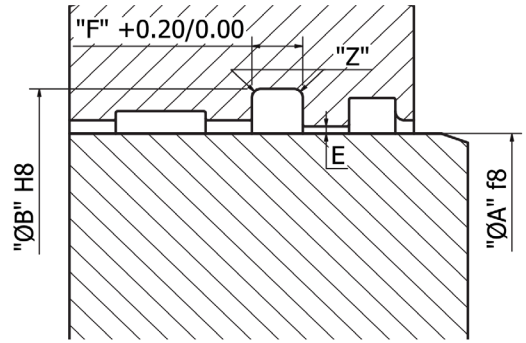

40.80

Part No	RPS 0408 0508 077					
Groove Dimension	ØA	x	ØB	x	F	
	40.80		50.80		7.70	

41.30

Part No	RPS 0413 0508 060					
Groove Dimension	ØA	x	ØB	x	F	
	41.30		50.80		6.00	

42.00

Part No	RPS 0420 0520 055					
Groove Dimension	ØA	x	ØB	x	F	
	42.00		52.00		5.50	

42.00

Part No	RPS 0420 0520 100					
Groove Dimension	ØA	x	ØB	x	F	
	42.00		52.00		10.00	

42.00

Part No	RPS 0420 0540 065					
Groove Dimension	ØA	x	ØB	x	F	
	42.00		54.00		6.50	

43.00

Part No	RPS 0430 0530 080					
Groove Dimension	ØA	x	ØB	x	F	
	43.00		53.00		8.00	

44.00

Part No	RPS 0440 0500 095					
Groove Dimension	ØA	x	ØB	x	F	
	44.00		50.00		9.50	

44.00

Part No	RPS 0440 0540 055					
Groove Dimension	ØA	x	ØB	x	F	
	44.00		54.00		5.50	

44.00

Part No	RPS 0440 0540 080					
Groove Dimension	ØA	x	ØB	x	F	
	44.00		54.00		8.00	

44.00

Part No	RPS 0440 0560 065					
Groove Dimension	ØA	x	ØB	x	F	
	44.00		56.00		6.50	

45.00

Part No	RPS 0450 0530 110					
Groove Dimension	ØA	x	ØB	x	F	
	45.00		53.00		11.00	

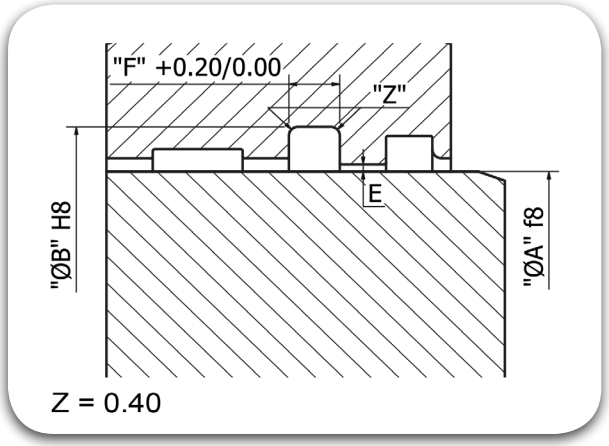

45.00

Part No	RPS 0450 0530 130					
Groove Dimension	ØA	x	ØB	x	F	
	45.00		53.00		13.00	

45.00

Part No	RPS 0450 0550 090					
Groove Dimension	ØA	x	ØB	x	F	
	45.00		55.00		9.00	

45.00

Part No	RPS 0450 0550 130					
Groove Dimension	ØA	x	ØB	x	F	
	45.00		55.00		13.00	

45.00

Part No	RPS 0450 0550 070					
Groove Dimension	ØA	x	ØB	x	F	
	45.00		55.00		7.00	

45.00

Part No	RPS 0450 0580 110					
Groove Dimension	ØA	x	ØB	x	F	
	45.00		58.00		11.00	

45.00

Part No	RPS 0450 0600 080					
Groove Dimension	ØA	x	ØB	x	F	
	45.00		60.00		8.00	

45.00

Part No	RPS 0450 0600 130					
Groove Dimension	ØA	x	ØB	x	F	
	45.00		60.00		13.00	

45.00

Part No	RPS 0450 0700 130					
Groove Dimension	ØA	x	ØB	x	F	
	45.00		70.00		13.00	

46.00

Part No	RPS 0460 0560 055					
Groove Dimension	ØA	x	ØB	x	F	
	46.00		56.00		5.50	

46.00

Part No	RPS 0460 0560 080					
Groove Dimension	ØA	x	ØB	x	F	
	46.00		56.00		8.00	

46.00

Part No	RPS 0460 0580 065					
Groove Dimension	ØA	x	ØB	x	F	
	46.00		58.00		6.50	

46.30

Part No	RPS 0463 0640 095					
Groove Dimension	ØA	x	ØB	x	F	
	46.30		64.00		9.50	

48.00

Part No	RPS 0480 0600 065					
Groove Dimension	ØA	x	ØB	x	F	
	48.00		60.00		6.50	

48.00

Part No	RPS 0480 0600 100					
Groove Dimension	ØA	x	ØB	x	F	
	48.00		60.00		10.00	

48.00

Part No	RPS 0480 0630 110					
Groove Dimension	ØA	x	ØB	x	F	
	48.00		63.00		11.00	

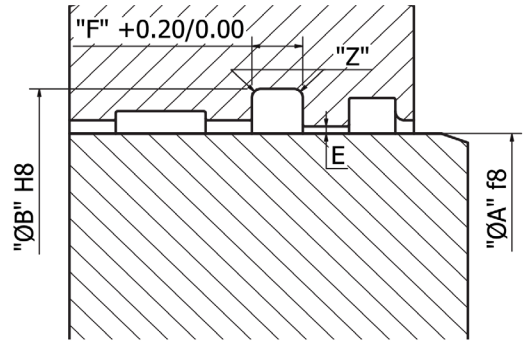

50.00

Part No	RPS 0500 0580 055					
Groove Dimension	ØA	x	ØB	x	F	
	50.00		58.00		5.50	

50.00

Part No	RPS 0500 0600 120					
Groove Dimension	ØA	x	ØB	x	F	
	50.00		60.00		12.00	

50.00

Part No	RPS 0500 0600 055					
Groove Dimension	ØA	x	ØB	x	F	
	50.00		60.00		5.50	

50.00

Part No	RPS 0500 0600 090					
Groove Dimension	ØA	x	ØB	x	F	
	50.00		60.00		9.00	

50.00

Part No	RPS 0500 0650 080					
Groove Dimension	ØA	x	ØB	x	F	
	50.00		65.00		8.00	

50.00

Part No	RPS 0500 0680 110					
Groove Dimension	ØA	x	ØB	x	F	
	50.00		68.00		11.00	

50.00

Part No	RPS 0500 0700 160					
Groove Dimension	ØA	x	ØB	x	F	
	50.00		70.00		16.00	

50.00

Part No	RPS 0500 0700 190					
Groove Dimension	ØA	x	ØB	x	F	
	50.00		70.00		19.00	

50.00

Part No	RPS 0500 0720 130					
Groove Dimension	ØA	x	ØB	x	F	
	50.00		72.00		13.00	

50.00

Part No	RPS 0500 0750 130					
Groove Dimension	ØA	x	ØB	x	F	
	50.00		75.00		13.00	

50.00

Part No	RPS 0500 0800 110					
Groove Dimension	ØA	x	ØB	x	F	
	50.00		80.00		11.00	

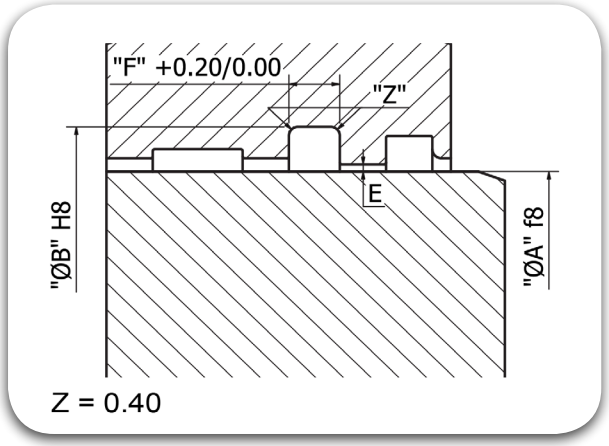

51.00

Part No	RPS 0510 0630 065				
Groove Dimension	ØA	x	ØB	x	F
	51.00		63.00		6.50

51.00

Part No	RPS 0510 0630 100				
Groove Dimension	ØA	x	ØB	x	F
	51.00		63.00		10.00

52.00

Part No	RPS 0520 0600 065				
Groove Dimension	ØA	x	ØB	x	F
	52.00		60.00		6.50

52.00

Part No	RPS 0520 0620 130				
Groove Dimension	ØA	x	ØB	x	F
	52.00		62.00		13.00

52.00

Part No	RPS 0520 0640 065				
Groove Dimension	ØA	x	ØB	x	F
	52.00		64.00		6.50

52.00

Part No	RPS 0520 0720 130				
Groove Dimension	ØA	x	ØB	x	F
	52.00		72.00		13.00

53.00

Part No	RPS 0530 0630 055				
Groove Dimension	ØA	x	ØB	x	F
	53.00		63.00		5.50

53.00

Part No	RPS 0530 0630 080				
Groove Dimension	ØA	x	ØB	x	F
	53.00		63.00		8.00

53.00

Part No	RPS 0530 0630 130				
Groove Dimension	ØA	x	ØB	x	F
	53.00		63.00		13.00

53.00

Part No	RPS 0530 0650 065				
Groove Dimension	ØA	x	ØB	x	F
	53.00		65.00		6.50

54.00

Part No	RPS 0540 0700 130				
Groove Dimension	ØA	x	ØB	x	F
	54.00		70.00		13.00

55.00

Part No	RPS 0550 0650 130				
Groove Dimension	ØA	x	ØB	x	F
	55.00		65.00		13.00

55.00

Part No	RPS 0550 0650 055				
Groove Dimension	ØA	x	ØB	x	F
	55.00		65.00		5.50

55.00

Part No	RPS 0550 0700 110		
Groove Dimension	ØA	ØB	F
	55.00	70.00	11.00

55.00

Part No	RPS 0550 0700 080		
Groove Dimension	ØA	ØB	F
	55.00	70.00	8.00

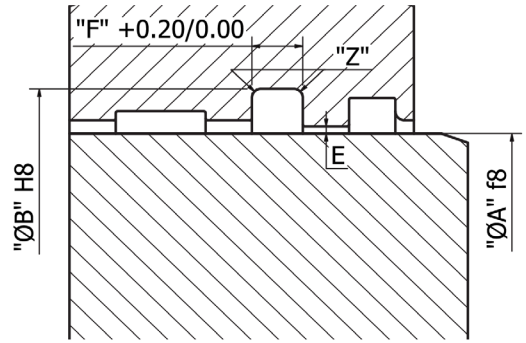

55.00

Part No	RPS 0550 0700 120		
Groove Dimension	ØA	ØB	F
	55.00	70.00	12.00

55.00

Part No	RPS 0550 0750 110		
Groove Dimension	ØA	ØB	F
	55.00	75.00	11.00

55.00

Part No	RPS 0550 0800 130		
Groove Dimension	ØA	ØB	F
	55.00	80.00	13.00

55.00

Part No	RPS 0550 0800 150		
Groove Dimension	ØA	ØB	F
	55.00	80.00	15.00

55.00

Part No	RPS 0550 0800 110		
Groove Dimension	ØA	ØB	F
	55.00	80.00	11.00

55.00

Part No	RPS 0550 0850 160		
Groove Dimension	ØA	ØB	F
	55.00	85.00	16.00

56.00

Part No	RPS 0560 0660 080		
Groove Dimension	ØA	ØB	F
	56.00	66.00	8.00

56.00

Part No	RPS 0560 0660 110		
Groove Dimension	ØA	ØB	F
	56.00	66.00	11.00

56.00

Part No	RPS 0560 0660 120		
Groove Dimension	ØA	ØB	F
	56.00	66.00	12.00

56.00

Part No	RPS 0560 0760 130		
Groove Dimension	ØA	ØB	F
	56.00	76.00	13.00

57.00

Part No	RPS 0570 0730 120		
Groove Dimension	ØA	ØB	F
	57.00	73.00	12.00

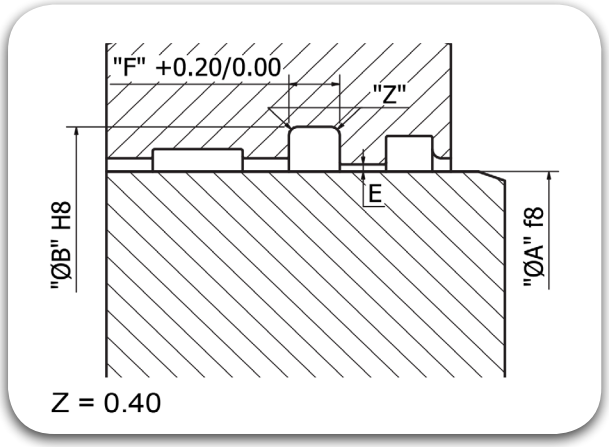

60.00

Part No	RPS 0600 0750 080					
Groove Dimension	ØA	x	ØB	x	F	
	60.00		75.00		8.00	

60.00

Part No	RPS 0600 0760 130					
Groove Dimension	ØA	x	ØB	x	F	
	60.00		76.00		13.00	

60.00

Part No	RPS 0600 0800 160					
Groove Dimension	ØA	x	ØB	x	F	
	60.00		80.00		16.00	

60.00

Part No	RPS 0600 0800 190					
Groove Dimension	ØA	x	ØB	x	F	
	60.00		80.00		19.00	

60.00

Part No	RPS 0600 0850 135					
Groove Dimension	ØA	x	ØB	x	F	
	60.00		85.00		13.50	

60.00

Part No	RPS 0600 0850 110					
Groove Dimension	ØA	x	ØB	x	F	
	60.00		85.00		11.00	

60.00

Part No	RPS 0600 0900 160					
Groove Dimension	ØA	x	ØB	x	F	
	60.00		90.00		16.00	

62.00

Part No	RPS 0620 0720 120					
Groove Dimension	ØA	x	ØB	x	F	
	62.00		72.00		12.00	

63.00

Part No	RPS 0630 0730 055					
Groove Dimension	ØA	x	ØB	x	F	
	63.00		73.00		5.50	

63.00

Part No	RPS 0630 0730 080					
Groove Dimension	ØA	x	ØB	x	F	
	63.00		73.00		8.00	

63.00

Part No	RPS 0630 0730 110					
Groove Dimension	ØA	x	ØB	x	F	
	63.00		73.00		11.00	

63.00

Part No	RPS 0630 0750 130					
Groove Dimension	ØA	x	ØB	x	F	
	63.00		75.00		13.00	

63.00

Part No	RPS 0630 0750 100					
Groove Dimension	ØA	x	ØB	x	F	
	63.00		75.00		10.00	

63.00

Part No	RPS 0630 0780 110					
Groove Dimension	ØA	x	ØB	x	F	
	63.00		78.00		11.00	

63.00

Part No	RPS 0630 0830 160					
Groove Dimension	ØA	x	ØB	x	F	
	63.00		83.00		16.00	

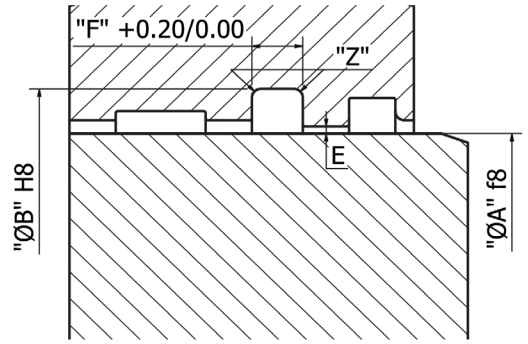

63.00

Part No	RPS 0630 0830 130					
Groove Dimension	ØA	x	ØB	x	F	
	63.00		83.00		13.00	

64.00

Part No	RPS 0640 0800 130					
Groove Dimension	ØA	x	ØB	x	F	
	64.00		80.00		13.00	

65.00

Part No	RPS 0650 0750 055					
Groove Dimension	ØA	x	ØB	x	F	
	65.00		75.00		5.50	

65.00

Part No	RPS 0650 0750 110					
Groove Dimension	ØA	x	ØB	x	F	
	65.00		75.00		11.00	

65.00

Part No	RPS 0650 0750 100					
Groove Dimension	ØA	x	ØB	x	F	
	65.00		75.00		10.00	

65.00

Part No	RPS 0650 0750 080					
Groove Dimension	ØA	x	ØB	x	F	
	65.00		75.00		8.00	

65.00

Part No	RPS 0650 0800 130					
Groove Dimension	ØA	x	ØB	x	F	
	65.00		80.00		13.00	

65.00

Part No	RPS 0650 0800 080					
Groove Dimension	ØA	x	ØB	x	F	
	65.00		80.00		8.00	

65.00

Part No	RPS 0650 0800 120					
Groove Dimension	ØA	x	ØB	x	F	
	65.00		80.00		12.00	

65.00

Part No	RPS 0650 0850 110					
Groove Dimension	ØA	x	ØB	x	F	
	65.00		85.00		11.00	

65.00

Part No	RPS 0650 0850 160					
Groove Dimension	ØA	x	ØB	x	F	
	65.00		85.00		16.00	

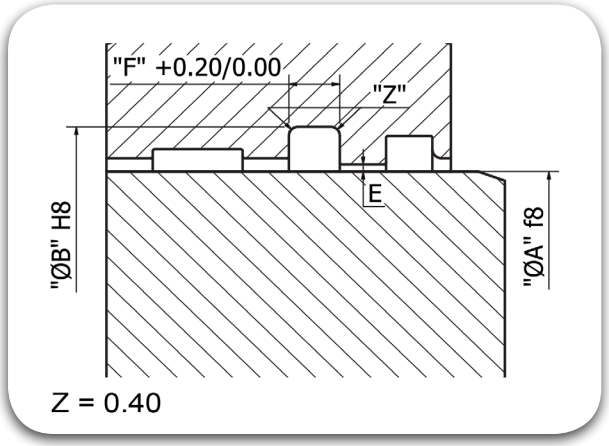

66.00

Part No	RPS 0660 0760 090					
Groove Dimension	ØA	x	ØB	x	F	
	66.00		76.00		9.00	

66.00

Part No	RPS 0660 0800 110					
Groove Dimension	ØA	x	ØB	x	F	
	66.00		80.00		11.00	

66.00

Part No	RPS 0660 0800 140					
Groove Dimension	ØA	x	ØB	x	F	
	66.00		80.00		14.00	

67.00

Part No	RPS 0670 0770 130					
Groove Dimension	ØA	x	ØB	x	F	
	67.00		77.00		13.00	

70.00

Part No	RPS 0700 0800 080					
Groove Dimension	ØA	x	ØB	x	F	
	70.00		80.00		8.00	

70.00

Part No	RPS 0700 0820 100					
Groove Dimension	ØA	x	ØB	x	F	
	70.00		82.00		10.00	

70.00

Part No	RPS 0700 0850 110					
Groove Dimension	ØA	x	ØB	x	F	
	70.00		85.00		11.00	

70.00

Part No	RPS 0700 0850 130					
Groove Dimension	ØA	x	ØB	x	F	
	70.00		85.00		13.00	

70.00

Part No	RPS 0700 0900 110					
Groove Dimension	ØA	x	ØB	x	F	
	70.00		90.00		11.00	

70.00

Part No	RPS 0700 0900 160					
Groove Dimension	ØA	x	ØB	x	F	
	70.00		90.00		16.00	

70.00

Part No	RPS 0700 0900 190					
Groove Dimension	ØA	x	ØB	x	F	
	70.00		90.00		19.00	

70.00

Part No	RPS 0700 0950 130					
Groove Dimension	ØA	x	ØB	x	F	
	70.00		95.00		13.00	

70.00

Part No	RPS 0700 0950 110					
Groove Dimension	ØA	x	ØB	x	F	
	70.00		95.00		11.00	

70.00

Part No	RPS 0700 1000 160
Groove Dimension	ØA 70.00 x ØB 100.00 x F 16.00

73.00

Part No	RPS 0730 0850 100
Groove Dimension	ØA 73.00 x ØB 85.00 x F 10.00

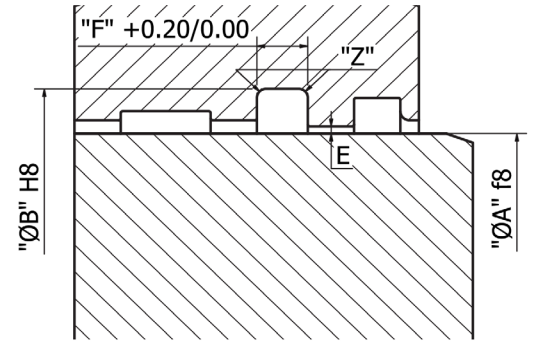

74.00

Part No	RPS 0740 0900 130
Groove Dimension	ØA 74.00 x ØB 90.00 x F 13.00

75.00

Part No	RPS 0750 0850 055
Groove Dimension	ØA 75.00 x ØB 85.00 x F 5.50

75.00

Part No	RPS 0750 0850 110
Groove Dimension	ØA 75.00 x ØB 85.00 x F 11.00

75.00

Part No	RPS 0750 0850 080
Groove Dimension	ØA 75.00 x ØB 85.00 x F 8.00

75.00

Part No	RPS 0750 0910 130
Groove Dimension	ØA 75.00 x ØB 91.00 x F 13.00

75.00

Part No	RPS 0750 0950 145
Groove Dimension	ØA 75.00 x ØB 95.00 x F 14.50

75.00

Part No	RPS 0750 0950 110
Groove Dimension	ØA 75.00 x ØB 95.00 x F 11.00

75.00

Part No	RPS 0750 1000 130
Groove Dimension	ØA 75.00 x ØB 100.00 x F 13.00

75.00

Part No	RPS 0750 1000 200
Groove Dimension	ØA 75.00 x ØB 100.00 x F 20.00

76.00

Part No	RPS 0760 0920 130
Groove Dimension	ØA 76.00 x ØB 92.00 x F 13.00

78.00

Part No	RPS 0780 0930 115
Groove Dimension	ØA 78.00 x ØB 93.00 x F 11.50

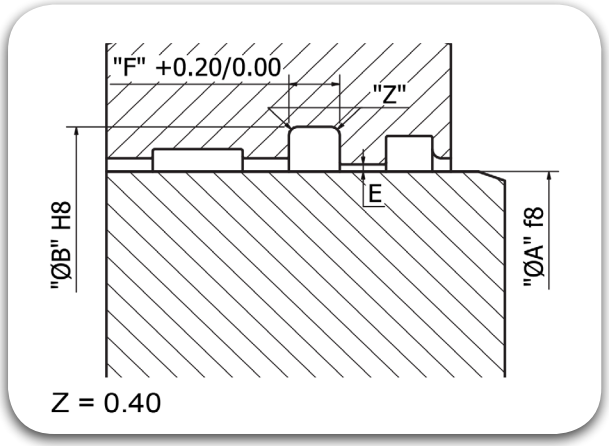

80.00

Part No	RPS 0800 0900 080					
Groove Dimension	ØA	x	ØB	x	F	
	80.00		90.00		8.00	

80.00

Part No	RPS 0800 0950 080					
Groove Dimension	ØA	x	ØB	x	F	
	80.00		95.00		8.00	

80.00

Part No	RPS 0800 0950 110					
Groove Dimension	ØA	x	ØB	x	F	
	80.00		95.00		11.00	

80.00

Part No	RPS 0800 1000 130					
Groove Dimension	ØA	x	ØB	x	F	
	80.00		100.00		13.00	

80.00

Part No	RPS 0800 1000 110					
Groove Dimension	ØA	x	ØB	x	F	
	80.00		100.00		11.00	

80.00

Part No	RPS 0800 1000 160					
Groove Dimension	ØA	x	ØB	x	F	
	80.00		100.00		16.00	

80.00

Part No	RPS 0800 1050 130					
Groove Dimension	ØA	x	ØB	x	F	
	80.00		105.00		13.00	

80.00

Part No	RPS 0800 1050 230					
Groove Dimension	ØA	x	ØB	x	F	
	80.00		105.00		23.00	

80.00

Part No	RPS 0800 1100 160					
Groove Dimension	ØA	x	ØB	x	F	
	80.00		110.00		16.00	

82.00

Part No	RPS 0820 0920 110					
Groove Dimension	ØA	x	ØB	x	F	
	82.00		92.00		11.00	

83.00

Part No	RPS 0830 0950 100					
Groove Dimension	ØA	x	ØB	x	F	
	83.00		95.00		10.00	

85.00

Part No	RPS 0850 0950 550					
Groove Dimension	ØA	x	ØB	x	F	
	85.00		95.00		5.50	

85.00

Part No	RPS 0850 1000 080					
Groove Dimension	ØA	x	ØB	x	F	
	85.00		100.00		8.00	

85.00

Part No	RPS 0850 1000 120		
Groove Dimension	ØA	ØB	F
	85.00	100.00	12.00

85.00

Part No	RPS 0850 1010 130		
Groove Dimension	ØA	ØB	F
	85.00	101.00	13.00

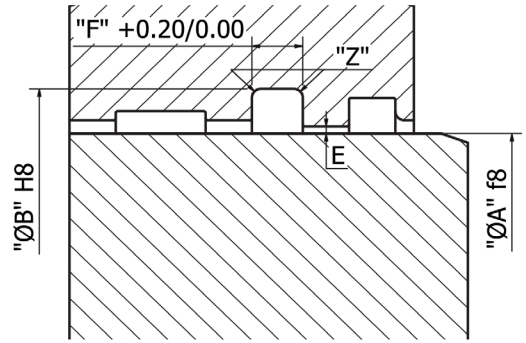

85.00

Part No	RPS 0850 1050 190		
Groove Dimension	ØA	ØB	F
	85.00	105.00	19.00

85.00

Part No	RPS 0850 1100 130		
Groove Dimension	ØA	ØB	F
	85.00	110.00	13.00

85.00

Part No	RPS 0850 1150 160		
Groove Dimension	ØA	ØB	F
	85.00	115.00	16.00

86.00

Part No	RPS 0860 1010 130		
Groove Dimension	ØA	ØB	F
	86.00	101.00	13.00

88.00

Part No	RPS 0880 1000 100		
Groove Dimension	ØA	ØB	F
	88.00	100.00	10.00

88.90

Part No	RPS 0889 1143 150		
Groove Dimension	ØA	ØB	F
	88.90	114.30	15.00

90.00

Part No	RPS 0900 1000 110		
Groove Dimension	ØA	ØB	F
	90.00	100.00	11.00

90.00

Part No	RPS 0900 1000 055		
Groove Dimension	ØA	ØB	F
	90.00	100.00	5.50

90.00

Part No	RPS 0900 1000 080		
Groove Dimension	ØA	ØB	F
	90.00	100.00	8.00

90.00

Part No	RPS 0900 1050 080		
Groove Dimension	ØA	ØB	F
	90.00	105.00	8.00

90.00

Part No	RPS 0900 1100 110		
Groove Dimension	ØA	ØB	F
	90.00	110.00	11.00

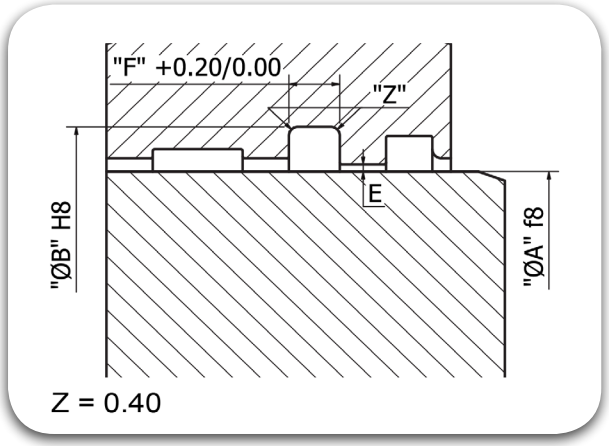

90.00

Part No	RPS 0900 1100 160					
Groove Dimension	ØA	x	ØB	x	F	
	90.00		110.00		16.00	

90.00

Part No	RPS 0900 1100 190					
Groove Dimension	ØA	x	ØB	x	F	
	90.00		110.00		19.00	

90.00

Part No	RPS 0900 1150 130					
Groove Dimension	ØA	x	ØB	x	F	
	90.00		115.00		13.00	

90.00

Part No	RPS 0900 1150 160					
Groove Dimension	ØA	x	ØB	x	F	
	90.00		115.00		16.00	

90.00

Part No	RPS 0900 1150 230					
Groove Dimension	ØA	x	ØB	x	F	
	90.00		115.00		23.00	

90.00

Part No	RPS 0900 1200 160					
Groove Dimension	ØA	x	ØB	x	F	
	90.00		120.00		16.00	

94.00

Part No	RPS 0940 1100 130					
Groove Dimension	ØA	x	ØB	x	F	
	94.00		110.00		13.00	

95.00

Part No	RPS 0950 1050 055					
Groove Dimension	ØA	x	ØB	x	F	
	95.00		105.00		5.50	

95.00

Part No	RPS 0950 1070 100					
Groove Dimension	ØA	x	ØB	x	F	
	95.00		107.00		10.00	

95.00

Part No	RPS 0950 1100 160					
Groove Dimension	ØA	x	ØB	x	F	
	95.00		110.00		16.00	

95.00

Part No	RPS 0950 1120 120					
Groove Dimension	ØA	x	ØB	x	F	
	95.00		112.00		12.00	

95.00

Part No	RPS 0950 1150 160					
Groove Dimension	ØA	x	ØB	x	F	
	95.00		115.00		16.00	

95.00

Part No	RPS 0950 1150 190					
Groove Dimension	ØA	x	ØB	x	F	
	95.00		115.00		19.00	

95.00

Part No	RPS 0950 1200 200					
Groove Dimension	ØA	x	ØB	x	F	
	95.00		120.00		20.00	

99.00

Part No	RPS 0990 1090 150					
Groove Dimension	ØA	x	ØB	x	F	
	99.00		109.00		15.00	

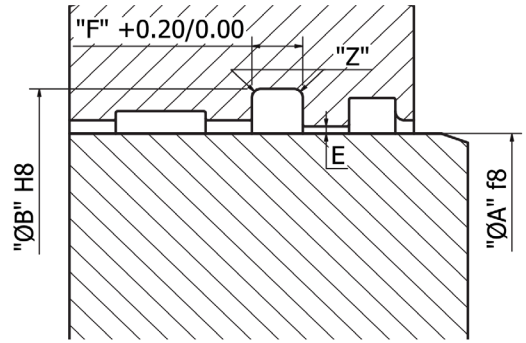

99.00

Part No	RPS 0990 1150 130					
Groove Dimension	ØA	x	ØB	x	F	
	99.00		115.00		13.00	

100.00

Part No	RPS 1000 1100 055					
Groove Dimension	ØA	x	ØB	x	F	
	100.00		110.00		5.50	

100.00

Part No	RPS 1000 1120 100					
Groove Dimension	ØA	x	ØB	x	F	
	100.00		112.00		10.00	

100.00

Part No	RPS 1000 1150 160					
Groove Dimension	ØA	x	ØB	x	F	
	100.00		115.00		16.00	

100.00

Part No	RPS 1000 1200 110					
Groove Dimension	ØA	x	ØB	x	F	
	100.00		120.00		11.00	

100.00

Part No	RPS 1000 1200 160					
Groove Dimension	ØA	x	ØB	x	F	
	100.00		120.00		16.00	

100.00

Part No	RPS 1000 1200 190					
Groove Dimension	ØA	x	ØB	x	F	
	100.00		120.00		19.00	

100.00

Part No	RPS 1000 1250 200					
Groove Dimension	ØA	x	ØB	x	F	
	100.00		125.00		20.00	

100.00

Part No	RPS 1000 1300 130					
Groove Dimension	ØA	x	ØB	x	F	
	100.00		130.00		13.00	

100.00

Part No	RPS 1000 1300 160					
Groove Dimension	ØA	x	ØB	x	F	
	100.00		130.00		16.00	

102.00

Part No	RPS 1020 1120 120					
Groove Dimension	ØA	x	ØB	x	F	
	102.00		112.00		12.00	

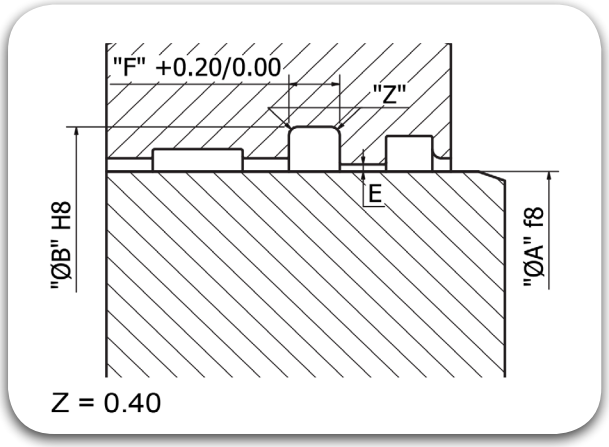

103.00

Part No	RPS 1030 1150 100					
Groove Dimension	ØA	x	ØB	x	F	
	103.00		115.00		10.00	

105.00

Part No	RPS 1050 1170 100					
Groove Dimension	ØA	x	ØB	x	F	
	105.00		117.00		10.00	

105.00

Part No	RPS 1050 1200 120					
Groove Dimension	ØA	x	ØB	x	F	
	105.00		120.00		12.00	

105.00

Part No	RPS 1050 1200 090					
Groove Dimension	ØA	x	ØB	x	F	
	105.00		120.00		9.00	

105.00

Part No	RPS 1050 1250 110					
Groove Dimension	ØA	x	ØB	x	F	
	105.00		125.00		11.00	

105.00

Part No	RPS 1050 1300 130					
Groove Dimension	ØA	x	ØB	x	F	
	105.00		130.00		13.00	

110.00

Part No	RPS 1100 1300 130					
Groove Dimension	ØA	x	ØB	x	F	
	110.00		130.00		13.00	

110.00

Part No	RPS 1100 1300 110					
Groove Dimension	ØA	x	ØB	x	F	
	110.00		130.00		11.00	

110.00

Part No	RPS 1100 1300 190					
Groove Dimension	ØA	x	ØB	x	F	
	110.00		130.00		19.00	

110.00

Part No	RPS 1100 1350 160					
Groove Dimension	ØA	x	ØB	x	F	
	110.00		135.00		16.00	

110.00

Part No	RPS 1100 1400 160					
Groove Dimension	ØA	x	ØB	x	F	
	110.00		140.00		16.00	

111.00

Part No	RPS 1110 1210 065					
Groove Dimension	ØA	x	ØB	x	F	
	111.00		121.00		6.50	

112.00

Part No	RPS 1120 1270 120					
Groove Dimension	ØA	x	ØB	x	F	
	112.00		127.00		12.00	

113.00

Part No	RPS 1130 1250 105					
Groove Dimension	ØA	x	ØB	x	F	
	113.00		125.00		10.50	

115.00

Part No	RPS 1150 1300 080					
Groove Dimension	ØA	x	ØB	x	F	
	115.00		130.00		8.00	

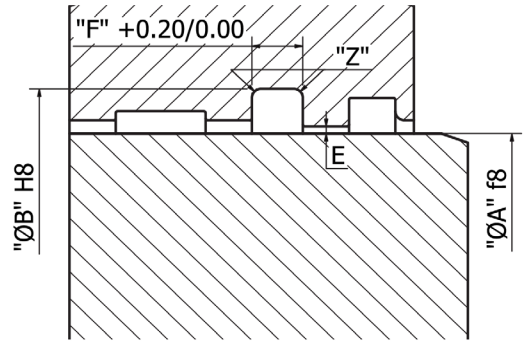

115.00

Part No	RPS 1150 1300 120					
Groove Dimension	ØA	x	ØB	x	F	
	115.00		130.00		12.00	

115.00

Part No	RPS 1150 1300 160					
Groove Dimension	ØA	x	ØB	x	F	
	115.00		130.00		16.00	

115.00

Part No	RPS 1150 1300 110					
Groove Dimension	ØA	x	ØB	x	F	
	115.00		130.00		11.00	

115.00

Part No	RPS 1150 1400 160					
Groove Dimension	ØA	x	ØB	x	F	
	115.00		140.00		16.00	

115.00

Part No	RPS 1150 1400 230					
Groove Dimension	ØA	x	ØB	x	F	
	115.00		140.00		23.00	

118.00

Part No	RPS 1180 1300 110					
Groove Dimension	ØA	x	ØB	x	F	
	118.00		130.00		11.00	

120.00

Part No	RPS 1200 1300 150					
Groove Dimension	ØA	x	ØB	x	F	
	120.00		130.00		15.00	

120.00

Part No	RPS 1200 1350 160					
Groove Dimension	ØA	x	ØB	x	F	
	120.00		135.00		16.00	

120.00

Part No	RPS 1200 1400 130					
Groove Dimension	ØA	x	ØB	x	F	
	120.00		140.00		13.00	

120.00

Part No	RPS 1200 1400 110					
Groove Dimension	ØA	x	ØB	x	F	
	120.00		140.00		11.00	

120.00

Part No	RPS 1200 1450 200					
Groove Dimension	ØA	x	ØB	x	F	
	120.00		145.00		20.00	

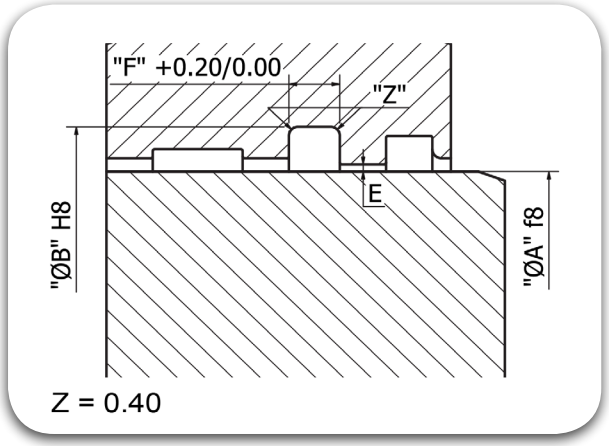

123.00

Part No	RPS 1230 1350 100					
Groove Dimension	ØA	x	ØB	x	F	
	123.00		135.00		10.00	

125.00

Part No	RPS 1250 1370 100					
Groove Dimension	ØA	x	ØB	x	F	
	125.00		137.00		10.00	

125.00

Part No	RPS 1250 1450 190					
Groove Dimension	ØA	x	ØB	x	F	
	125.00		145.00		19.00	

125.00

Part No	RPS 1250 1450 130					
Groove Dimension	ØA	x	ØB	x	F	
	125.00		145.00		13.00	

125.00

Part No	RPS 1250 1550 160					
Groove Dimension	ØA	x	ØB	x	F	
	125.00		155.00		16.00	

130.00

Part No	RPS 1300 1450 120					
Groove Dimension	ØA	x	ØB	x	F	
	130.00		145.00		12.00	

130.00

Part No	RPS 1300 1450 160					
Groove Dimension	ØA	x	ØB	x	F	
	130.00		145.00		16.00	

130.00

Part No	RPS 1300 1550 200					
Groove Dimension	ØA	x	ØB	x	F	
	130.00		155.00		20.00	

130.00

Part No	RPS 1300 1600 230					
Groove Dimension	ØA	x	ØB	x	F	
	130.00		160.00		23.00	

133.00

Part No	RPS 1330 1450 100					
Groove Dimension	ØA	x	ØB	x	F	
	133.00		145.00		10.00	

135.00

Part No	RPS 1350 1500 160					
Groove Dimension	ØA	x	ØB	x	F	
	135.00		150.00		16.00	

135.00

Part No	RPS 1350 1550 160					
Groove Dimension	ØA	x	ØB	x	F	
	135.00		155.00		16.00	

135.00

Part No	RPS 1350 1600 130					
Groove Dimension	ØA	x	ØB	x	F	
	135.00		160.00		13.00	

135.00

Part No	RPS 1350 1600 160					
Groove Dimension	ØA	x	ØB	x	F	
	135.00		160.00		16.00	

138.00

Part No	RPS 1380 1500 100					
Groove Dimension	ØA	x	ØB	x	F	
	138.00		150.00		10.00	

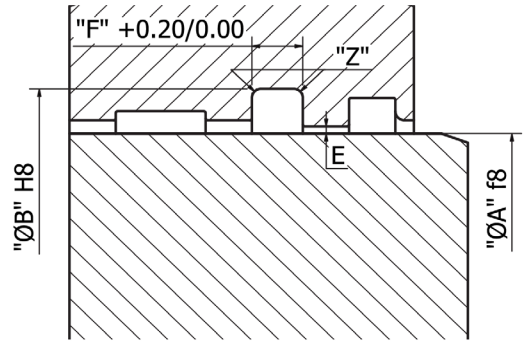

140.00

Part No	RPS 1400 1600 110					
Groove Dimension	ØA	x	ØB	x	F	
	140.00		160.00		11.00	

140.00

Part No	RPS 1400 1600 130					
Groove Dimension	ØA	x	ØB	x	F	
	140.00		160.00		13.00	

140.00

Part No	RPS 1400 1650 130					
Groove Dimension	ØA	x	ØB	x	F	
	140.00		165.00		13.00	

140.00

Part No	RPS 1400 1650 160					
Groove Dimension	ØA	x	ØB	x	F	
	140.00		165.00		16.00	

145.00

Part No	RPS 1450 1700 200					
Groove Dimension	ØA	x	ØB	x	F	
	145.00		170.00		20.00	

150.00

Part No	RPS 1500 1650 120					
Groove Dimension	ØA	x	ØB	x	F	
	150.00		165.00		12.00	

150.00

Part No	RPS 1500 1700 100					
Groove Dimension	ØA	x	ØB	x	F	
	150.00		170.00		10.00	

150.00

Part No	RPS 1500 1700 190					
Groove Dimension	ØA	x	ØB	x	F	
	150.00		170.00		19.00	

155.00

Part No	RPS 1550 1700 120					
Groove Dimension	ØA	x	ØB	x	F	
	155.00		170.00		12.00	

158.00

Part No	RPS 1580 1700 100					
Groove Dimension	ØA	x	ØB	x	F	
	158.00		170.00		10.00	

160.00

Part No	RPS 1600 1750 120					
Groove Dimension	ØA	x	ØB	x	F	
	160.00		175.00		12.00	

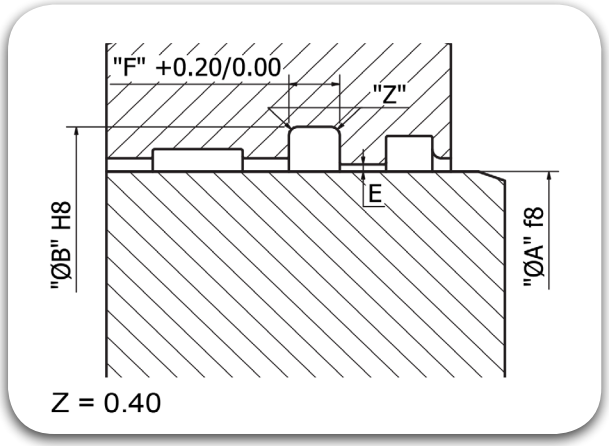

165.00

Part No	RPS 1650 1800 120					
Groove Dimension	ØA	x	ØB	x	F	
	165.00		180.00		12.00	

165.00

Part No	RPS 1650 1850 160					
Groove Dimension	ØA	x	ØB	x	F	
	165.00		185.00		16.00	

170.00

Part No	RPS 1700 1850 120					
Groove Dimension	ØA	x	ØB	x	F	
	170.00		185.00		12.00	

170.00

Part No	RPS 1700 2000 160					
Groove Dimension	ØA	x	ØB	x	F	
	170.00		200.00		16.00	

170.00

Part No	RPS 1700 2000 190					
Groove Dimension	ØA	x	ØB	x	F	
	170.00		200.00		19.00	

180.00

Part No	RPS 1800 1950 120					
Groove Dimension	ØA	x	ØB	x	F	
	180.00		195.00		12.00	

180.00

Part No	RPS 1800 2000 130					
Groove Dimension	ØA	x	ØB	x	F	
	180.00		200.00		13.00	

180.00

Part No	RPS 1800 2200 210					
Groove Dimension	ØA	x	ØB	x	F	
	180.00		220.00		21.00	

185.00

Part No	RPS 1850 2100 130					
Groove Dimension	ØA	x	ØB	x	F	
	185.00		210.00		13.00	

188.00

Part No	RPS 1880 2000 100					
Groove Dimension	ØA	x	ØB	x	F	
	188.00		200.00		10.00	

190.00

Part No	RPS 1900 2200 230					
Groove Dimension	ØA	x	ØB	x	F	
	190.00		220.00		23.00	

200.00

Part No	RPS 2000 2200 160					
Groove Dimension	ØA	x	ØB	x	F	
	200.00		220.00		16.00	

210.00

Part No	RPS 2100 2400 180					
Groove Dimension	ØA	x	ØB	x	F	
	210.00		240.00		18.00	

220.00

Part No	RPS 2200 2500 220					
Groove Dimension	ØA	x	ØB	x	F	
	220.00		250.00		22.00	

220.00

Part No	RPS 2200 2500 160					
Groove Dimension	ØA	x	ØB	x	F	
	220.00		250.00		16.00	

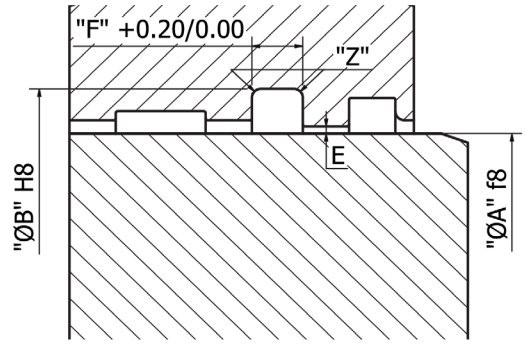

225.00

Part No	RPS 2250 2450 160					
Groove Dimension	ØA	x	ØB	x	F	
	225.00		245.00		16.00	

230.00

Part No	RPS 2300 2450 120					
Groove Dimension	ØA	x	ØB	x	F	
	230.00		245.00		12.00	

230.00

Part No	RPS 2300 2500 160					
Groove Dimension	ØA	x	ØB	x	F	
	230.00		250.00		16.00	

240.00

Part No	RPS 2400 2700 230					
Groove Dimension	ØA	x	ØB	x	F	
	240.00		270.00		23.00	

250.00

Part No	RPS 2500 2700 160					
Groove Dimension	ØA	x	ØB	x	F	
	250.00		270.00		16.00	

270.00

Part No	RPS 2700 2900 160					
Groove Dimension	ØA	x	ØB	x	F	
	270.00		290.00		16.00	

250.00

Part No	RPS 2500 2800 190					
Groove Dimension	ØA	x	ØB	x	F	
	250.00		280.00		19.00	

270.00

Part No	RPS 2700 2900 180					
Groove Dimension	ØA	x	ØB	x	F	
	270.00		290.00		18.00	

270.00

Part No	RPS 2700 3000 160					
Groove Dimension	ØA	x	ØB	x	F	
	270.00		300.00		16.00	

280.00

Part No	RPS 2800 3000 160					
Groove Dimension	ØA	x	ØB	x	F	
	280.00		300.00		16.00	

290.00

Part No	RPS 2900 3200 190					
Groove Dimension	ØA	x	ØB	x	F	
	290.00		320.00		19.00	

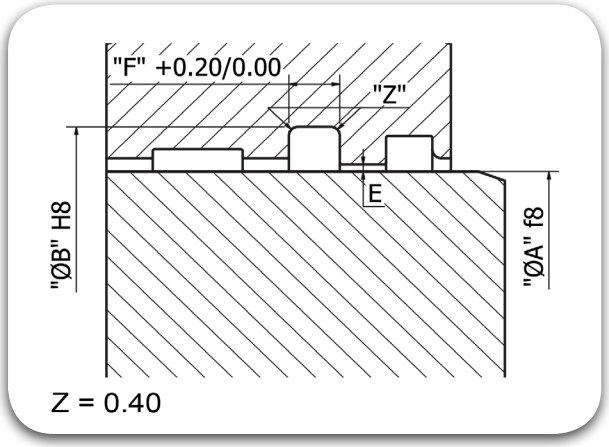

300.00

Part No	RPS 3000 3200 160					
Groove Dimension	ØA	x	ØB	x	F	
	300.00		320.00		16.00	

320.00

Part No	RPS 3200 3400 160					
Groove Dimension	ØA	x	ØB	x	F	
	320.00		340.00		16.00	

320.00

Part No	RPS 3200 3600 220					
Groove Dimension	ØA	x	ØB	x	F	
	320.00		360.00		22.00	

340.00

Part No	RPS 3400 3600 160					
Groove Dimension	ØA	x	ØB	x	F	
	340.00		360.00		16.00	

350.00

Part No	RPS 3500 3700 160					
Groove Dimension	ØA	x	ØB	x	F	
	350.00		370.00		16.00	

360.00

Part No	RPS 3600 3800 160					
Groove Dimension	ØA	x	ØB	x	F	
	360.00		380.00		16.00	

360.00

Part No	RPS 3600 3900 230					
Groove Dimension	ØA	x	ØB	x	F	
	360.00		390.00		23.00	

Rod Seals

RBF

TRIADA
TECHNOLOGIES

#SealingExcellence




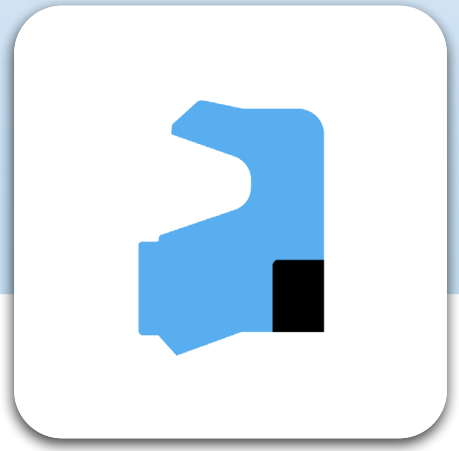

Description

Mostly used as a Buffer Seal and can take pressure surges, thanks to the Anti-Extrusion Ring. Widely preferred in Heavy Duty Cylinders as a Primary Seal, followed by a U-Cup.

Diameter Range	Ø40.00 – Ø180.00
Standard material	TRIATHANE® T479(Polyurethane) Sealing Element with a TRIAMIDE® T485(POM) Anti-Extrusion Ring
Temperature(°C)	-35° C to 110° C
Speed	≤ 0.50 m/s
Fluids	Hydraulic fluids (Mineral Oil based) depending on Seal Compounds selected.
Pressure	< 400 bar

Reciprocating | Oscillating | Rotary | Helix | Static | Single Acting | Double Acting

Material Details

Seal Material	Seal Material Code	Back-up Ring Material / Code
TRIATHANE® Polyurethane	T479	TRIAMIDE® POM (T485)

Nomenclature

Part No	RBF	1300	1455	063	T479	P
	Seal profile	Rod Dia x 10	Groove Dia x 10	Groove Width x 10	Seal Material Code	Back-up Ring Material Code

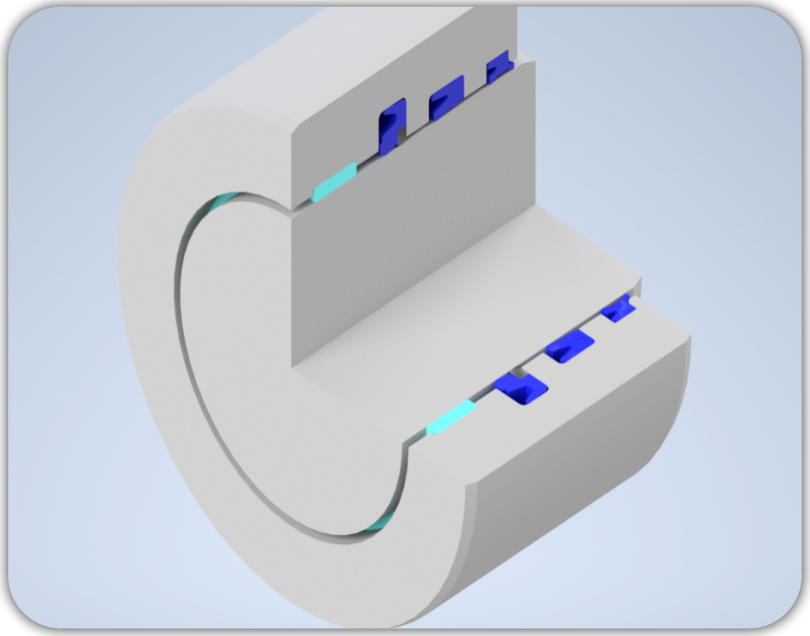

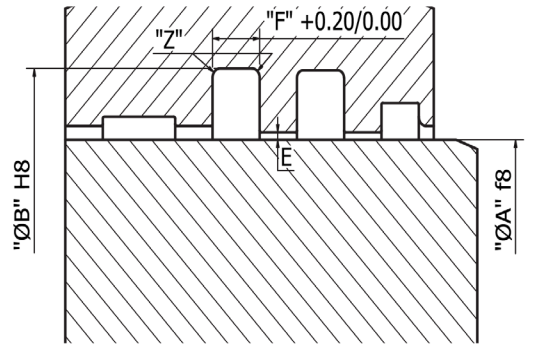

Z = 0.40

40.00

Part No	RBF 0400 0555 063					
Groove Dimension	ØA	x	ØB	x	F	
	40.00		55.50		6.30	

45.00

Part No	RBF 0450 0605 063					
Groove Dimension	ØA	x	ØB	x	F	
	45.00		60.50		6.30	

50.00

Part No	RBF 0500 0655 063					
Groove Dimension	ØA	x	ØB	x	F	
	50.00		65.50		6.30	

55.00

Part No	RBF 0550 0705 063					
Groove Dimension	ØA	x	ØB	x	F	
	55.00		70.50		6.30	

60.00

Part No	RBF 0600 0755 063					
Groove Dimension	ØA	x	ØB	x	F	
	60.00		75.50		6.30	

63.00

Part No	RBF 0630 0785 063					
Groove Dimension	ØA	x	ØB	x	F	
	63.00		78.50		6.30	

65.00

Part No	RBF 0650 0805 063					
Groove Dimension	ØA	x	ØB	x	F	
	65.00		80.50		6.30	

70.00

Part No	RBF 0700 0855 063					
Groove Dimension	ØA	x	ØB	x	F	
	70.00		85.50		6.30	

75.00

Part No	RBF 0750 0905 063					
Groove Dimension	ØA	x	ØB	x	F	
	75.00		90.50		6.30	

80.00

Part No	RBF 0800 0955 063					
Groove Dimension	ØA	x	ØB	x	F	
	80.00		95.50		6.30	

85.00

Part No	RBF 0850 1005 063					
Groove Dimension	ØA	x	ØB	x	F	
	85.00		100.50		6.30	

90.00

Part No	RBF 0900 1055 063					
Groove Dimension	ØA	x	ØB	x	F	
	90.00		105.50		6.30	

95.00

Part No	RBF 0950 1105 063					
Groove Dimension	ØA	x	ØB	x	F	
	95.00		110.50		6.30	

100.00

Part No	RBF 1000 1155 063					
Groove Dimension	ØA	x	ØB	x	F	
	100.00		115.50		6.30	

105.00

Part No	RBF 1050 1205 063					
Groove Dimension	ØA	x	ØB	x	F	
	105.00		120.50		6.30	

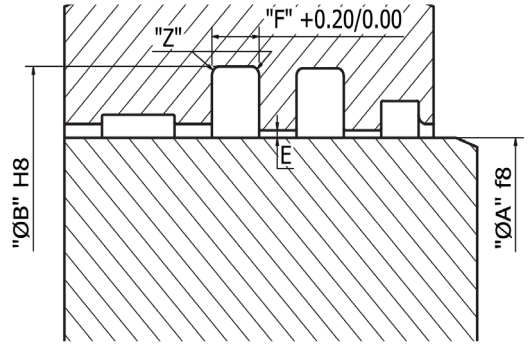

Z = 0.40

110.00

Part No	RBF 1100 1255 063					
Groove Dimension	ØA	x	ØB	x	F	
	110.00		125.50		6.30	

115.00

Part No	RBF 1150 1305 063					
Groove Dimension	ØA	x	ØB	x	F	
	115.00		130.50		6.30	

120.00

Part No	RBF 1200 1355 063					
Groove Dimension	ØA	x	ØB	x	F	
	120.00		135.50		6.30	

125.00

Part No	RBF 1250 1405 063					
Groove Dimension	ØA	x	ØB	x	F	
	125.00		140.50		6.30	

130.00

Part No	RBF 1300 1455 063					
Groove Dimension	ØA	x	ØB	x	F	
	130.00		145.50		6.30	

135.00

Part No	RBF 1350 1505 063					
Groove Dimension	ØA	x	ØB	x	F	
	135.00		150.50		6.30	

140.00

Part No	RBF 1400 1555 063					
Groove Dimension	ØA	x	ØB	x	F	
	140.00		155.50		6.30	

150.00

Part No	RBF 1500 1655 063					
Groove Dimension	ØA	x	ØB	x	F	
	150.00		165.50		6.30	

155.00

Part No	RBF 1550 1705 063					
Groove Dimension	ØA	x	ØB	x	F	
	155.00		170.50		6.30	

160.00

Part No	RBF 1600 1755 063					
Groove Dimension	ØA	x	ØB	x	F	
	160.00		175.50		6.30	

170.00

Part No	RBF 1700 1855 063					
Groove Dimension	ØA	x	ØB	x	F	
	170.00		185.50		6.30	

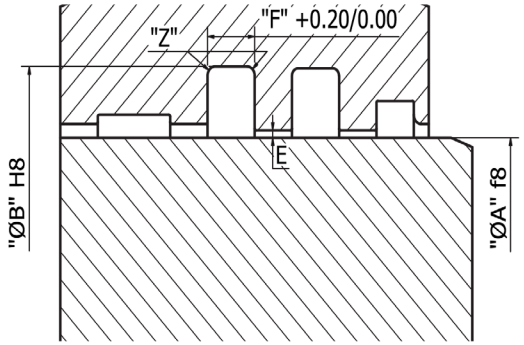

Z = 0.40

180.00

Part No	RBF 1800 1955 063
Groove Dimension	ØA x ØB x F
	180.00 x 195.50 x 6.30

Rod Seals

RSS

TRIADA
TECHNOLOGIES

#SealingExcellence


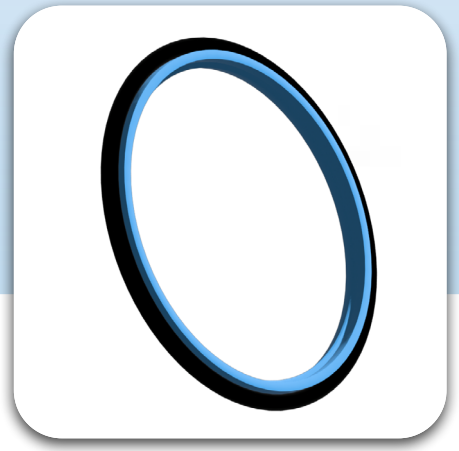

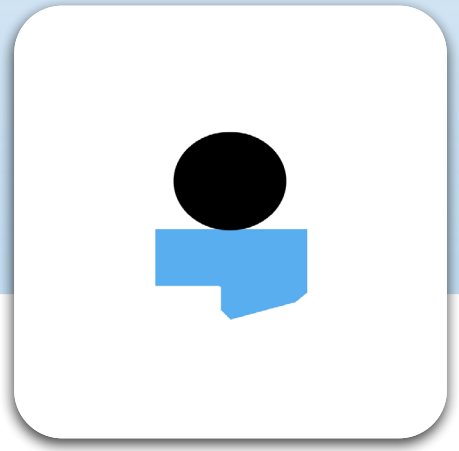

Description

The TRITILT® is composed of two elements. The dynamic seal is a ring in TRIALON® (filled PTFE) while the static seal is an O-Ring TRIAFLEX®(NBR), also acting as an energizer. Depending on the application, media, cycle speed etc., the PTFE compound is selected and the O-Ring compound is selected considering the media compatibility, temperature etc.

Diameter Range	Ø8.00 – Ø2700.00 (Larger diameters on request)
Standard material	TRIALON® T415 (Bronze Filled PTFE) with Energiser in TRIAFLEX® T571 (NBR 70 Shores) (Other Compounds available,so as to suit the Application Conditions).
Temperature(°C)	-40° C to 200° C (Based on Elastomer Material).
Speed	≤ 15.00 m/s
Fluids	Hydraulic fluids (Mineral Oil based), Water, Air etc, depending on Seal Compounds selected. depending on Seal Compound selected.
Pressure	≤ 800 bar

Reciprocating | Oscillating | Rotary | Helix | Static | Single Acting | Double Acting

Material Details

Seal Material	Seal Material Code	O-Ring Material	O-Ring Material / Code
TRIALON® Bronze Filled PTFE	T415	TRIAFLEX® NBR 70 Shore A	N (T571)
TRIALON® Carbon Filled PTFE	T417	TRIAFLEX® FKM 75 Shore A	F (T675)
		TRIAFLEX® EPDM 70 Shore A	E (T771)
		TRIAFLEX® HNBR 70 Shore A	H (T531)

Nomenclature

Part No	RSS	0160	0233	032	T415	N
	Seal profile	Rod Dia x 10	Groove Dia x 10	Groove Width x 10	Seal Material Code	O-Ring Material Code

Groove Details

Bore Diameter "A" f8			Radial Clearance "E" max		Radius "Z"	O-Ring Cross Section
Heavy duty Searies	Standard Series	Light Duty Series	0-200 Bar	200-400 Bar		
-	8.00 – 14.90	15.00 – 39.90	0.30 - 0.20	0.20 - 0.15	0.30 - 0.50	1.78
-	15.00 – 39.90	40.00 – 79.90	0.40 - 0.25	0.25 - 0.15	0.50 - 0.80	2.62
15.00 – 39.90	40.00 – 79.90	80.00 – 132.90	0.40 - 0.25	0.25 - 0.15	0.80 - 1.20	3.53
40.00 – 79.90	80.00 –132.90	133.00 – 329.90	0.50 - 0.30	0.30 - 0.20	1.20 - 1.50	5.33
80.00 – 132.90	133.00 – 329.90	330.00 – 669.90	0.50 - 0.30	0.30 - 0.20	1.50 - 2.00	7.00
133.00 – 329.90	330.00 – 669.90	670.00 – 999.90	0.60 - 0.35	0.35 - 0.25	1.50 - 2.00	7.00
330.00 – 669.90	670.00 – 999.90	-	0.70 - 0.40	0.40 - 0.30	2.00 - 3.00	8.40

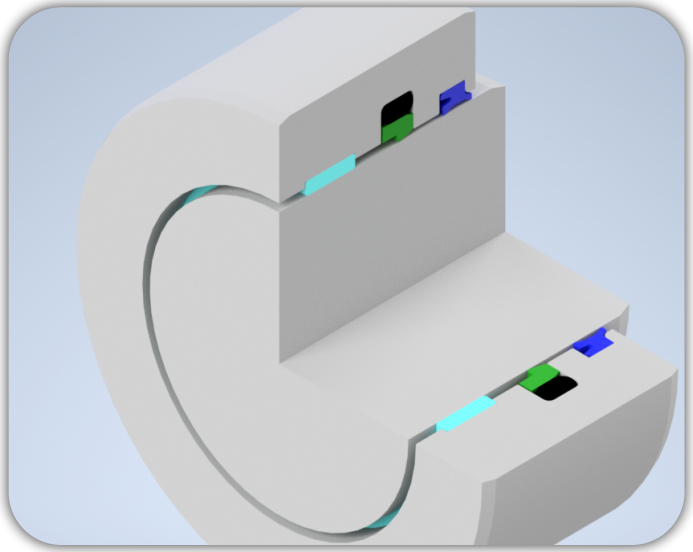

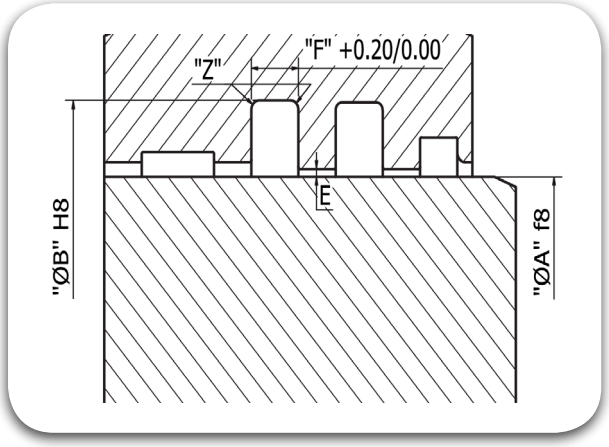

4.00

Part No	RSS 0040 0089 022					
Groove Dimension	ØA	x	ØB	x	F	
	4.00		8.90		2.20	
O-Ring Size	ID	6.07	x	C/S	1.78	

5.00

Part No	RSS 0050 0099 022					
Groove Dimension	ØA	x	ØB	x	F	
	5.00		9.90		2.20	
O-Ring Size	ID	7.65	x	C/S	1.78	

6.00

Part No	RSS 0060 0109 022					
Groove Dimension	ØA	x	ØB	x	F	
	6.00		10.90		2.20	
O-Ring Size	ID	7.65	x	C/S	1.78	

7.00

Part No	RSS 0070 0119 022					
Groove Dimension	ØA	x	ØB	x	F	
	7.00		11.90		2.20	
O-Ring Size	ID	9.25	x	C/S	1.78	

8.00

Part No	RSS 0080 0153 032					
Groove Dimension	ØA	x	ØB	x	F	
	8.00		15.30		3.20	
O-Ring Size	ID	10.77	x	C/S	2.62	

8.00

Part No	RSS 0080 0129 022					
Groove Dimension	ØA	x	ØB	x	F	
	8.00		12.90		2.20	
O-Ring Size	ID	9.25	x	C/S	1.78	

10.00

Part No	RSS 0100 0173 032					
Groove Dimension	ØA	x	ØB	x	F	
	10.00		17.30		3.20	
O-Ring Size	ID	13.94	x	C/S	2.62	

10.00

Part No	RSS 0100 0149 022					
Groove Dimension	ØA	x	ØB	x	F	
	10.00		14.90		2.20	
O-Ring Size	ID	10.82	x	C/S	1.78	

12.00

Part No	RSS 0120 0193 032					
Groove Dimension	ØA	x	ØB	x	F	
	12.00		19.30		3.20	
O-Ring Size	ID	15.54	x	C/S	2.62	

12.00

Part No	RSS 0120 0169 022					
Groove Dimension	ØA	x	ØB	x	F	
	12.00		16.90		2.20	
O-Ring Size	ID	14.00	x	C/S	1.78	

14.00

Part No	RSS 0140 0213 032					
Groove Dimension	ØA	x	ØB	x	F	
	14.00		21.30		3.20	
O-Ring Size	ID	17.12	x	C/S	2.62	

14.00

Part No	RSS 0140 0189 022					
Groove Dimension	ØA	x	ØB	x	F	
	14.00		18.90		2.20	
O-Ring Size	ID	15.60	x	C/S	1.78	

15.00

Part No	RSS 0150 0199 022					
Groove Dimension	ØA	x	ØB	x	F	
	15.00		19.90		2.20	
O-Ring Size	ID	15.60	x	C/S	1.78	

15.00

Part No	RSS 0150 0223 032							
Groove Dimension	ØA	x	ØB	x	F			
	15.00		22.30		3.20			
O-Ring Size	ID	18.72	x	C/S	2.62			

16.00

Part No	RSS 0160 0233 032							
Groove Dimension	ØA	x	ØB	x	F			
	16.00		23.30		3.20			
O-Ring Size	ID	18.72	x	C/S	2.62			

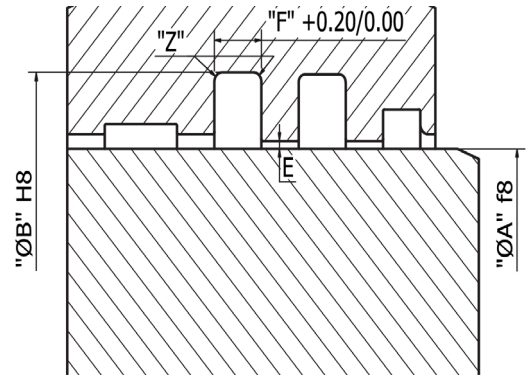

16.00

Part No	RSS 0160 0209 022							
Groove Dimension	ØA	x	ØB	x	F			
	16.00		20.90		2.20			
O-Ring Size	ID	17.17	x	C/S	1.78			

18.00

Part No	RSS 0180 0253 032							
Groove Dimension	ØA	x	ØB	x	F			
	18.00		25.30		3.20			
O-Ring Size	ID	21.89	x	C/S	2.62			

18.00

Part No	RSS 0180 0229 022							
Groove Dimension	ØA	x	ØB	x	F			
	18.00		22.90		2.20			
O-Ring Size	ID	18.77	x	C/S	1.78			

20.00

Part No	RSS 0200 0307 042							
Groove Dimension	ØA	x	ØB	x	F			
	20.00		30.70		4.20			
O-Ring Size	ID	24.99	x	C/S	3.53			

20.00

Part No	RSS 0200 0273 032							
Groove Dimension	ØA	x	ØB	x	F			
	20.00		27.30		3.20			
O-Ring Size	ID	21.89	x	C/S	2.62			

22.00

Part No	RSS 0220 0327 042							
Groove Dimension	ØA	x	ØB	x	F			
	22.00		32.70		4.20			
O-Ring Size	ID	26.57	x	C/S	3.53			

22.00

Part No	RSS 0220 0293 032							
Groove Dimension	ØA	x	ØB	x	F			
	22.00		29.30		3.20			
O-Ring Size	ID	25.07	x	C/S	2.62			

25.00

Part No	RSS 0250 0357 042							
Groove Dimension	ØA	x	ØB	x	F			
	25.00		35.70		4.20			
O-Ring Size	ID	29.74	x	C/S	3.53			

25.00

Part No	RSS 0250 0323 032							
Groove Dimension	ØA	x	ØB	x	F			
	25.00		32.30		3.20			
O-Ring Size	ID	28.24	x	C/S	2.62			

28.00

Part No	RSS 0280 0353 032							
Groove Dimension	ØA	x	ØB	x	F			
	28.00		35.30		3.20			
O-Ring Size	ID	31.42	x	C/S	2.62			

28.00

Part No	RSS 0280 0387 042							
Groove Dimension	ØA	x	ØB	x	F			
	28.00		38.70		4.20			
O-Ring Size	ID	32.92	x	C/S	3.53			

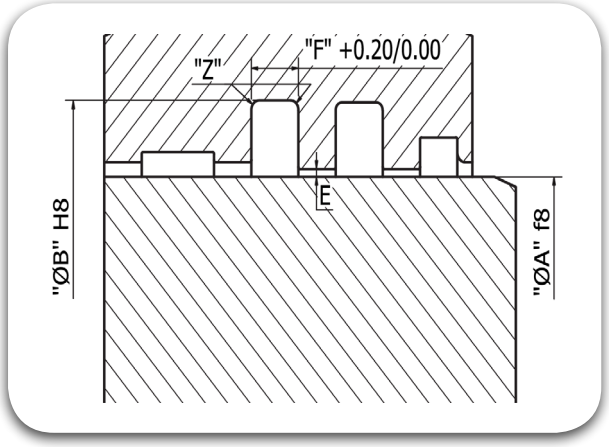

30.00

Part No	RSS 0300 0407 042						
Groove Dimension	ØA	x	ØB	x	F		
	30.00		40.70		4.20		
O-Ring Size	ID	34.52	x	C/S	3.53		

30.00

Part No	RSS 0300 0373 032						
Groove Dimension	ØA	x	ØB	x	F		
	30.00		37.30		3.20		
O-Ring Size	ID	32.99	x	C/S	2.62		

32.00

Part No	RSS 0320 0427 042						
Groove Dimension	ØA	x	ØB	x	F		
	32.00		42.70		4.20		
O-Ring Size	ID	36.09	x	C/S	3.53		

32.00

Part No	RSS 0320 0393 032						
Groove Dimension	ØA	x	ØB	x	F		
	32.00		39.30		3.20		
O-Ring Size	ID	34.59	x	C/S	2.62		

35.00

Part No	RSS 0350 0423 032						
Groove Dimension	ØA	x	ØB	x	F		
	35.00		42.30		3.20		
O-Ring Size	ID	37.77	x	C/S	2.62		

35.00

Part No	RSS 0350 0457 042						
Groove Dimension	ØA	x	ØB	x	F		
	35.00		45.70		4.20		
O-Ring Size	ID	37.69	x	C/S	3.53		

36.00

Part No	RSS 0360 0467 042						
Groove Dimension	ØA	x	ØB	x	F		
	36.00		46.70		4.20		
O-Ring Size	ID	40.87	x	C/S	3.53		

36.00

Part No	RSS 0360 0433 032						
Groove Dimension	ØA	x	ØB	x	F		
	36.00		43.30		3.20		
O-Ring Size	ID	39.34	x	C/S	2.62		

38.00

Part No	RSS 0380 0531 063						
Groove Dimension	ØA	x	ØB	x	F		
	38.00		53.10		6.30		
O-Ring Size	ID	43.82	x	C/S	5.33		

38.00

Part No	RSS 0380 0487 042						
Groove Dimension	ØA	x	ØB	x	F		
	38.00		48.70		4.20		
O-Ring Size	ID	40.87	x	C/S	3.53		

40.00

Part No	RSS 0400 0551 063						
Groove Dimension	ØA	x	ØB	x	F		
	40.00		55.10		6.30		
O-Ring Size	ID	46.99	x	C/S	5.33		

40.00

Part No	RSS 0400 0507 042						
Groove Dimension	ØA	x	ØB	x	F		
	40.00		50.70		4.20		
O-Ring Size	ID	44.04	x	C/S	3.53		

42.00

Part No	RSS 0420 0527 042						
Groove Dimension	ØA	x	ØB	x	F		
	42.00		52.70		4.20		
O-Ring Size	ID	47.22	x	C/S	3.53		

42.00

Part No	RSS 0420 0571 063						
Groove Dimension	ØA	x	ØB	x	F		
	42.00		57.10		6.30		
O-Ring Size	ID	46.99	x	C/S	5.33		

45.00

Part No	RSS 0450 0601 063						
Groove Dimension	ØA	x	ØB	x	F		
	45.00		60.10		6.30		
O-Ring Size	ID	50.17	x	C/S	5.33		

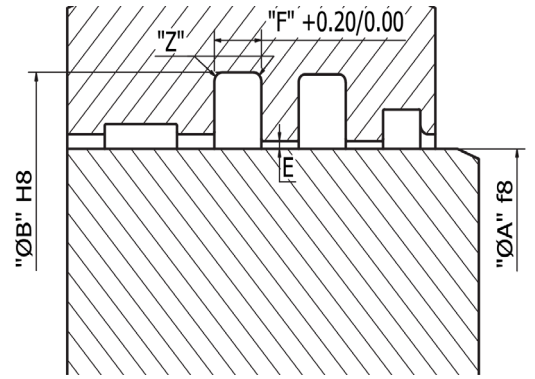

45.00

Part No	RSS 0450 0557 042						
Groove Dimension	ØA	x	ØB	x	F		
	45.00		55.70		4.20		
O-Ring Size	ID	50.39	x	C/S	3.53		

50.00

Part No	RSS 0500 0651 063						
Groove Dimension	ØA	x	ØB	x	F		
	50.00		65.10		6.30		
O-Ring Size	ID	56.52	x	C/S	5.33		

50.00

Part No	RSS 0500 0607 042						
Groove Dimension	ØA	x	ØB	x	F		
	50.00		60.70		4.20		
O-Ring Size	ID	53.57	x	C/S	3.53		

56.00

Part No	RSS 0560 0711 063						
Groove Dimension	ØA	x	ØB	x	F		
	56.00		71.10		6.30		
O-Ring Size	ID	62.87	x	C/S	5.33		

56.00

Part No	RSS 0560 0667 042						
Groove Dimension	ØA	x	ØB	x	F		
	56.00		66.70		4.20		
O-Ring Size	ID	59.92	x	C/S	3.53		

60.00

Part No	RSS 0600 0751 063						
Groove Dimension	ØA	x	ØB	x	F		
	60.00		75.10		6.30		
O-Ring Size	ID	66.04	x	C/S	5.33		

60.00

Part No	RSS 0600 0707 042						
Groove Dimension	ØA	x	ØB	x	F		
	60.00		70.70		4.20		
O-Ring Size	ID	63.09	x	C/S	3.53		

63.00

Part No	RSS 0630 0781 063						
Groove Dimension	ØA	x	ØB	x	F		
	63.00		78.10		6.30		
O-Ring Size	ID	69.22	x	C/S	5.33		

65.00

Part No	RSS 0650 0801 063						
Groove Dimension	ØA	x	ØB	x	F		
	65.00		80.10		6.30		
O-Ring Size	ID	72.39	x	C/S	5.33		

70.00

Part No	RSS 0700 0851 063						
Groove Dimension	ØA	x	ØB	x	F		
	70.00		85.10		6.30		
O-Ring Size	ID	75.57	x	C/S	5.33		

75.00

Part No	RSS 0750 0901 063						
Groove Dimension	ØA	x	ØB	x	F		
	75.00		90.10		6.30		
O-Ring Size	ID	81.92	x	C/S	5.33		

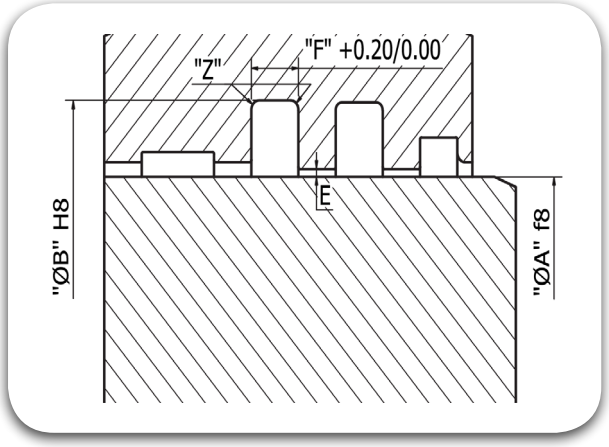

80.00

Part No	RSS 0800 0951 063						
Groove Dimension	ØA	x	ØB	x	F		
	80.00		95.10		6.30		
O-Ring Size	ID	85.09	x	C/S	5.33		

85.00

Part No	RSS 0850 1001 063						
Groove Dimension	ØA	x	ØB	x	F		
	85.00		100.10		6.30		
O-Ring Size	ID	91.44	x	C/S	5.33		

90.00

Part No	RSS 0900 1051 063						
Groove Dimension	ØA	x	ØB	x	F		
	90.00		105.10		6.30		
O-Ring Size	ID	97.79	x	C/S	5.33		

95.00

Part No	RSS 0950 1101 063						
Groove Dimension	ØA	x	ØB	x	F		
	95.00		110.10		6.30		
O-Ring Size	ID	100.97	x	C/S	5.33		

100.00

Part No	RSS 1000 1151 063						
Groove Dimension	ØA	x	ØB	x	F		
	100.00		115.10		6.30		
O-Ring Size	ID	107.32	x	C/S	5.33		

105.00

Part No	RSS 1050 1201 063						
Groove Dimension	ØA	x	ØB	x	F		
	105.00		120.10		6.30		
O-Ring Size	ID	110.49	x	C/S	5.33		

110.00

Part No	RSS 1100 1251 063						
Groove Dimension	ØA	x	ØB	x	F		
	110.00		125.10		6.30		
O-Ring Size	ID	116.84	x	C/S	5.33		

115.00

Part No	RSS 1150 1301 063						
Groove Dimension	ØA	x	ØB	x	F		
	115.00		130.10		6.30		
O-Ring Size	ID	120.02	x	C/S	5.33		

120.00

Part No	RSS 1200 1351 063						
Groove Dimension	ØA	x	ØB	x	F		
	120.00		135.10		6.30		
O-Ring Size	ID	126.37	x	C/S	5.33		

125.00

Part No	RSS 1250 1401 063						
Groove Dimension	ØA	x	ØB	x	F		
	125.00		140.10		6.30		
O-Ring Size	ID	132.72	x	C/S	5.33		

130.00

Part No	RSS 1300 1451 063						
Groove Dimension	ØA	x	ØB	x	F		
	130.00		145.10		6.30		
O-Ring Size	ID	135.89	x	C/S	5.33		

135.00

Part No	RSS 1350 1501 063						
Groove Dimension	ØA	x	ØB	x	F		
	135.00		150.10		6.30		
O-Ring Size	ID	142.24	x	C/S	5.33		

140.00

Part No	RSS 1400 1551 063						
Groove Dimension	ØA	x	ØB	x	F		
	140.00		155.10		6.30		
O-Ring Size	ID	145.42	x	C/S	5.33		

150.00

Part No	RSS 1500 1651 063
Groove Dimension	ØA 150.00 x ØB 165.10 x F 6.30
O-Ring Size	ID 158.12 x C/S 5.33

160.00

Part No	RSS 1600 1751 063
Groove Dimension	ØA 160.00 x ØB 175.10 x F 6.30
O-Ring Size	ID 164.47 x C/S 5.33

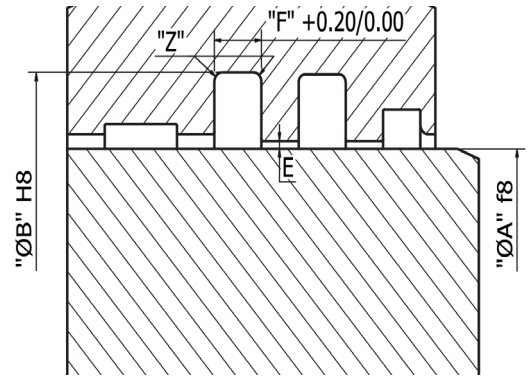

170.00

Part No	RSS 1700 1851 063
Groove Dimension	ØA 170.00 x ØB 185.10 x F 6.30
O-Ring Size	ID 177.17 x C/S 5.33

180.00

Part No	RSS 1800 1951 063
Groove Dimension	ØA 180.00 x ØB 195.10 x F 6.30
O-Ring Size	ID 183.52 x C/S 5.33

190.00

Part No	RSS 1900 2051 063
Groove Dimension	ØA 190.00 x ØB 205.10 x F 6.30
O-Ring Size	ID 196.22 x C/S 5.33

200.00

Part No	RSS 2000 2205 081
Groove Dimension	ØA 200.00 x ØB 220.50 x F 8.10
O-Ring Size	ID 202.57 x C/S 7.00

210.00

Part No	RSS 2100 2305 081
Groove Dimension	ØA 210.00 x ØB 230.50 x F 8.10
O-Ring Size	ID 215.27 x C/S 7.00

220.00

Part No	RSS 2200 2405 081
Groove Dimension	ØA 220.00 x ØB 240.50 x F 8.10
O-Ring Size	ID 227.97 x C/S 7.00

230.00

Part No	RSS 2300 2505 081
Groove Dimension	ØA 230.00 x ØB 250.50 x F 8.10
O-Ring Size	ID 240.67 x C/S 7.00

240.00

Part No	RSS 2400 2605 081
Groove Dimension	ØA 240.00 x ØB 260.50 x F 8.10
O-Ring Size	ID 253.37 x C/S 7.00

250.00

Part No	RSS 2500 2705 081
Groove Dimension	ØA 250.00 x ØB 270.50 x F 8.10
O-Ring Size	ID 253.37 x C/S 7.00

260.00

Part No	RSS 2600 2840 081
Groove Dimension	ØA 260.00 x ØB 284.00 x F 8.10
O-Ring Size	ID 266.07 x C/S 7.00

270.00

Part No	RSS 2700 2940 081
Groove Dimension	ØA 270.00 x ØB 294.00 x F 8.10
O-Ring Size	ID 278.77 x C/S 7.00

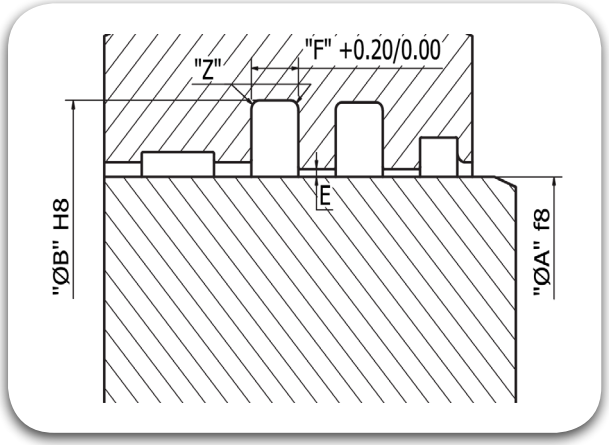

280.00

Part No	RSS 2800 3040 081					
Groove Dimension	ØA	x	ØB	x	F	
	280.00		304.00		8.10	
O-Ring Size	ID	291.47	x	C/S	7.00	

290.00

Part No	RSS 2900 3140 081					
Groove Dimension	ØA	x	ØB	x	F	
	290.00		314.00		8.10	
O-Ring Size	ID	304.17	x	C/S	7.00	

300.00

Part No	RSS 3000 3240 081					
Groove Dimension	ØA	x	ØB	x	F	
	300.00		324.00		8.10	
O-Ring Size	ID	316.87	x	C/S	7.00	

310.00

Part No	RSS 3100 3340 081					
Groove Dimension	ØA	x	ØB	x	F	
	310.00		334.00		8.10	
O-Ring Size	ID	316.87	x	C/S	7.00	

320.00

Part No	RSS 3200 3440 081					
Groove Dimension	ØA	x	ØB	x	F	
	320.00		344.00		8.10	
O-Ring Size	ID	329.57	x	C/S	7.00	

330.00

Part No	RSS 3300 3540 081					
Groove Dimension	ØA	x	ØB	x	F	
	330.00		354.00		8.10	
O-Ring Size	ID	342.27	x	C/S	7.00	

340.00

Part No	RSS 3400 3640 081					
Groove Dimension	ØA	x	ØB	x	F	
	340.00		364.00		8.10	
O-Ring Size	ID	354.97	x	C/S	7.00	

350.00

Part No	RSS 3500 3740 081					
Groove Dimension	ØA	x	ØB	x	F	
	350.00		374.00		8.10	
O-Ring Size	ID	367.67	x	C/S	7.00	

360.00

Part No	RSS 3600 3840 081					
Groove Dimension	ØA	x	ØB	x	F	
	360.00		384.00		8.10	
O-Ring Size	ID	367.67	x	C/S	7.00	

370.00

Part No	RSS 3700 3940 081					
Groove Dimension	ØA	x	ØB	x	F	
	370.00		394.00		8.10	
O-Ring Size	ID	380.37	x	C/S	7.00	

380.00

Part No	RSS 3800 4040 081					
Groove Dimension	ØA	x	ØB	x	F	
	380.00		404.00		8.10	
O-Ring Size	ID	393.07	x	C/S	7.00	

390.00

Part No	RSS 3900 4140 081					
Groove Dimension	ØA	x	ØB	x	F	
	390.00		414.00		8.10	
O-Ring Size	ID	405.26	x	C/S	7.00	

400.00

Part No	RSS 4000 4240 081					
Groove Dimension	ØA	x	ØB	x	F	
	400.00		424.00		8.10	
O-Ring Size	ID	405.26	x	C/S	7.00	

410.00

Part No	RSS 4100 4340 081
Groove Dimension	ØA 410.00 x ØB 434.00 x F 8.10
O-Ring Size	ID 417.96 x C/S 7.00

420.00

Part No	RSS 4200 4440 081
Groove Dimension	ØA 420.00 x ØB 444.00 x F 8.10
O-Ring Size	ID 430.66 x C/S 7.00

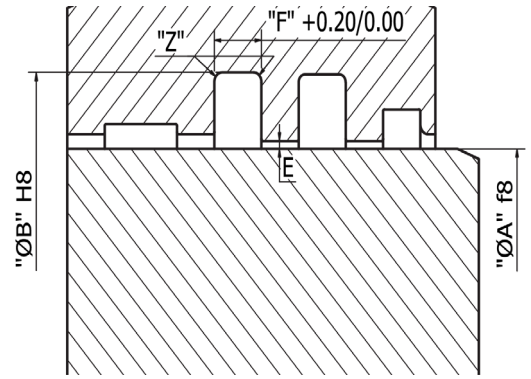

430.00

Part No	RSS 4300 4540 081
Groove Dimension	ØA 430.00 x ØB 454.00 x F 8.10
O-Ring Size	ID 443.36 x C/S 7.00

440.00

Part No	RSS 4400 4640 081
Groove Dimension	ØA 440.00 x ØB 464.00 x F 8.10
O-Ring Size	ID 456.06 x C/S 7.00

450.00

Part No	RSS 4500 4740 081
Groove Dimension	ØA 450.00 x ØB 474.00 x F 8.10
O-Ring Size	ID 456.06 x C/S 7.00

460.00

Part No	RSS 4600 4840 081
Groove Dimension	ØA 460.00 x ØB 484.00 x F 8.10
O-Ring Size	ID 468.76 x C/S 7.00

470.00

Part No	RSS 4700 4940 081
Groove Dimension	ØA 470.00 x ØB 494.00 x F 8.10
O-Ring Size	ID 481.46 x C/S 7.00

480.00

Part No	RSS 4800 5040 081
Groove Dimension	ØA 480.00 x ØB 504.00 x F 8.10
O-Ring Size	ID 494.16 x C/S 7.00

490.00

Part No	RSS 4900 5140 081
Groove Dimension	ØA 490.00 x ØB 514.00 x F 8.10
O-Ring Size	ID 506.86 x C/S 7.00

500.00

Part No	RSS 5000 5240 081
Groove Dimension	ØA 500.00 x ØB 524.00 x F 8.10
O-Ring Size	ID 506.86 x C/S 7.00

510.00

Part No	RSS 5100 5340 081
Groove Dimension	ØA 510.00 x ØB 534.00 x F 8.10
O-Ring Size	ID 506.86 x C/S 7.00

520.00

Part No	RSS 5200 5440 081
Groove Dimension	ØA 520.00 x ØB 544.00 x F 8.10
O-Ring Size	ID 532.26 x C/S 7.00

530.00

Part No	RSS 5300 5540 081
Groove Dimension	ØA 530.00 x ØB 554.00 x F 8.10
O-Ring Size	ID 532.26 x C/S 7.00

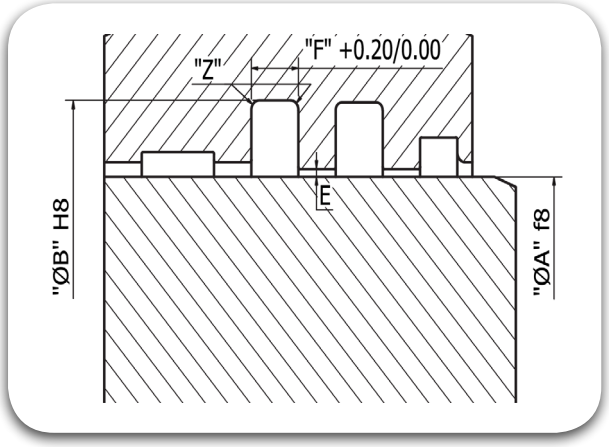

540.00

Part No	RSS 5400 5640 081					
Groove Dimension	ØA	x	ØB	x	F	
	540.00		564.00		8.10	
O-Ring Size	ID	557.66	x	C/S	7.00	

550.00

Part No	RSS 5500 5740 081					
Groove Dimension	ØA	x	ØB	x	F	
	550.00		574.00		8.10	
O-Ring Size	ID	557.66	x	C/S	7.00	

560.00

Part No	RSS 5600 5840 081					
Groove Dimension	ØA	x	ØB	x	F	
	560.00		584.00		8.10	
O-Ring Size	ID	557.66	x	C/S	7.00	

570.00

Part No	RSS 5700 5940 081					
Groove Dimension	ØA	x	ØB	x	F	
	570.00		594.00		8.10	
O-Ring Size	ID	582.68	x	C/S	7.00	

580.00

Part No	RSS 5800 6040 081					
Groove Dimension	ØA	x	ØB	x	F	
	580.00		604.00		8.10	
O-Ring Size	ID	582.68	x	C/S	7.00	

590.00

Part No	RSS 5900 6140 081					
Groove Dimension	ØA	x	ØB	x	F	
	590.00		614.00		8.10	
O-Ring Size	ID	608.08	x	C/S	7.00	

600.00

Part No	RSS 6000 6240 081					
Groove Dimension	ØA	x	ØB	x	F	
	600.00		624.00		8.10	
O-Ring Size	ID	608.08	x	C/S	7.00	

610.00

Part No	RSS 6100 6340 081					
Groove Dimension	ØA	x	ØB	x	F	
	610.00		634.00		8.10	
O-Ring Size	ID	608.08	x	C/S	7.00	

620.00

Part No	RSS 6200 6440 081					
Groove Dimension	ØA	x	ØB	x	F	
	620.00		644.00		8.10	
O-Ring Size	ID	633.48	x	C/S	7.00	

630.00

Part No	RSS 6300 6540 081					
Groove Dimension	ØA	x	ØB	x	F	
	630.00		654.00		8.10	
O-Ring Size	ID	633.48	x	C/S	7.00	

640.00

Part No	RSS 6400 6640 081					
Groove Dimension	ØA	x	ØB	x	F	
	640.00		664.00		8.10	
O-Ring Size	ID	658.88	x	C/S	7.00	

650.00

Part No	RSS 6500 6773 095					
Groove Dimension	ØA	x	ØB	x	F	
	650.00		667.30		9.50	
O-Ring Size	ID	665.00	x	C/S	8.40	

660.00

Part No	RSS 6600 6873 095					
Groove Dimension	ØA	x	ØB	x	F	
	660.00		687.30		9.50	
O-Ring Size	ID	675.00	x	C/S	8.40	

670.00

Part No	RSS 6700 6973 095
Groove Dimension	ØA 670.00 x ØB 397.30 x F 9.50
O-Ring Size	ID 685.00 x C/S 8.40

680.00

Part No	RSS 6800 7073 095
Groove Dimension	ØA 680.00 x ØB 707.30 x F 9.50
O-Ring Size	ID 695.00 x C/S 8.40

690.00

Part No	RSS 6900 7173 095
Groove Dimension	ØA 690.00 x ØB 717.30 x F 9.50
O-Ring Size	ID 705.00 x C/S 8.40

700.00

Part No	RSS 7000 7273 095
Groove Dimension	ØA 700.00 x ØB 727.30 x F 9.50
O-Ring Size	ID 715.00 x C/S 8.40

710.00

Part No	RSS 7100 7373 095
Groove Dimension	ØA 710.00 x ØB 737.30 x F 9.50
O-Ring Size	ID 725.00 x C/S 8.40

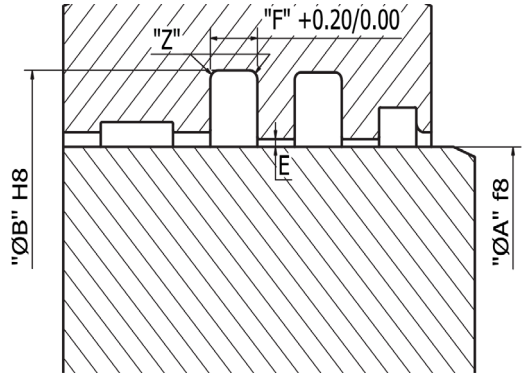

Rod Seals

RTD

TRIADA
TECHNOLOGIES

#SealingExcellence


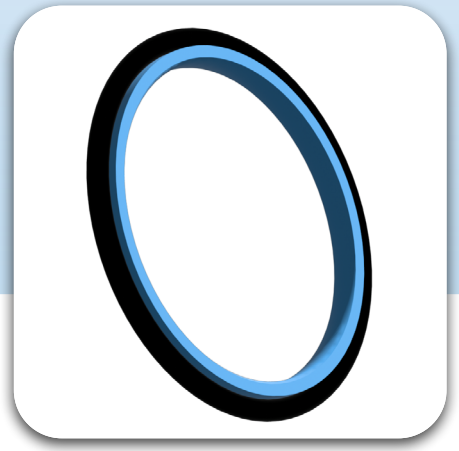

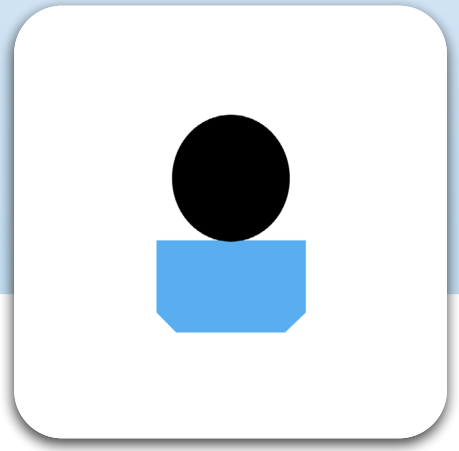

Description

TRIGLIDE® is a bidirectional seal and composed of two elements.The dynamic seal is a ring in TRIALON® (filled PTFE) while the static seal is an O-Ring TRIAFLEX® (NBR) also acting as energizer. Depending on the application, media, cycle speed etc., the PTFE compound is selected and the O-Ring compound is selected considering the media compatibility, temperature etc.

Diameter Range	Ø8.00 – Ø2700.00
Standard material	TRIALON® T415(Bronze Filled PTFE) with Energiser in TRIAFLEX® T571(NBR 70 Shores) (Other Compounds available, so as to suit the Application Conditions).
Temperature(°C)	-40° C to 200° C (Based on Elastomer Material).
Speed	≤ 15.00 m/s
Fluids	Hydraulic fluids (Mineral Oil based), Water, Air etc, depending on Seal Compounds selected. depending on Seal Compound selected.
Pressure	≤ 800 bar

Reciprocating · Oscillating · Rotary · Helix · Static · Single Acting · Double Acting

Material Details

Seal Material	Seal Material Code	O-Ring Material	O-Ring Material / Code
TRIALON® Bronze Filled PTFE	T415	TRIAFLEX® NBR 70 Shore A	N (T571)
TRIALON® Carbon Filled PTFE	T417	TRIAFLEX® FKM 75 Shore A	F (T675)
		TRIAFLEX® EPDM 70 Shore A	E (T771)
		TRIAFLEX® HNBR 70 Shore A	H (T531)

Nomenclature

Part No	RTD	0160	0233	032	T415	N
	Seal profile	Rod Dia x 10	Groove Dia x 10	Groove Width x 10	Seal Material Code	O-Ring Material Code

Groove Details

Bore Diameter "A" f8			Radial Clearance "E" max		Radius "Z"	O-Ring Cross Section
Heavy duty Searies	Standard Series	Light Duty Series	0-200 Bar	200-400 Bar		
-	8.00 – 14.90	15.00 – 39.90	0.30 - 0.20	0.20 - 0.15	0.30 - 0.50	1.78
-	15.00 – 39.90	40.00 – 79.90	0.40 - 0.25	0.25 - 0.15	0.50 - 0.80	2.62
15.00 – 39.90	40.00 – 79.90	80.00 – 132.90	0.40 - 0.25	0.25 - 0.15	0.80 - 1.20	3.53
40.00 – 79.90	80.00 –132.90	133.00 – 329.90	0.50 - 0.30	0.30 - 0.20	1.20 - 1.50	5.33
80.00 – 132.90	133.00 – 329.90	330.00 – 669.90	0.50 - 0.30	0.30 - 0.20	1.50 - 2.00	7.00
133.00 – 329.90	330.00 – 669.90	670.00 – 999.90	0.60 - 0.35	0.35 - 0.25	1.50 - 2.00	7.00
330.00 – 669.90	670.00 – 999.90	-	0.70 - 0.40	0.40 - 0.30	2.00 - 3.00	8.40

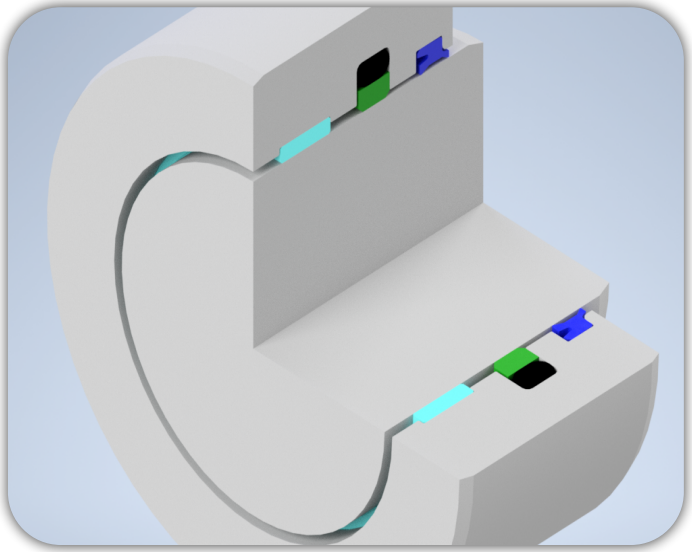

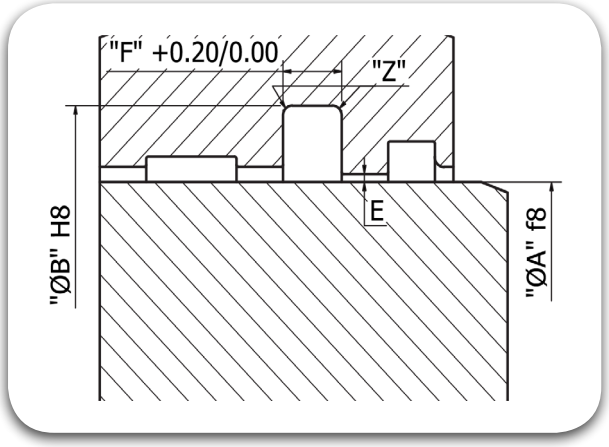

3.00						
Part No	RTD 0030 0079 022					
Groove Dimension	ØA	x	ØB	x	F	
	3.00		7.90		2.20	
O-Ring Size	ID	4.47	x	C/S	1.78	

4.00						
Part No	RTD 0040 0089 022					
Groove Dimension	ØA	x	ØB	x	F	
	4.00		8.90		2.20	
O-Ring Size	ID	5.60	x	C/S	1.80	

5.00						
Part No	RTD 0050 0099 022					
Groove Dimension	ØA	x	ØB	x	F	
	5.00		9.90		2.20	
O-Ring Size	ID	6.70	x	C/S	1.80	

6.00						
Part No	RTD 0060 0109 022					
Groove Dimension	ØA	x	ØB	x	F	
	6.00		10.90		2.20	
O-Ring Size	ID	7.65	x	C/S	1.78	

7.00						
Part No	RTD 0070 0119 022					
Groove Dimension	ØA	x	ØB	x	F	
	7.00		11.90		2.20	
O-Ring Size	ID	8.75	x	C/S	1.80	

8.00						
Part No	RTD 0080 0129 022					
Groove Dimension	ØA	x	ØB	x	F	
	8.00		12.90		2.20	
O-Ring Size	ID	9.50	x	C/S	1.80	

8.00						
Part No	RTD 0080 0153 032					
Groove Dimension	ØA	x	ØB	x	F	
	8.00		15.30		3.20	
O-Ring Size	ID	10.77	x	C/S	2.62	

10.00						
Part No	RTD 0100 0149 022					
Groove Dimension	ØA	x	ØB	x	F	
	10.00		14.90		2.20	
O-Ring Size	ID	11.80	x	C/S	1.80	

10.00						
Part No	RTD 0100 0173 032					
Groove Dimension	ØA	x	ØB	x	F	
	10.00		17.30		3.20	
O-Ring Size	ID	12.37	x	C/S	2.62	

12.00						
Part No	RTD 0120 0169 022					
Groove Dimension	ØA	x	ØB	x	F	
	12.00		16.90		2.20	
O-Ring Size	ID	14.00	x	C/S	1.78	

12.00						
Part No	RTD 0120 0193 032					
Groove Dimension	ØA	x	ØB	x	F	
	12.00		19.30		3.20	
O-Ring Size	ID	13.94	x	C/S	2.62	

14.00						
Part No	RTD 0140 0189 022					
Groove Dimension	ØA	x	ØB	x	F	
	14.00		18.90		2.20	
O-Ring Size	ID	15.60	x	C/S	1.78	

14.00						
Part No	RTD 0140 0213 032					
Groove Dimension	ØA	x	ØB	x	F	
	14.00		21.30		3.20	
O-Ring Size	ID	17.12	x	C/S	2.62	

15.00

Part No	RTD 0150 0199 022					
Groove Dimension	ØA	x	ØB	x	F	
	15.00		19.90		2.20	
O-Ring Size	ID	17.17	x	C/S	1.78	

15.00

Part No	RTD 0150 0223 032					
Groove Dimension	ØA	x	ØB	x	F	
	15.00		22.30		3.20	
O-Ring Size	ID	17.12	x	C/S	2.62	

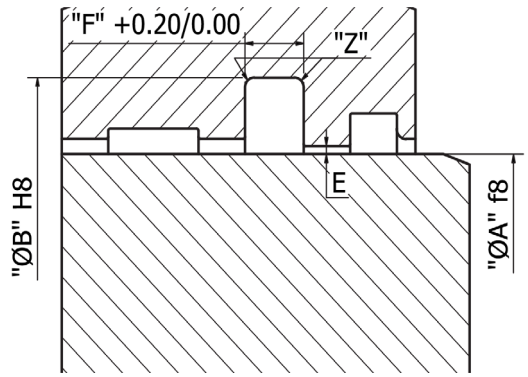

16.00

Part No	RTD 0160 0209 022					
Groove Dimension	ØA	x	ØB	x	F	
	16.00		20.90		2.20	
O-Ring Size	ID	17.17	x	C/S	1.78	

16.00

Part No	RTD 0160 0233 032					
Groove Dimension	ØA	x	ØB	x	F	
	16.00		23.30		3.20	
O-Ring Size	ID	18.72	x	C/S	2.62	

18.00

Part No	RTD 0180 0229 022					
Groove Dimension	ØA	x	ØB	x	F	
	18.00		22.90		2.20	
O-Ring Size	ID	20.35	x	C/S	1.78	

18.00

Part No	RTD 0180 0253 032					
Groove Dimension	ØA	x	ØB	x	F	
	18.00		25.30		3.20	
O-Ring Size	ID	20.29	x	C/S	2.62	

19.00

Part No	RTD 0190 0297 042					
Groove Dimension	ØA	x	ØB	x	F	
	19.00		29.70		4.20	
O-Ring Size	ID	23.39	x	C/S	3.53	

20.00

Part No	RTD 0200 0273 032					
Groove Dimension	ØA	x	ØB	x	F	
	20.00		27.30		3.20	
O-Ring Size	ID	21.89	x	C/S	2.62	

20.00

Part No	RTD 0200 0307 042					
Groove Dimension	ØA	x	ØB	x	F	
	20.00		30.70		4.20	
O-Ring Size	ID	25.00	x	C/S	3.53	

22.00

Part No	RTD 0220 0293 032					
Groove Dimension	ØA	x	ØB	x	F	
	22.00		29.30		3.20	
O-Ring Size	ID	25.07	x	C/S	2.62	

22.00

Part No	RTD 0220 0327 042					
Groove Dimension	ØA	x	ØB	x	F	
	22.00		32.70		4.20	
O-Ring Size	ID	26.57	x	C/S	3.53	

24.00

Part No	RTD 0240 0313 032					
Groove Dimension	ØA	x	ØB	x	F	
	24.00		31.30		3.20	
O-Ring Size	ID	26.64	x	C/S	2.62	

25.00

Part No	RTD 0250 0323 032					
Groove Dimension	ØA	x	ØB	x	F	
	25.00		32.30		3.20	
O-Ring Size	ID	28.24	x	C/S	2.62	

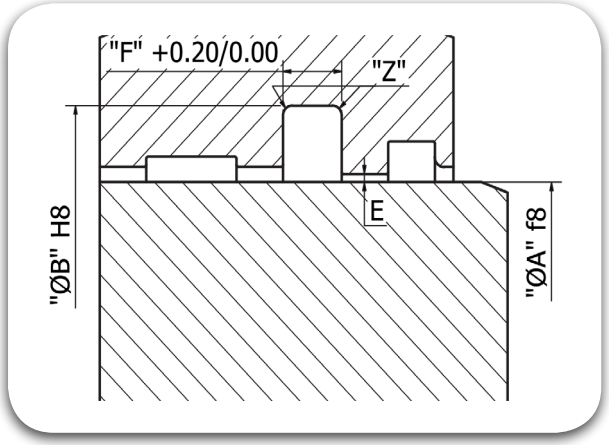

25.00

Part No	RTD 0250 0357 042		
Groove Dimension	ØA 25.00	ØB 35.70	F 4.20
O-Ring Size	ID 29.74	C/S 3.53	

25.40

Part No	RTD 0254 0327 032		
Groove Dimension	ØA 25.40	ØB 32.70	F 3.20
O-Ring Size	ID 28.24	C/S 2.62	

25.40

Part No	RTD 0254 0361 042		
Groove Dimension	ØA 25.40	ØB 36.10	F 4.20
O-Ring Size	ID 29.74	C/S 3.53	

26.00

Part No	RTD 0260 0330 032		
Groove Dimension	ØA 26.00	ØB 33.30	F 3.20
O-Ring Size	ID 28.24	C/S 2.62	

26.00

Part No	RTD 0260 0367 042		
Groove Dimension	ØA 26.00	ØB 36.70	F 4.20
O-Ring Size	ID 29.74	C/S 3.53	

27.00

Part No	RTD 0270 0343 032		
Groove Dimension	ØA 27.00	ØB 34.30	F 3.20
O-Ring Size	ID 29.82	C/S 2.62	

28.00

Part No	RTD 0280 0353 032		
Groove Dimension	ØA 28.00	ØB 35.30	F 3.20
O-Ring Size	ID 29.82	C/S 2.62	

28.00

Part No	RTD 0280 0387 042		
Groove Dimension	ØA 28.00	ØB 38.70	F 4.20
O-Ring Size	ID 32.92	C/S 3.53	

28.58

Part No	RTD 0285 0358 032		
Groove Dimension	ØA 28.58	ØB 35.88	F 3.20
O-Ring Size	ID 31.42	C/S 2.62	

29.00

Part No	RTD 0290 0363 032		
Groove Dimension	ØA 29.00	ØB 36.30	F 3.20
O-Ring Size	ID 31.42	C/S 2.62	

30.00

Part No	RTD 0300 0373 032		
Groove Dimension	ØA 30.00	ØB 37.30	F 3.20
O-Ring Size	ID 32.99	C/S 2.62	

30.00

Part No	RTD 0300 0407 042		
Groove Dimension	ØA 30.00	ØB 40.70	F 4.20
O-Ring Size	ID 34.52	C/S 3.53	

32.00

Part No	RTD 0320 0393 032		
Groove Dimension	ØA 32.00	ØB 39.30	F 3.20
O-Ring Size	ID 34.59	C/S 2.62	

32.00

Part No	RTD 0320 0427 042					
Groove Dimension	ØA	x	ØB	x	F	
	32.00		42.70		4.20	
O-Ring Size	ID	36.09	x	C/S	3.53	

35.00

Part No	RTD 0350 0423 032					
Groove Dimension	ØA	x	ØB	x	F	
	35.00		42.30		3.20	
O-Ring Size	ID	37.77	x	C/S	2.62	

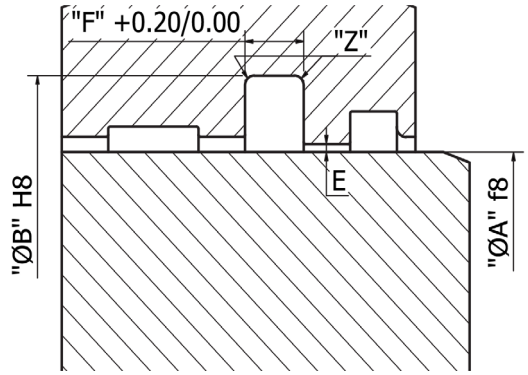

35.00

Part No	RTD 0350 0457 042					
Groove Dimension	ØA	x	ØB	x	F	
	35.00		45.70		4.20	
O-Ring Size	ID	37.69	x	C/S	3.53	

36.00

Part No	RTD 0360 0433 032					
Groove Dimension	ØA	x	ØB	x	F	
	36.00		43.30		3.20	
O-Ring Size	ID	39.34	x	C/S	2.62	

36.00

Part No	RTD 0360 0467 042					
Groove Dimension	ØA	x	ØB	x	F	
	36.00		46.70		4.20	
O-Ring Size	ID	40.87	x	C/S	3.53	

38.00

Part No	RTD 0380 0487 042					
Groove Dimension	ØA	x	ØB	x	F	
	38.00		48.70		4.20	
O-Ring Size	ID	40.87	x	C/S	3.53	

38.00

Part No	RTD 0380 0531 063					
Groove Dimension	ØA	x	ØB	x	F	
	38.00		53.10		6.30	
O-Ring Size	ID	43.82	x	C/S	5.33	

39.00

Part No	RTD 0390 0497 042					
Groove Dimension	ØA	x	ØB	x	F	
	39.00		49.70		4.20	
O-Ring Size	ID	44.04	x	C/S	3.53	

40.00

Part No	RTD 0400 0507 042					
Groove Dimension	ØA	x	ØB	x	F	
	40.00		50.70		4.20	
O-Ring Size	ID	44.04	x	C/S	3.53	

40.00

Part No	RTD 0400 0551 063					
Groove Dimension	ØA	x	ØB	x	F	
	40.00		55.10		6.30	
O-Ring Size	ID	43.82	x	C/S	5.33	

42.00

Part No	RTD 0420 0527 042					
Groove Dimension	ØA	x	ØB	x	F	
	42.00		52.70		4.20	
O-Ring Size	ID	47.22	x	C/S	3.53	

42.00

Part No	RTD 0420 0571 063					
Groove Dimension	ØA	x	ØB	x	F	
	42.00		57.10		6.30	
O-Ring Size	ID	46.99	x	C/S	5.33	

44.00

Part No	RTD 0440 0547 042					
Groove Dimension	ØA	x	ØB	x	F	
	44.00		54.70		4.20	
O-Ring Size	ID	47.22	x	C/S	3.53	

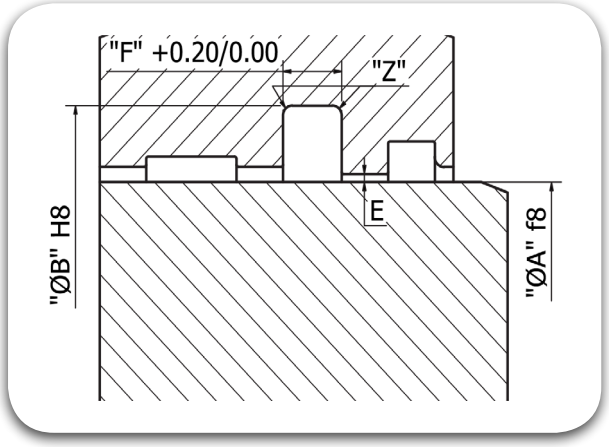

44.45

Part No	RTD 0445 0595 063		
Groove Dimension	ØA 44.45	ØB 59.55	F 6.30
O-Ring Size	ID 50.17	C/S 5.33	

45.00

Part No	RTD 0450 0557 042		
Groove Dimension	ØA 45.00	ØB 55.70	F 4.20
O-Ring Size	ID 50.39	C/S 3.53	

45.00

Part No	RTD 0450 0601 063		
Groove Dimension	ØA 45.00	ØB 60.10	F 6.30
O-Ring Size	ID 50.17	C/S 5.33	

48.00

Part No	RTD 0480 0587 042		
Groove Dimension	ØA 48.00	ØB 58.70	F 4.20
O-Ring Size	ID 51.50	C/S 3.55	

48.00

Part No	RTD 0480 0631 063		
Groove Dimension	ØA 48.00	ØB 63.10	F 6.30
O-Ring Size	ID 53.34	C/S 5.33	

50.00

Part No	RTD 0500 0607 042		
Groove Dimension	ØA 50.00	ØB 60.70	F 4.20
O-Ring Size	ID 53.57	C/S 3.53	

50.00

Part No	RTD 0500 0651 063		
Groove Dimension	ØA 50.00	ØB 65.10	F 6.30
O-Ring Size	ID 56.52	C/S 5.33	

50.80

Part No	RTD 0508 0615 042		
Groove Dimension	ØA 50.80	ØB 61.50	F 4.20
O-Ring Size	ID 53.57	C/S 3.53	

50.80

Part No	RTD 0508 0659 063		
Groove Dimension	ØA 50.80	ØB 65.90	F 6.30
O-Ring Size	ID 56.52	C/S 5.33	

52.00

Part No	RTD 0520 0627 042		
Groove Dimension	ØA 52.00	ØB 62.70	F 4.20
O-Ring Size	ID 56.74	C/S 3.53	

52.00

Part No	RTD 0520 0671 063		
Groove Dimension	ØA 52.00	ØB 67.10	F 6.30
O-Ring Size	ID 56.52	C/S 5.33	

54.00

Part No	RTD 0540 0691 063		
Groove Dimension	ØA 54.00	ØB 69.10	F 6.30
O-Ring Size	ID 59.69	C/S 5.33	

55.00

Part No	RTD 0550 0657 042		
Groove Dimension	ØA 55.00	ØB 65.70	F 4.20
O-Ring Size	ID 59.92	C/S 3.53	

55.00

Part No	RTD 0550 0701 063				
Groove Dimension	ØA 55.00	x	ØB 70.10	x	F 6.30
O-Ring Size	ID 59.69	x	C/S 5.33		

56.00

Part No	RTD 0560 0667 042				
Groove Dimension	ØA 56.00	x	ØB 66.70	x	F 4.20
O-Ring Size	ID 59.92	x	C/S 3.53		

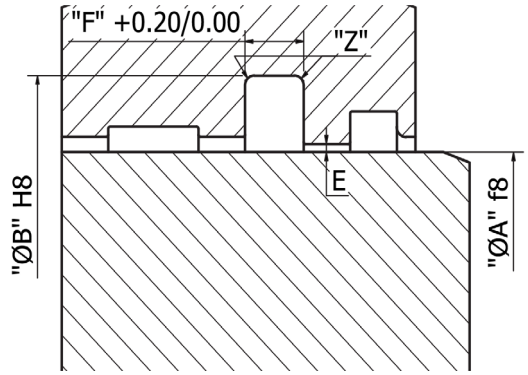

56.00

Part No	RTD 0560 0711 063				
Groove Dimension	ØA 56.00	x	ØB 71.10	x	F 6.30
O-Ring Size	ID 62.87	x	C/S 5.33		

58.00

Part No	RTD 0580 0731 063				
Groove Dimension	ØA 58.00	x	ØB 73.10	x	F 6.30
O-Ring Size	ID 62.87	x	C/S 5.33		

60.00

Part No	RTD 0600 0707 042				
Groove Dimension	ØA 60.00	x	ØB 70.70	x	F 4.20
O-Ring Size	ID 63.09	x	C/S 3.53		

60.00

Part No	RTD 0600 0751 063				
Groove Dimension	ØA 60.00	x	ØB 75.10	x	F 6.30
O-Ring Size	ID 66.04	x	C/S 5.33		

63.00

Part No	RTD 0630 0737 042				
Groove Dimension	ØA 63.00	x	ØB 73.70	x	F 4.20
O-Ring Size	ID 66.27	x	C/S 3.53		

63.00

Part No	RTD 0630 0781 063				
Groove Dimension	ØA 63.00	x	ØB 78.10	x	F 6.30
O-Ring Size	ID 69.22	x	C/S 5.33		

65.00

Part No	RTD 0650 0801 063				
Groove Dimension	ØA 65.00	x	ØB 80.10	x	F 6.30
O-Ring Size	ID 69.22	x	C/S 5.33		

67.00

Part No	RTD 0670 0777 042				
Groove Dimension	ØA 67.00	x	ØB 77.70	x	F 4.20
O-Ring Size	ID 72.62	x	C/S 3.53		

70.00

Part No	RTD 0700 0807 042				
Groove Dimension	ØA 70.00	x	ØB 80.70	x	F 4.20
O-Ring Size	ID 75.79	x	C/S 3.53		

70.00

Part No	RTD 0700 0851 063				
Groove Dimension	ØA 70.00	x	ØB 85.10	x	F 6.30
O-Ring Size	ID 75.57	x	C/S 5.33		

72.00

Part No	RTD 0720 0827 042				
Groove Dimension	ØA 72.00	x	ØB 82.70	x	F 4.20
O-Ring Size	ID 75.79	x	C/S 3.53		

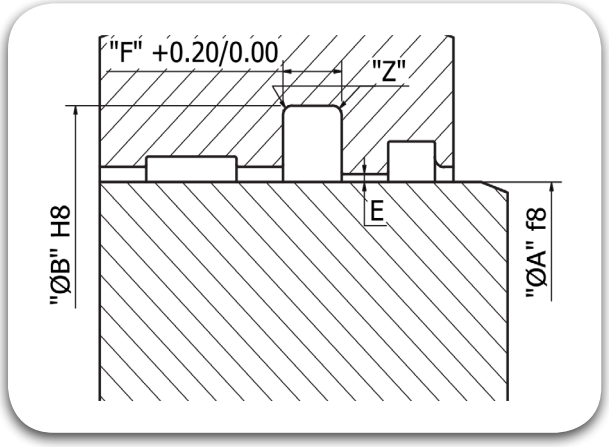

75.00

Part No	RTD 0750 0857 042		
Groove Dimension	ØA 75.00	ØB 85.70	F 4.20
O-Ring Size	ID 78.97	C/S 3.53	

75.00

Part No	RTD 0750 0901 063		
Groove Dimension	ØA 75.00	ØB 90.10	F 6.30
O-Ring Size	ID 81.92	C/S 5.33	

80.00

Part No	RTD 0800 0907 042		
Groove Dimension	ØA 80.00	ØB 90.70	F 4.20
O-Ring Size	ID 85.32	C/S 3.53	

80.00

Part No	RTD 0800 0951 063		
Groove Dimension	ØA 80.00	ØB 95.10	F 6.30
O-Ring Size	ID 85.09	C/S 5.33	

83.00

Part No	RTD 0830 0937 042		
Groove Dimension	ØA 83.00	ØB 93.70	F 4.20
O-Ring Size	ID 88.49	C/S 3.53	

85.00

Part No	RTD 0850 1001 063		
Groove Dimension	ØA 85.00	ØB 100.10	F 6.30
O-Ring Size	ID 91.44	C/S 5.33	

86.00

Part No	RTD 0860 0967 042		
Groove Dimension	ØA 86.00	ØB 96.70	F 4.20
O-Ring Size	ID 91.67	C/S 3.53	

90.00

Part No	RTD 0900 1007 042		
Groove Dimension	ØA 90.00	ØB 100.70	F 4.20
O-Ring Size	ID 94.84	C/S 3.53	

90.00

Part No	RTD 0900 1051 063		
Groove Dimension	ØA 90.00	ØB 105.10	F 6.30
O-Ring Size	ID 94.62	C/S 5.33	

92.00

Part No	RTD 0920 1027 042		
Groove Dimension	ØA 92.00	ØB 102.70	F 4.20
O-Ring Size	ID 98.02	C/S 3.53	

95.00

Part No	RTD 0950 1057 042		
Groove Dimension	ØA 95.00	ØB 105.70	F 4.20
O-Ring Size	ID 101.19	C/S 3.53	

95.00

Part No	RTD 0950 1101 063		
Groove Dimension	ØA 95.00	ØB 110.10	F 6.30
O-Ring Size	ID 100.97	C/S 5.33	

100.00

Part No	RTD 1000 1107 042		
Groove Dimension	ØA 100.00	ØB 110.70	F 4.20
O-Ring Size	ID 104.37	C/S 3.53	

100.00

Part No	RTD 1000 1151 063					
Groove Dimension	ØA	x	ØB	x	F	
	100.00		115.10		6.30	
O-Ring Size	ID	107.32	x	C/S	5.33	

101.60

Part No	RTD 1016 1123 042					
Groove Dimension	ØA	x	ØB	x	F	
	101.60		112.30		4.20	
O-Ring Size	ID	107.54	x	C/S	3.53	

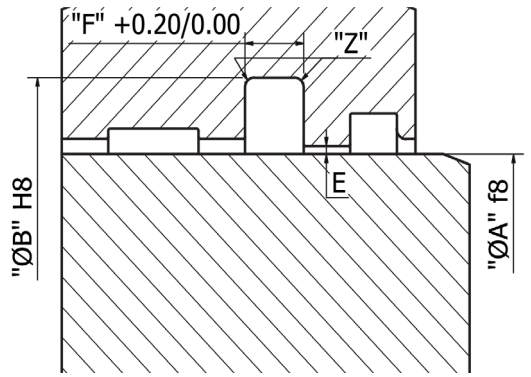

101.60

Part No	RTD 1016 1167 063					
Groove Dimension	ØA	x	ØB	x	F	
	101.60		116.70		6.30	
O-Ring Size	ID	107.32	x	C/S	5.33	

104.70

Part No	RTD 1047 1198 063					
Groove Dimension	ØA	x	ØB	x	F	
	104.70		119.80		6.30	
O-Ring Size	ID	110.49	x	C/S	5.33	

105.00

Part No	RTD 1050 1157 042					
Groove Dimension	ØA	x	ØB	x	F	
	105.00		115.70		4.20	
O-Ring Size	ID	110.72	x	C/S	3.53	

105.00

Part No	RTD 1050 1201 063					
Groove Dimension	ØA	x	ØB	x	F	
	105.00		120.10		6.30	
O-Ring Size	ID	110.49	x	C/S	5.33	

110.00

Part No	RTD 1100 1207 042					
Groove Dimension	ØA	x	ØB	x	F	
	110.00		120.70		4.20	
O-Ring Size	ID	113.89	x	C/S	3.53	

110.00

Part No	RTD 1100 1251 063					
Groove Dimension	ØA	x	ØB	x	F	
	110.00		125.10		6.30	
O-Ring Size	ID	116.84	x	C/S	5.33	

110.00

Part No	RTD 1100 1305 081					
Groove Dimension	ØA	x	ØB	x	F	
	110.00		130.50		8.10	
O-Ring Size	ID	120.02	x	C/S	7.00	

112.00

Part No	RTD 1120 1271 063					
Groove Dimension	ØA	x	ØB	x	F	
	112.00		127.10		6.30	
O-Ring Size	ID	116.84	x	C/S	5.33	

115.00

Part No	RTD 1150 1257 042					
Groove Dimension	ØA	x	ØB	x	F	
	115.00		125.70		4.20	
O-Ring Size	ID	120.24	x	C/S	3.53	

115.00

Part No	RTD 1150 1301 063					
Groove Dimension	ØA	x	ØB	x	F	
	115.00		130.10		6.30	
O-Ring Size	ID	120.02	x	C/S	5.33	

118.00

Part No	RTD 1180 1331 063					
Groove Dimension	ØA	x	ØB	x	F	
	118.00		133.10		6.30	
O-Ring Size	ID	123.19	x	C/S	5.33	

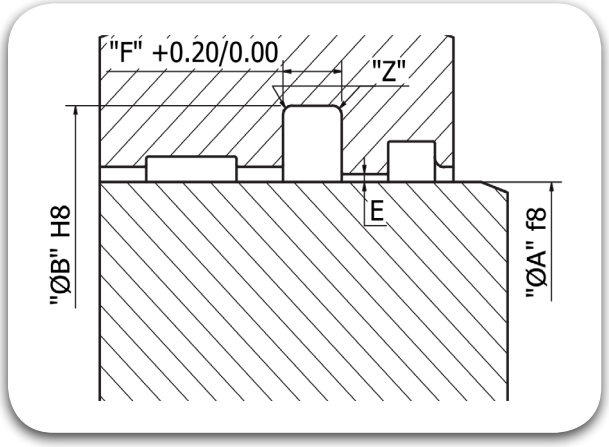

120.00

Part No	RTD 1200 1307 042		
Groove Dimension	ØA 120.00	ØB 130.70	F 4.20
O-Ring Size	ID 123.42	C/S 3.53	

120.00

Part No	RTD 1200 1357 063		
Groove Dimension	ØA 120.00	ØB 135.70	F 6.30
O-Ring Size	ID 126.37	C/S 5.33	

125.00

Part No	RTD 1250 1357 042		
Groove Dimension	ØA 125.00	ØB 135.70	F 4.20
O-Ring Size	ID 129.77	C/S 3.53	

125.00

Part No	RTD 1250 1401 063		
Groove Dimension	ØA 125.00	ØB 140.10	F 6.30
O-Ring Size	ID 129.54	C/S 5.33	

129.00

Part No	RTD 1290 1397 042		
Groove Dimension	ØA 129.00	ØB 139.70	F 4.20
O-Ring Size	ID 132.94	C/S 3.53	

130.00

Part No	RTD 1300 1407 042		
Groove Dimension	ØA 130.00	ØB 140.70	F 4.20
O-Ring Size	ID 136.12	C/S 3.53	

130.00

Part No	RTD 1300 1451 063		
Groove Dimension	ØA 130.00	ØB 145.10	F 6.30
O-Ring Size	ID 135.89	C/S 5.33	

135.00

Part No	RTD 1350 1457 042		
Groove Dimension	ØA 135.00	ØB 145.70	F 4.20
O-Ring Size	ID 139.29	C/S 3.53	

135.00

Part No	RTD 1350 1501 063		
Groove Dimension	ØA 135.00	ØB 150.10	F 6.30
O-Ring Size	ID 142.24	C/S 5.33	

140.00

Part No	RTD 1400 1507 042		
Groove Dimension	ØA 140.00	ØB 150.70	F 4.20
O-Ring Size	ID 145.64	C/S 3.53	

140.00

Part No	RTD 1400 1551 063		
Groove Dimension	ØA 140.00	ØB 155.10	F 6.30
O-Ring Size	ID 145.42	C/S 5.33	

145.00

Part No	RTD 1450 1557 042		
Groove Dimension	ØA 145.00	ØB 155.70	F 4.20
O-Ring Size	ID 148.82	C/S 3.53	

145.00

Part No	RTD 1450 1601 063		
Groove Dimension	ØA 145.00	ØB 160.10	F 6.30
O-Ring Size	ID 151.77	C/S 5.33	

150.00

Part No	RTD 1500 1651 063					
Groove Dimension	ØA	x	ØB	x	F	
	150.00		165.10		6.30	
O-Ring Size	ID	158.12	x	C/S	5.33	

160.00

Part No	RTD 1600 1751 063					
Groove Dimension	ØA	x	ØB	x	F	
	160.00		175.10		6.30	
O-Ring Size	ID	164.47	x	C/S	5.33	

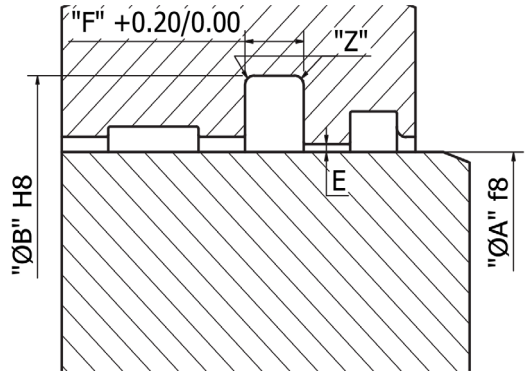

160.00

Part No	RTD 1600 1805 081					
Groove Dimension	ØA	x	ØB	x	F	
	160.00		180.50		8.10	
O-Ring Size	ID	170.82	x	C/S	7.00	

165.00

Part No	RTD 1650 1801 063					
Groove Dimension	ØA	x	ØB	x	F	
	165.00		180.10		6.30	
O-Ring Size	ID	170.82	x	C/S	5.33	

170.00

Part No	RTD 1700 1807 042					
Groove Dimension	ØA	x	ØB	x	F	
	170.00		180.70		4.20	
O-Ring Size	ID	177.39	x	C/S	3.53	

170.00

Part No	RTD 1700 1851 063					
Groove Dimension	ØA	x	ØB	x	F	
	170.00		185.10		6.30	
O-Ring Size	ID	177.17	x	C/S	5.33	

175.00

Part No	RTD 1750 1901 063					
Groove Dimension	ØA	x	ØB	x	F	
	175.00		190.10		6.30	
O-Ring Size	ID	183.52	x	C/S	5.33	

180.00

Part No	RTD 1800 1907 042					
Groove Dimension	ØA	x	ØB	x	F	
	180.00		190.70		4.20	
O-Ring Size	ID	183.74	x	C/S	3.53	

180.00

Part No	RTD 1800 1951 063					
Groove Dimension	ØA	x	ØB	x	F	
	180.00		195.10		6.30	
O-Ring Size	ID	183.17	x	C/S	5.33	

180.00

Part No	RTD 1800 2005 081					
Groove Dimension	ØA	x	ØB	x	F	
	180.00		200.50		8.10	
O-Ring Size	ID	189.87	x	C/S	7.00	

190.00

Part No	RTD 1900 2007 042					
Groove Dimension	ØA	x	ØB	x	F	
	190.00		200.70		4.20	
O-Ring Size	ID	196.44	x	C/S	3.53	

190.00

Part No	RTD 1900 2051 063					
Groove Dimension	ØA	x	ØB	x	F	
	190.00		205.10		6.30	
O-Ring Size	ID	196.22	x	C/S	5.33	

200.00

Part No	RTD 2000 2151 063					
Groove Dimension	ØA	x	ØB	x	F	
	200.00		215.10		6.30	
O-Ring Size	ID	208.92	x	C/S	5.33	

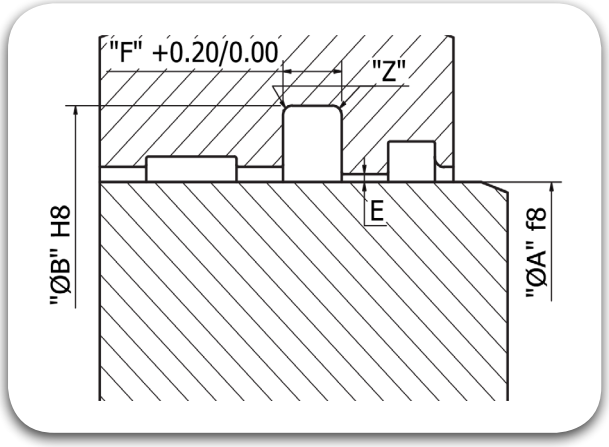

200.00

Part No	RTD 2000 2205 081		
Groove Dimension	ØA 200.00	ØB 220.50	F 8.10
O-Ring Size	ID 208.92	C/S 7.00	

205.00

Part No	RTD 2050 2201 063		
Groove Dimension	ØA 205.00	ØB 220.10	F 6.30
O-Ring Size	ID 208.92	C/S 5.33	

210.00

Part No	RTD 2100 2551 063		
Groove Dimension	ØA 210.00	ØB 225.10	F 6.30
O-Ring Size	ID 215.27	C/S 5.33	

220.00

Part No	RTD 2200 2351 063		
Groove Dimension	ØA 220.00	ØB 235.10	F 6.30
O-Ring Size	ID 227.97	C/S 5.33	

220.00

Part No	RTD 2200 2405 081		
Groove Dimension	ØA 220.00	ØB 240.50	F 8.10
O-Ring Size	ID 227.97	C/S 7.00	

230.00

Part No	RTD 2300 2451 063		
Groove Dimension	ØA 230.00	ØB 245.10	F 6.30
O-Ring Size	ID 234.32	C/S 5.33	

230.00

Part No	RTD 2300 2501 081		
Groove Dimension	ØA 230.00	ØB 250.10	F 8.10
O-Ring Size	ID 240.67	C/S 7.00	

240.00

Part No	RTD 2400 2551 063		
Groove Dimension	ØA 240.00	ØB 255.10	F 6.30
O-Ring Size	ID 247.02	C/S 5.33	

240.00

Part No	RTD 2400 2605 081		
Groove Dimension	ØA 240.00	ØB 260.50	F 8.10
O-Ring Size	ID 253.37	C/S 7.00	

250.00

Part No	RTD 2500 2705 081		
Groove Dimension	ØA 250.00	ØB 270.50	F 8.10
O-Ring Size	ID 266.07	C/S 7.00	

260.00

Part No	RTD 2600 2840 081		
Groove Dimension	ØA 260.00	ØB 284.00	F 8.10
O-Ring Size	ID 266.07	C/S 7.00	

270.00

Part No	RTD 2700 2905 081		
Groove Dimension	ØA 270.00	ØB 290.50	F 8.10
O-Ring Size	ID 278.77	C/S 7.00	

270.00

Part No	RTD 2700 2940 081		
Groove Dimension	ØA 270.00	ØB 294.00	F 8.10
O-Ring Size	ID 278.77	C/S 7.00	

275.00

Part No	RTD 2750 2990 081				
Groove Dimension	ØA	x	ØB	x	F
	275.00		299.00		8.10
O-Ring Size	ID	291.47	x	C/S	7.00

280.00

Part No	RTD 2800 3005 081				
Groove Dimension	ØA	x	ØB	x	F
	280.00		300.50		8.10
O-Ring Size	ID	291.47	x	C/S	7.00

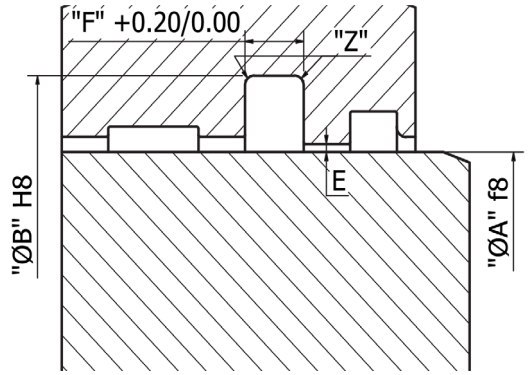

280.00

Part No	RTD 2800 3040 081				
Groove Dimension	ØA	x	ØB	x	F
	280.00		304.00		8.10
O-Ring Size	ID	291.47	x	C/S	7.00

290.00

Part No	RTD 2900 3105 081				
Groove Dimension	ØA	x	ØB	x	F
	290.00		310.50		8.10
O-Ring Size	ID	304.17	x	C/S	7.00

290.00

Part No	RTD 2900 3140 081				
Groove Dimension	ØA	x	ØB	x	F
	290.00		314.00		8.10
O-Ring Size	ID	304.17	x	C/S	7.00

300.00

Part No	RTD 3000 3240 081				
Groove Dimension	ØA	x	ØB	x	F
	300.00		324.00		8.10
O-Ring Size	ID	316.87	x	C/S	7.00

310.00

Part No	RTD 3100 3305 081				
Groove Dimension	ØA	x	ØB	x	F
	310.00		330.50		8.10
O-Ring Size	ID	316.87	x	C/S	7.00

310.00

Part No	RTD 3100 3340 081				
Groove Dimension	ØA	x	ØB	x	F
	310.00		334.00		8.10
O-Ring Size	ID	316.87	x	C/S	7.00

320.00

Part No	RTD 3200 3440 081				
Groove Dimension	ØA	x	ØB	x	F
	320.00		344.00		8.10
O-Ring Size	ID	329.57	x	C/S	7.00

330.00

Part No	RTD 3300 3540 081				
Groove Dimension	ØA	x	ØB	x	F
	330.00		354.00		8.10
O-Ring Size	ID	342.47	x	C/S	7.00

340.00

Part No	RTD 3400 3640 081				
Groove Dimension	ØA	x	ØB	x	F
	340.00		364.00		8.10
O-Ring Size	ID	354.97	x	C/S	7.00

315.00

Part No	RTD 3150 3705 081				
Groove Dimension	ØA	x	ØB	x	F
	315.00		370.50		8.10
O-Ring Size	ID	354.97	x	C/S	7.00

350.00

Part No	RTD 3500 3740 081				
Groove Dimension	ØA	x	ØB	x	F
	350.00		374.00		8.10
O-Ring Size	ID	367.67	x	C/S	7.00

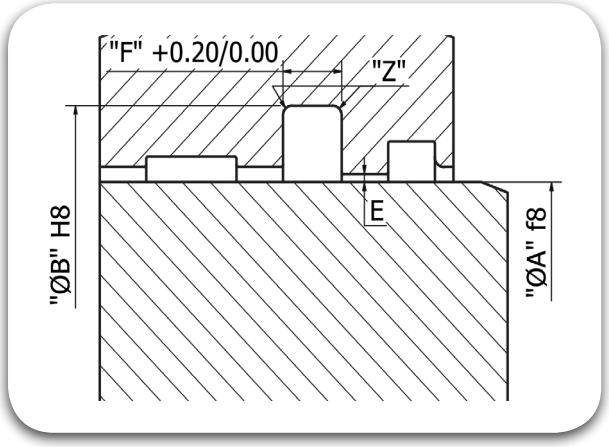

360.00

Part No	RTD 3600 3840 081		
Groove Dimension	ØA 360.00	ØB 384.00	F 8.10
O-Ring Size	ID 367.67	C/S 7.00	

370.00

Part No	RTD 3700 3905 081		
Groove Dimension	ØA 370.00	ØB 390.50	F 8.10
O-Ring Size	ID 380.37	C/S 7.00	

370.00

Part No	RTD 3700 3940 081		
Groove Dimension	ØA 370.00	ØB 394.00	F 8.10
O-Ring Size	ID 380.37	C/S 7.00	

380.00

Part No	RTD 3800 4040 081		
Groove Dimension	ØA 380.00	ØB 404.00	F 8.10
O-Ring Size	ID 393.07	C/S 7.00	

390.00

Part No	RTD 3900 4140 081		
Groove Dimension	ØA 390.00	ØB 414.00	F 8.10
O-Ring Size	ID 405.26	C/S 7.00	

400.00

Part No	RTD 4000 4205 081		
Groove Dimension	ØA 400.00	ØB 420.50	F 8.10
O-Ring Size	ID 417.96	C/S 7.00	

400.00

Part No	RTD 4000 4240 081		
Groove Dimension	ØA 400.00	ØB 424.00	F 8.10
O-Ring Size	ID 417.96	C/S 7.00	

410.00

Part No	RTD 4100 4340 081		
Groove Dimension	ØA 410.00	ØB 434.00	F 8.10
O-Ring Size	ID 417.96	C/S 7.00	

420.00

Part No	RTD 4200 4440 081		
Groove Dimension	ØA 420.00	ØB 444.00	F 8.10
O-Ring Size	ID 430.66	C/S 7.00	

430.00

Part No	RTD 4300 4540 081		
Groove Dimension	ØA 430.00	ØB 454.00	F 8.10
O-Ring Size	ID 443.36	C/S 7.00	

440.00

Part No	RTD 4400 4640 081		
Groove Dimension	ØA 440.00	ØB 464.00	F 8.10
O-Ring Size	ID 456.06	C/S 7.00	

450.00

Part No	RTD 4500 4740 081		
Groove Dimension	ØA 450.00	ØB 474.00	F 8.10
O-Ring Size	ID 468.76	C/S 7.00	

460.00

Part No	RTD 4600 4840 081		
Groove Dimension	ØA 460.00	ØB 484.00	F 8.10
O-Ring Size	ID 468.76	C/S 7.00	

470.00

Part No	RTD 4700 4940 081
Groove Dimension	ØA 470.00 x ØB 494.00 x F 8.10
O-Ring Size	ID 481.00 x C/S 7.00

480.00

Part No	RTD 4800 5040 081
Groove Dimension	ØA 480.00 x ØB 504.00 x F 8.10
O-Ring Size	ID 494.16 x C/S 7.00

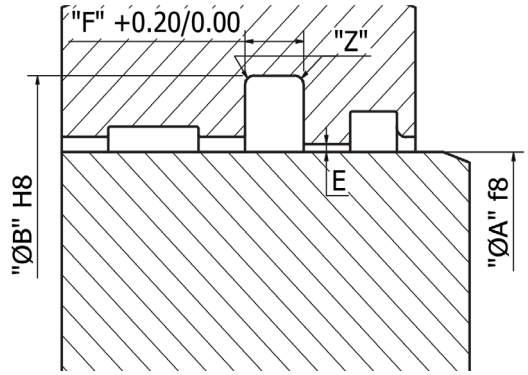

490.00

Part No	RTD 4900 5140 081
Groove Dimension	ØA 490.00 x ØB 514.00 x F 8.10
O-Ring Size	ID 506.86 x C/S 7.00

500.00

Part No	RTD 5000 5240 081
Groove Dimension	ØA 500.00 x ØB 524.00 x F 8.10
O-Ring Size	ID 506.86 x C/S 7.00

510.00

Part No	RTD 5100 5340 081
Groove Dimension	ØA 510.00 x ØB 534.00 x F 8.10
O-Ring Size	ID 532.26 x C/S 7.00

520.00

Part No	RTD 5200 5440 081
Groove Dimension	ØA 520.00 x ØB 544.00 x F 8.10
O-Ring Size	ID 532.26 x C/S 7.00

530.00

Part No	RTD 5300 5540 081
Groove Dimension	ØA 530.00 x ØB 554.00 x F 8.10
O-Ring Size	ID 557.66 x C/S 7.00

540.00

Part No	RTD 5400 5640 081
Groove Dimension	ØA 540.00 x ØB 564.00 x F 8.10
O-Ring Size	ID 557.66 x C/S 7.00

550.00

Part No	RTD 5500 5740 081
Groove Dimension	ØA 550.00 x ØB 574.00 x F 8.10
O-Ring Size	ID 557.66 x C/S 7.00

560.00

Part No	RTD 5600 5840 081
Groove Dimension	ØA 560.00 x ØB 584.00 x F 8.10
O-Ring Size	ID 582.68 x C/S 7.00

570.00

Part No	RTD 5700 5940 081
Groove Dimension	ØA 570.00 x ØB 594.00 x F 8.10
O-Ring Size	ID 582.68 x C/S 7.00

580.00

Part No	RTD 5800 6040 081
Groove Dimension	ØA 580.00 x ØB 604.00 x F 8.10
O-Ring Size	ID 608.08 x C/S 7.00

590.00

Part No	RTD 5900 6140 081
Groove Dimension	ØA 590.00 x ØB 614.00 x F 8.10
O-Ring Size	ID 608.08 x C/S 7.00

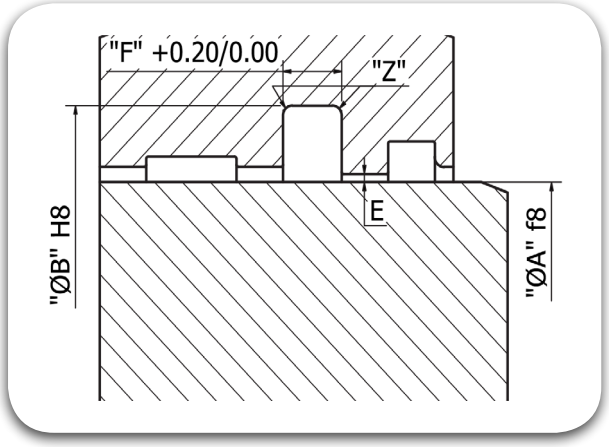

600.00

Part No	RTD 6000 6240 081		
Groove Dimension	ØA 600.00	ØB 624.00	F 8.10
O-Ring Size	ID 608.08	C/S 7.00	

610.00

Part No	RTD 6100 6340 081		
Groove Dimension	ØA 610.00	ØB 634.00	F 8.10
O-Ring Size	ID 633.48	C/S 7.00	

620.00

Part No	RTD 6200 6440 081		
Groove Dimension	ØA 620.00	ØB 644.00	F 8.10
O-Ring Size	ID 633.48	C/S 7.00	

630.00

Part No	RTD 6300 6540 081		
Groove Dimension	ØA 630.00	ØB 654.00	F 8.10
O-Ring Size	ID 658.88	C/S 7.00	

640.00

Part No	RTD 6400 6640 081		
Groove Dimension	ØA 640.00	ØB 664.00	F 8.10
O-Ring Size	ID 658.88	C/S 7.00	

650.00

Part No	RTD 6500 6773 095		
Groove Dimension	ØA 650.00	ØB 677.30	F 9.50
O-Ring Size	ID 663.00	C/S 8.40	

660.00

Part No	RTD 6600 6873 095		
Groove Dimension	ØA 660.00	ØB 687.30	F 9.50
O-Ring Size	ID 673.00	C/S 8.40	

670.00

Part No	RTD 6700 6973 095		
Groove Dimension	ØA 670.00	ØB 697.30	F 9.50
O-Ring Size	ID 683.00	C/S 8.40	

680.00

Part No	RTD 6800 7073 095		
Groove Dimension	ØA 680.00	ØB 707.30	F 9.50
O-Ring Size	ID 693.00	C/S 8.40	

688.00

Part No	RTD 6880 7153 095		
Groove Dimension	ØA 688.00	ØB 715.30	F 9.50
O-Ring Size	ID 701.00	C/S 8.40	

690.00

Part No	RTD 6900 7173 095		
Groove Dimension	ØA 690.00	ØB 717.30	F 9.50
O-Ring Size	ID 703.00	C/S 8.40	

700.00

Part No	RTD 7000 7240 081		
Groove Dimension	ØA 700.00	ØB 724.00	F 8.10
O-Ring Size	ID 712.00	C/S 7.00	

710.00

Part No	RTD 7100 7373 095		
Groove Dimension	ØA 710.00	ØB 737.30	F 9.50
O-Ring Size	ID 723.00	C/S 8.40	

740.00

Part No	RTD 7400 7673 095				
Groove Dimension	ØA	x	ØB	x	F
	740.00		767.30		9.50
O-Ring Size	ID 753.00	x	C/S 8.40		

760.00

Part No	RTD 7600 7840 081				
Groove Dimension	ØA	x	ØB	x	F
	760.00		784.00		8.10
O-Ring Size	ID 772.00	x	C/S 7.00		

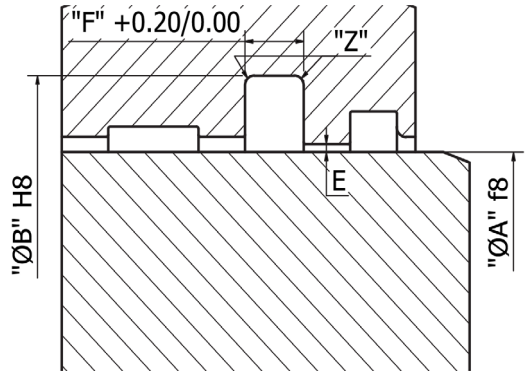

770.00

Part No	RTD 7700 7973 095				
Groove Dimension	ØA	x	ØB	x	F
	770.00		797.30		9.50
O-Ring Size	ID 783.00	x	C/S 8.40		

800.00

Part No	RTD 8000 8273 095				
Groove Dimension	ØA	x	ØB	x	F
	800.00		827.30		9.50
O-Ring Size	ID 813.00	x	C/S 8.40		

850.00

Part No	RTD 8500 8830 095				
Groove Dimension	ØA	x	ØB	x	F
	850.00		877.30		9.50
O-Ring Size	ID 863.00	x	C/S 8.40		

870.00

Part No	RTD 8700 8973 095				
Groove Dimension	ØA	x	ØB	x	F
	870.00		897.30		9.50
O-Ring Size	ID 883.00	x	C/S 8.40		

900.00

Part No	RTD 9000 9273 095				
Groove Dimension	ØA	x	ØB	x	F
	900.00		927.30		9.50
O-Ring Size	ID 913.00	x	C/S 8.40		

910.00

Part No	RTD 9100 9373 095				
Groove Dimension	ØA	x	ØB	x	F
	910.00		937.30		9.50
O-Ring Size	ID 923.00	x	C/S 8.40		

950.00

Part No	RTD 9500 9773 095				
Groove Dimension	ØA	x	ØB	x	F
	950.00		977.30		9.50
O-Ring Size	ID 963.00	x	C/S 8.40		

960.00

Part No	RTD 9600 9873 095				
Groove Dimension	ØA	x	ØB	x	F
	960.00		987.30		9.50
O-Ring Size	ID 973.00	x	C/S 8.40		

1000.00

Part No	RTDX1000 1027 095				
Groove Dimension	ØA	x	ØB	x	F
	1000.00		1027.30		9.50
O-Ring Size	ID 1013.00	x	C/S 8.40		

1000.00

Part No	RTDX1000 1038 138				
Groove Dimension	ØA	x	ØB	x	F
	1000.00		1038.00		13.80
O-Ring Size	ID 1016.00	x	C/S 12.00		

1050.00

Part No	RTDX1050 1077 095				
Groove Dimension	ØA	x	ØB	x	F
	1050.00		1077.30		9.50
O-Ring Size	ID 1063.00	x	C/S 8.40		

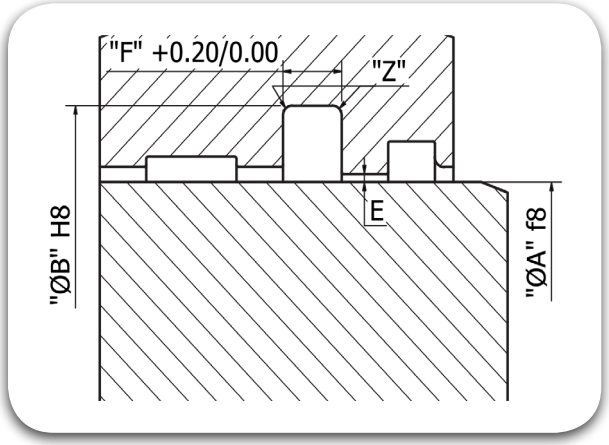

1050.00

Part No	RTDX1050 1088 138		
Groove Dimension	ØA 1050.00	ØB 1088.00	F 13.80
O-Ring Size	ID 1066.00	C/S 12.00	

1100.00

Part No	RTDX1100 1138 138		
Groove Dimension	ØA 1100.00	ØB 1138.00	F 13.80
O-Ring Size	ID 1116.00	C/S 12.00	

1160.00

Part No	RTDX1160 1187 095		
Groove Dimension	ØA 1160.00	ØB 1187.30	F 9.50
O-Ring Size	ID 1173.00	C/S 8.40	

1200.00

Part No	RTDX1200 1227 095		
Groove Dimension	ØA 1200.00	ØB 1227.30	F 9.50
O-Ring Size	ID 1213.00	C/S 8.40	

1200.00

Part No	RTDX1200 1238 138		
Groove Dimension	ØA 1200.00	ØB 1238.00	F 13.80
O-Ring Size	ID 1216.00	C/S 12.00	

1300.00

Part No	RTDX1300 1327 095		
Groove Dimension	ØA 1300.00	ØB 1327.30	F 9.50
O-Ring Size	ID 1313.00	C/S 8.40	

1300.00

Part No	RTDX1300 1338 138		
Groove Dimension	ØA 1300.00	ØB 1338.00	F 13.80
O-Ring Size	ID 1316.00	C/S 12.00	

1500.00

Part No	RTDX1500 1527 095		
Groove Dimension	ØA 1500.00	ØB 1527.30	F 9.50
O-Ring Size	ID 1513.00	C/S 8.40	

1500.00

Part No	RTDX1500 1538 138		
Groove Dimension	ØA 1500.00	ØB 1538.00	F 13.80
O-Ring Size	ID 1516.00	C/S 12.00	

1600.00

Part No	RTDX1600 1638 138		
Groove Dimension	ØA 1600.00	ØB 1638.00	F 13.80
O-Ring Size	ID 1616.00	C/S 12.00	

2000.00

Part No	RTDX2000 2038 138		
Groove Dimension	ØA 2000.00	ØB 2038.00	F 13.80
O-Ring Size	ID 2016.00	C/S 12.00	

2600.00

Part No	RTDX2600 2638 138		
Groove Dimension	ØA 2600.00	ØB 2638.00	F 13.80
O-Ring Size	ID 2616.00	C/S 12.00	

Rod Seals

RES

TRIADA
TECHNOLOGIES

#SealingExcellence




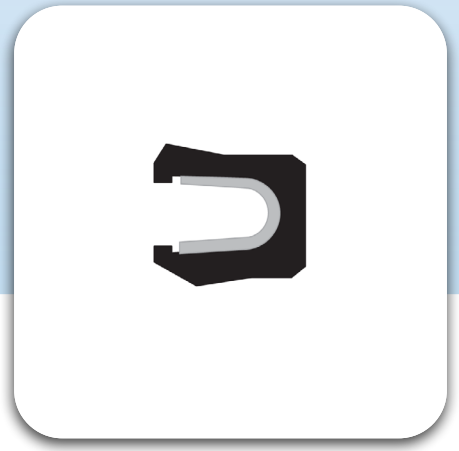

Description

The RES Seal is a unidirectional seal and composed of two elements. The U-Shaped dynamic seal is a ring in TRIALON® (filled PTFE) while the energizer is a cantilever or helical or slant coil spring. Depending on the application, media, cycle speed etc., the PTFE compound is selected. Lesser area of contact offers reduced wear, thus increasing the life of the Seal.

Diameter Range	Ø3.00 – Ø1500.00
Standard material	TRIALON® T415/T417 (Bronze / Carbon Filled PTFE) with Stainless Steel Cantilever Spring.
Temperature(°C)	-70° C to 260° C
Speed	≤ 15.00 m/s
Fluids	Hydraulic fluids (Mineral Oil based), Water, Air, Chemical & Gases etc depending on Seal Compounds selected.
Pressure	≤ 2000 bar

Reciprocating · Oscillating · Rotary · Helix · Static · Single Acting · Double Acting

Material Details

Seal Material	Seal Material Code	Spring Material Code	Spring Type Code
TRIALON® Bronze Filled PTFE	T415	S Stainless Steel	C Cantilever
TRIALON® Carbon Filled PTFE	T417	H Hastelloy	L Helical
		E Elgiloy	T Slant coil

Nomenclature

Part No	RES	0480	0574	071	T415	S	L
	Seal profile	Bore Dia x 10	Groove Dia x 10	Groove Width x 10	Seal Material Code	Spring Material Code	Spring Type Code

Groove Details

Rod Diameter "A" f8	Radial Clearance "E" max			
Standard Range	<20 Bar	<100 Bar	<200 Bar	<400 Bar
6.00 - 13.90	0.20	0.10	0.08	0.05
14.00 - 24.90	0.25	0.15	0.10	0.07
25.00 - 45.90	0.35	0.20	0.15	0.08
46.00 - 124.90	0.50	0.25	0.20	0.10
125.00 - 999.90	0.60	0.30	0.25	0.12
1000.00 - 2700.00	0.90	0.50	0.40	0.20

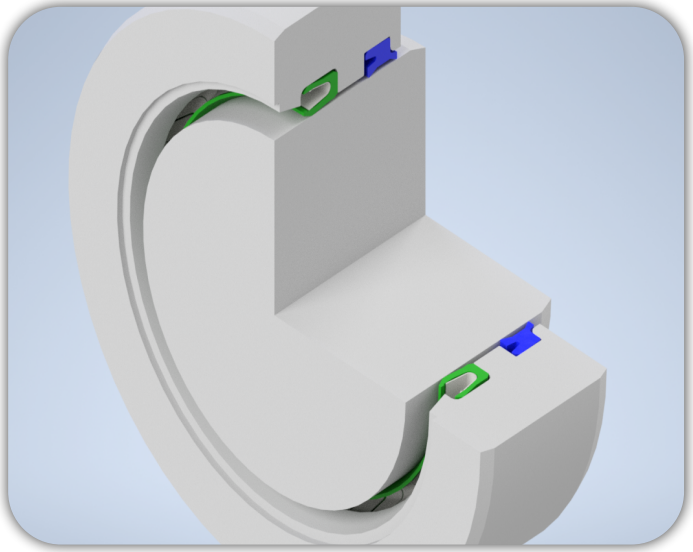

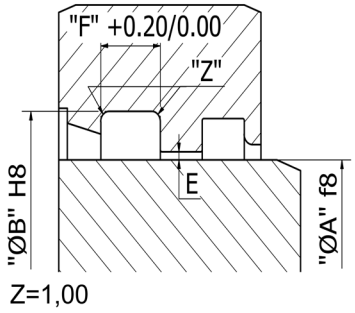

3.00

Part No	RES 0030 0059 024				
Groove Dimension	ØA	x	ØB	x	F
	3.00		5.90		2.40

4.00

Part No	RES 0040 0069 024				
Groove Dimension	ØA	x	ØB	x	F
	4.00		6.90		2.40

5.00

Part No	RES 0050 0079 024				
Groove Dimension	ØA	x	ØB	x	F
	5.00		7.90		2.40

6.00

Part No	RES 0060 0089 024				
Groove Dimension	ØA	x	ØB	x	F
	6.00		8.90		2.40

8.00

Part No	RES 0080 0109 024				
Groove Dimension	ØA	x	ØB	x	F
	8.00		10.90		2.40

10.00

Part No	RES 0100 0145 036				
Groove Dimension	ØA	x	ØB	x	F
	10.00		14.50		3.60

12.00

Part No	RES 0120 0165 036				
Groove Dimension	ØA	x	ØB	x	F
	12.00		16.50		3.60

14.00

Part No	RES 0140 0185 036				
Groove Dimension	ØA	x	ØB	x	F
	14.00		18.50		3.60

15.00

Part No	RES 0150 0195 036				
Groove Dimension	ØA	x	ØB	x	F
	15.00		19.50		3.60

16.00

Part No	RES 0160 0205 036				
Groove Dimension	ØA	x	ØB	x	F
	16.00		20.50		3.60

18.00

Part No	RES 0180 0225 036				
Groove Dimension	ØA	x	ØB	x	F
	18.00		22.50		3.60

20.00

Part No	RES 0200 0262 048				
Groove Dimension	ØA	x	ØB	x	F
	20.00		26.20		4.80

22.00

Part No	RES 0220 0282 048				
Groove Dimension	ØA	x	ØB	x	F
	22.00		28.20		4.80

25.00

Part No	RES 0250 0312 048					
Groove Dimension	ØA	x	ØB	x	F	
	25.00		31.20		4.80	

28.00

Part No	RES 0280 0342 048					
Groove Dimension	ØA	x	ØB	x	F	
	28.00		34.20		4.80	

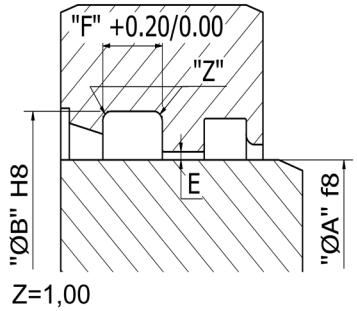

30.00

Part No	RES 0300 0362 048					
Groove Dimension	ØA	x	ØB	x	F	
	30.00		36.20		4.80	

32.00

Part No	RES 0320 0382 048					
Groove Dimension	ØA	x	ØB	x	F	
	32.00		38.20		4.80	

35.00

Part No	RES 0350 0412 048					
Groove Dimension	ØA	x	ØB	x	F	
	35.00		41.20		4.80	

36.00

Part No	RES 0360 0422 048					
Groove Dimension	ØA	x	ØB	x	F	
	36.00		42.20		4.80	

40.00

Part No	RES 0400 0494 071					
Groove Dimension	ØA	x	ØB	x	F	
	40.00		49.40		7.10	

42.00

Part No	RES 0420 0514 071					
Groove Dimension	ØA	x	ØB	x	F	
	42.00		51.40		7.10	

45.00

Part No	RES 0450 0544 071					
Groove Dimension	ØA	x	ØB	x	F	
	45.00		54.40		7.10	

48.00

Part No	RES 0480 0574 071					
Groove Dimension	ØA	x	ØB	x	F	
	48.00		57.40		7.10	

50.00

Part No	RES 0500 0594 071					
Groove Dimension	ØA	x	ØB	x	F	
	50.00		59.40		7.10	

52.00

Part No	RES 0520 0614 071					
Groove Dimension	ØA	x	ØB	x	F	
	52.00		61.40		7.10	

55.00

Part No	RES 0550 0644 071					
Groove Dimension	ØA	x	ØB	x	F	
	55.00		64.40		7.10	

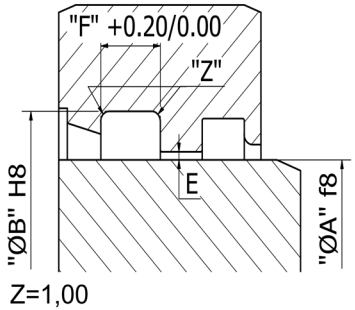

56.00

Part No	RES 0560 0654 071				
Groove Dimension	ØA	x	ØB	x	F
	56.00		65.40		7.10

60.00

Part No	RES 0600 0694 071				
Groove Dimension	ØA	x	ØB	x	F
	60.00		69.40		7.10

63.00

Part No	RES 0630 0724 071				
Groove Dimension	ØA	x	ØB	x	F
	63.00		72.40		7.10

65.00

Part No	RES 0650 0744 071				
Groove Dimension	ØA	x	ØB	x	F
	65.00		74.40		7.10

70.00

Part No	RES 0700 0794 071				
Groove Dimension	ØA	x	ØB	x	F
	70.00		79.40		7.10

75.00

Part No	RES 0750 0844 071				
Groove Dimension	ØA	x	ØB	x	F
	75.00		84.40		7.10

80.00

Part No	RES 0800 0894 071				
Groove Dimension	ØA	x	ØB	x	F
	80.00		89.40		7.10

85.00

Part No	RES 0850 0944 071				
Groove Dimension	ØA	x	ØB	x	F
	85.00		94.40		7.10

90.00

Part No	RES 0900 0994 071				
Groove Dimension	ØA	x	ØB	x	F
	90.00		99.40		7.10

95.00

Part No	RES 0950 1044 071				
Groove Dimension	ØA	x	ØB	x	F
	95.00		104.40		7.10

100.00

Part No	RES 1000 1094 071				
Groove Dimension	ØA	x	ØB	x	F
	100.00		109.40		7.10

105.00

Part No	RES 1050 1144 071				
Groove Dimension	ØA	x	ØB	x	F
	105.00		114.40		7.10

110.00

Part No	RES 1100 1194 071				
Groove Dimension	ØA	x	ØB	x	F
	110.00		119.40		7.10

115.00

Part No	RES 1150 1244 071		
Groove Dimension	ØA	ØB	F
	115.00	124.40	7.10

120.00

Part No	RES 1200 1322 095		
Groove Dimension	ØA	ØB	F
	120.00	132.20	9.50

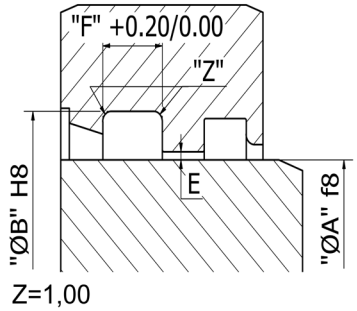

125.00

Part No	RES 1250 1372 095		
Groove Dimension	ØA	ØB	F
	125.00	137.20	9.50

130.00

Part No	RES 1300 1422 095		
Groove Dimension	ØA	ØB	F
	130.00	142.20	9.50

135.00

Part No	RES 1350 1472 095		
Groove Dimension	ØA	ØB	F
	135.00	147.20	9.50

140.00

Part No	RES 1400 1522 095		
Groove Dimension	ØA	ØB	F
	140.00	152.20	9.50

150.00

Part No	RES 1500 1622 095		
Groove Dimension	ØA	ØB	F
	150.00	162.20	9.50

160.00

Part No	RES 1600 1722 095		
Groove Dimension	ØA	ØB	F
	160.00	172.20	9.50

170.00

Part No	RES 1700 1822 095		
Groove Dimension	ØA	ØB	F
	170.00	182.20	9.50

180.00

Part No	RES 1800 1922 095		
Groove Dimension	ØA	ØB	F
	180.00	192.20	9.50

190.00

Part No	RES 1900 2022 095		
Groove Dimension	ØA	ØB	F
	190.00	202.20	9.50

200.00

Part No	RES 2000 2122 095		
Groove Dimension	ØA	ØB	F
	200.00	212.20	9.50

210.00

Part No	RES 2100 2222 095		
Groove Dimension	ØA	ØB	F
	210.00	222.20	9.50

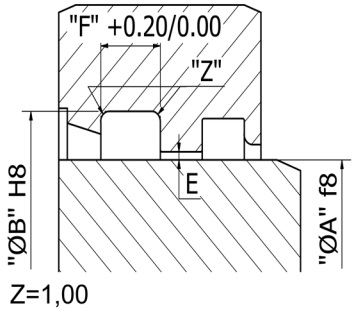

220.00

Part No	RES 2200 2322 095				
Groove Dimension	ØA	x	ØB	x	F
	220.00		232.20		9.50

230.00

Part No	RES 2300 2422 095				
Groove Dimension	ØA	x	ØB	x	F
	230.00		242.20		9.50

240.00

Part No	RES 2400 2522 095				
Groove Dimension	ØA	x	ØB	x	F
	240.00		252.20		9.50

250.00

Part No	RES 2500 2622 095				
Groove Dimension	ØA	x	ØB	x	F
	250.00		262.20		9.50

280.00

Part No	RES 2800 2922 095				
Groove Dimension	ØA	x	ØB	x	F
	280.00		292.20		9.50

300.00

Part No	RES 3000 3122 095				
Groove Dimension	ØA	x	ØB	x	F
	300.00		312.20		9.50

320.00

Part No	RES 3200 3322 095				
Groove Dimension	ØA	x	ØB	x	F
	320.00		332.20		9.50

350.00

Part No	RES 3500 3622 095				
Groove Dimension	ØA	x	ØB	x	F
	350.00		362.20		9.50

360.00

Part No	RES 3600 3722 095				
Groove Dimension	ØA	x	ØB	x	F
	360.00		372.20		9.50

400.00

Part No	RES 4000 4122 095				
Groove Dimension	ØA	x	ØB	x	F
	400.00		412.20		9.50

Rod Seals

RHC3

TRIADA
TECHNOLOGIES

#SealingExcellence




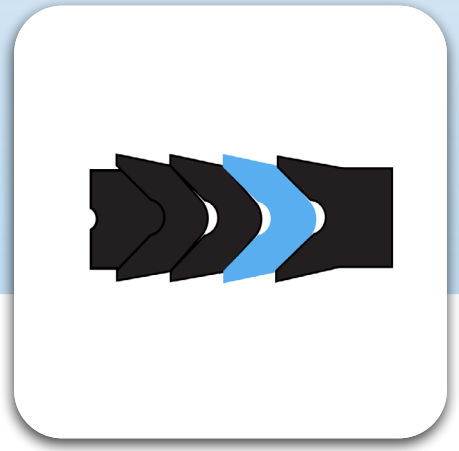

Description

The RHC3 Seal is similar to RHC seal with extra V Rings for high sealing efficiency and it is also a single acting Rod seal consist of a rugged central element in TRIAFLEX® (NBR) with fabric reinforcement, performing the main sealing function and to avoid the extrusion it is again supported by two cotton fabric reinforced TRIAFLEX® Ring. To ensure a uniform preload of the seal the expander made of TRIAMIDE® (POM) is being used at the front which is again supported by TRIAFLEX® material.

Diameter Range	Ø20.00 – Ø280.00
Standard material	V-Ring is of TRIAFLEX® T571(NBR), Spreader Ring is of TRIAFLEX® T543 (compounded with cotton fabric), Base Ring is TRIAMIDE® T485(POM).
Temperature(°C)	-40° C to 200° C (Based on Elastomer Material)
Speed	≤ 0.50 m/s
Fluids	Hydraulic fluids (Mineral Oil based).
Pressure	< 400 bar

Reciprocating | Oscillating | Rotary | Helix | Static | Single Acting | Double Acting

Material Details

V-Ring Material	Material Code	Spreader Ring Material / Code	Base Ring Material / Code
TRIAFLEX® T571 NBR 70	CXN	TRIAFLEX® - compounded with cotton fabric (T543)	TRIAMIDE® POM (T485)
TRIAFLEX® T675 FKM 70	CXF		

Nomenclature

Part No	RHC3	1000	1150	300	CXN
	Seal profile	Rod Dia x 10	Groove Dia x 10	Groove Width x 10	Seal Material Code

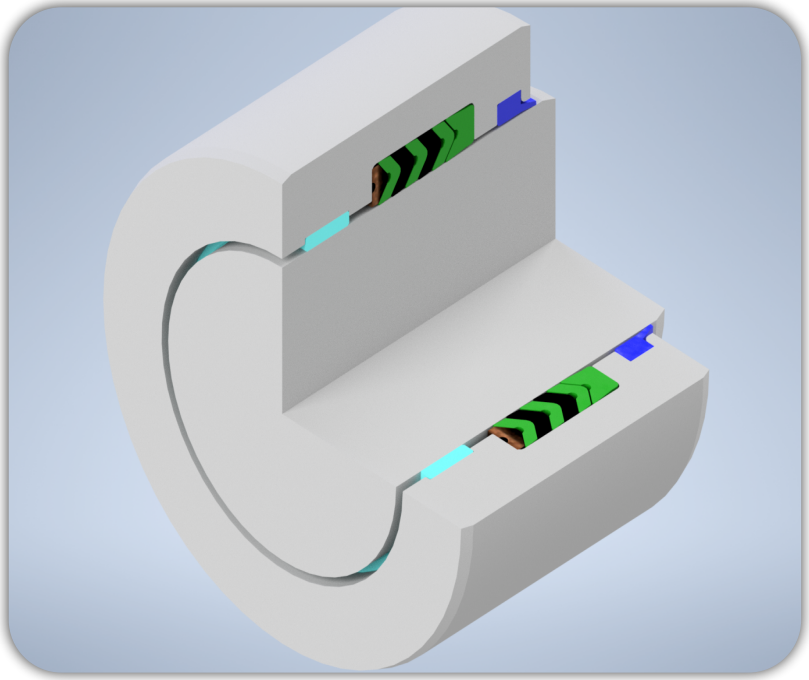

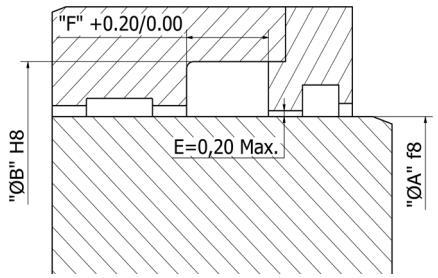

25.00

Part No	RHC3 0250 0370 225 CX					
Groove Dimension	ØA	x	ØB	x	F	
	25.00		37.00		22.50	

25.00

Part No	RHC3 0250 0400 225 CX					
Groove Dimension	ØA	x	ØB	x	F	
	25.00		40.00		22.50	

28.00

Part No	RHC3 0280 0400 225 CX					
Groove Dimension	ØA	x	ØB	x	F	
	28.00		40.00		22.50	

30.00

Part No	RHC3 0300 0450 225 CX					
Groove Dimension	ØA	x	ØB	x	F	
	30.00		45.00		22.50	

36.00

Part No	RHC3 0360 0480 225 CX					
Groove Dimension	ØA	x	ØB	x	F	
	36.00		48.00		22.50	

40.00

Part No	RHC3 0400 0550 225 CX					
Groove Dimension	ØA	x	ØB	x	F	
	40.00		55.00		22.50	

45.00

Part No	RHC3 0450 0600 225 CX					
Groove Dimension	ØA	x	ØB	x	F	
	45.00		60.00		22.50	

45.00

Part No	RHC3 0450 0650 275 CX					
Groove Dimension	ØA	x	ØB	x	F	
	45.00		65.00		27.50	

50.00

Part No	RHC3 0500 0650 225 CX					
Groove Dimension	ØA	x	ØB	x	F	
	50.00		65.00		22.50	

56.00

Part No	RHC3 0560 0710 225 CX					
Groove Dimension	ØA	x	ØB	x	F	
	56.00		71.00		22.50	

60.00

Part No	RHC3 0600 0800 370 CX					
Groove Dimension	ØA	x	ØB	x	F	
	60.00		80.00		37.00	

65.00

Part No	RHC3 0650 0850 400 CX					
Groove Dimension	ØA	x	ØB	x	F	
	65.00		85.00		40.00	

70.00

Part No	RHC3 0700 0850 225 CX					
Groove Dimension	ØA	x	ØB	x	F	
	70.00		85.00		22.50	

70.00

Part No	RHC3 0700 0900 400 CX		
Groove Dimension	ØA	ØB	F
	70.00	90.00	40.00

75.00

Part No	RHC3 0750 0900 225 CX		
Groove Dimension	ØA	ØB	F
	75.00	90.00	22.50

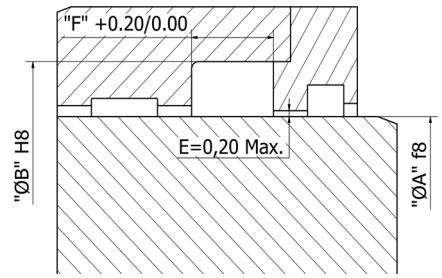

80.00

Part No	RHC3 0800 0950 225 CX		
Groove Dimension	ØA	ØB	F
	80.00	95.00	22.50

80.00

Part No	RHC3 0800 1000 400 CX		
Groove Dimension	ØA	ØB	F
	80.00	100.00	40.00

85.00

Part No	RHC3 0850 1000 225 CX		
Groove Dimension	ØA	ØB	F
	85.00	100.00	22.50

90.00

Part No	RHC3 0900 1050 225 CX		
Groove Dimension	ØA	ØB	F
	90.00	105.00	22.50

90.00

Part No	RHC3 0900 1100 400 CX		
Groove Dimension	ØA	ØB	F
	90.00	110.00	40.00

100.00

Part No	RHC3 1000 1150 300 CX		
Groove Dimension	ØA	ØB	F
	100.00	115.00	30.00

100.00

Part No	RHC3 1000 1200 400 CX		
Groove Dimension	ØA	ØB	F
	100.00	120.00	40.00

110.00

Part No	RHC3 1100 1250 300 CX		
Groove Dimension	ØA	ØB	F
	110.00	125.00	30.00

110.00

Part No	RHC3 1100 1300 400 CX		
Groove Dimension	ØA	ØB	F
	110.00	130.00	40.00

120.00

Part No	RHC3 1200 1450 500 CX		
Groove Dimension	ØA	ØB	F
	120.00	145.00	50.00

125.00

Part No	RHC3 1250 1400 340 CX		
Groove Dimension	ØA	ØB	F
	125.00	140.00	34.00

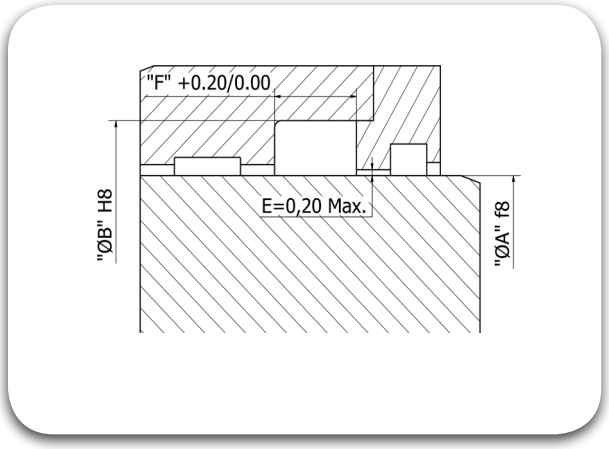

125.00

Part No	RHC3 1250 1500 460 CX				
Groove Dimension	ØA	x	ØB	x	F
	125.00		150.00		46.00

140.00

Part No	RHC3 1400 1550 340 CX				
Groove Dimension	ØA	x	ØB	x	F
	140.00		155.00		34.00

140.00

Part No	RHC3 1400 1650 460 CX				
Groove Dimension	ØA	x	ØB	x	F
	140.00		165.00		46.00

160.00

Part No	RHC3 1600 1800 400 CX				
Groove Dimension	ØA	x	ØB	x	F
	160.00		180.00		40.00

160.00

Part No	RHC3 1600 1900 600 CX				
Groove Dimension	ØA	x	ØB	x	F
	160.00		190.00		60.00

Rod Seals

RST

TRIADA
TECHNOLOGIES

#SealingExcellence




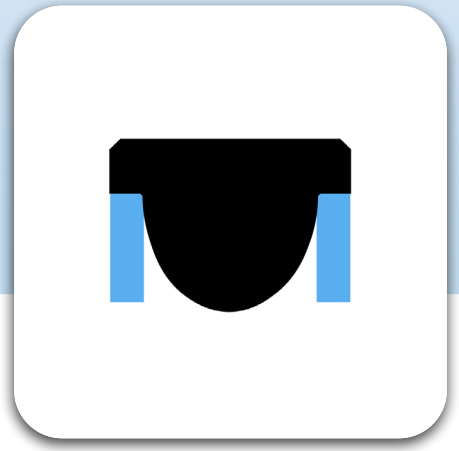

Description

The RST is a simple Rod Seal, which is easy to assemble and finds application in light duty cylinders. It consists of a TRIAFLEX® (NBR) elastomer which acts as a main sealing element and it is supported by the two Back-up rings made of TRIAMIDE® (POM), this helps in high extrusion resistance.

Diameter Range	Ø14.00 – Ø112.00
Standard material	TRIAMIDE® T485 (POM) with Energiser in TRIAFLEX® T571(NBR 70)
Temperature(°C)	- 35 °C to 110 °C
Speed	≤ 0.50 m/s
Fluids	Mineral oils (for other media please check with TRIADA® Application Engineering)
Pressure	≤ 350 bar

Reciprocating · Oscillating · Rotary · Helix · Static · Single Acting · Double Acting

Material Details

Wear Ring Material	Seal Material Code	Elastomer Material	Elastomer Material / Code
TRIAMIDE® POM	T485	TRIAFLEX® NBR	N (T571)

Nomenclature

Part No	RST	1016	1109	071	T485	N
	Seal profile	Rod Dia x 10	Groove Dia x 10	Groove Width x 10	Seal Material Code	O-Ring Material Code

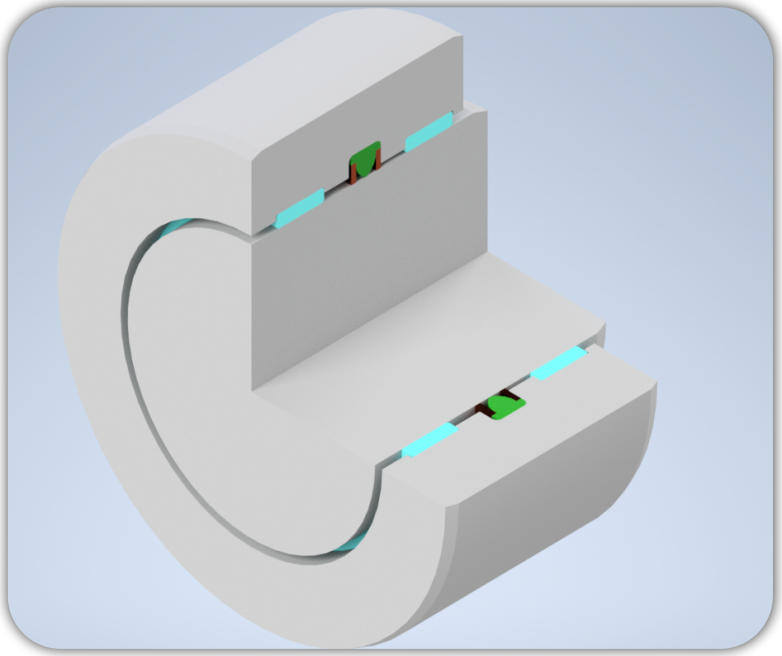

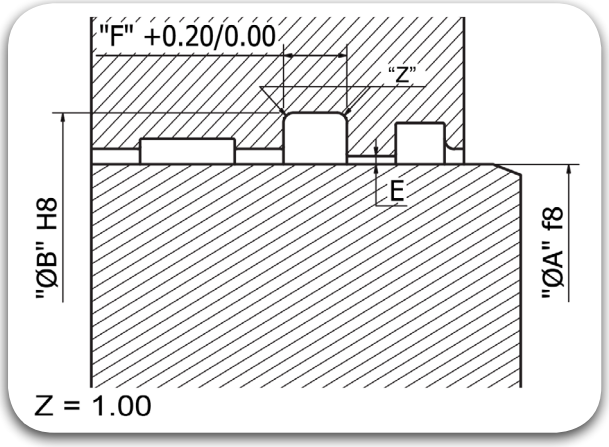

14.29

Part No	RST 0142 0204 047				
Groove Dimension	ØA	x	ØB	x	F
	14.29		20.40		4.70

15.88

Part No	RST 0158 0220 047				
Groove Dimension	ØA	x	ØB	x	F
	15.88		22.00		4.70

17.46

Part No	RST 0174 0235 047				
Groove Dimension	ØA	x	ØB	x	F
	17.46		23.57		4.70

19.05

Part No	RST 0190 0251 047				
Groove Dimension	ØA	x	ØB	x	F
	19.05		25.15		4.70

22.23

Part No	RST 0222 0283 047				
Groove Dimension	ØA	x	ØB	x	F
	22.23		28.32		4.70

25.40

Part No	RST 0254 0315 047				
Groove Dimension	ØA	x	ØB	x	F
	25.40		31.50		4.70

31.75

Part No	RST 0317 0378 047				
Groove Dimension	ØA	x	ØB	x	F
	31.75		37.85		4.70

34.93

Part No	RST 0349 0410 047				
Groove Dimension	ØA	x	ØB	x	F
	34.93		41.02		4.70

38.10

Part No	RST 0381 0442 047				
Groove Dimension	ØA	x	ØB	x	F
	38.10		44.20		4.70

41.28

Part No	RST 0412 0506 071				
Groove Dimension	ØA	x	ØB	x	F
	41.28		50.65		7.11

44.45

Part No	RST 0444 0538 071				
Groove Dimension	ØA	x	ØB	x	F
	44.45		53.82		7.11

50.80

Part No	RST 0508 0601 071				
Groove Dimension	ØA	x	ØB	x	F
	50.80		60.17		7.11

57.15

Part No	RST 0571 0665 071				
Groove Dimension	ØA	x	ØB	x	F
	57.15		66.52		7.11

63.50

Part No	RST 0635 0728 071					
Groove Dimension	ØA	x	ØB	x	F	
	63.50		72.87		7.11	

69.85

Part No	RST 0698 0792 071					
Groove Dimension	ØA	x	ØB	x	F	
	69.85		79.22		7.11	

76.20

Part No	RST 0762 0855 071					
Groove Dimension	ØA	x	ØB	x	F	
	76.20		85.52		7.11	

88.90

Part No	RST 0889 0982 071					
Groove Dimension	ØA	x	ØB	x	F	
	88.90		98.22		7.11	

101.60

Part No	RST 1016 1109 071					
Groove Dimension	ØA	x	ØB	x	F	
	101.60		110.92		7.11	

111.13

Part No	RST 1111 1204 071					
Groove Dimension	ØA	x	ØB	x	F	
	111.13		120.45		7.11	

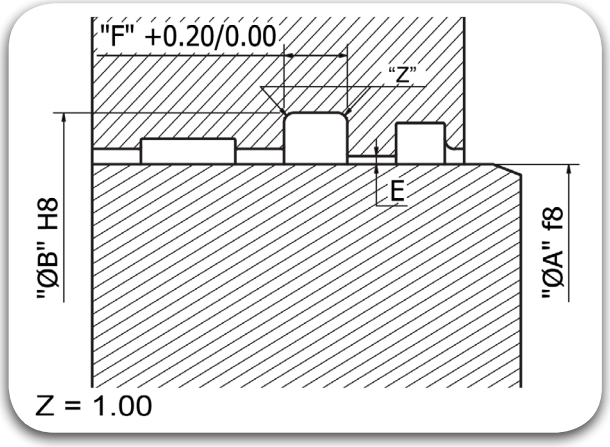

Rod Seals

RHC

TRIADA
TECHNOLOGIES

#SealingExcellence




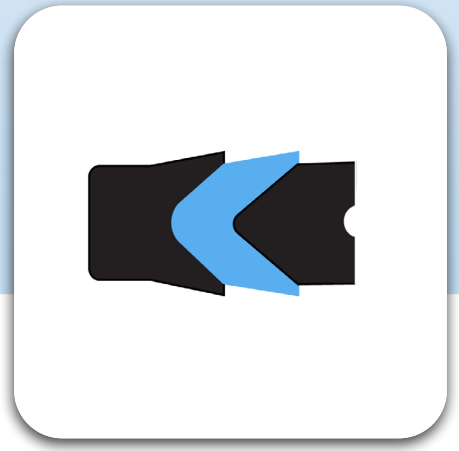

Description

RHC Seal is a single acting piston seal consists of a rugged central element in TRIAFLEX® (NBR) with fabric reinforcement, performing the main sealing function and to avoid the extrusion it is again supported by cotton fabric reinforced TRIAFLEX® Ring. To ensure a uniform preload of the seal the energizer made of TRIAMIDE® (POM) is being used at the front.

Diameter Range	Ø10.00 – Ø500.00
Standard material	V-Ring is of TRIAFLEX® T571(NBR), Spreader Ring is of TRIAFLEX® T543(compounded with cotton fabric), Base Ring is TRIAMIDE® T485(POM).
Temperature(°C)	-40ºC to 200ºC (Based on Elastomer Material)
Speed	≤ 0.50 m/s
Fluids	Hydraulic fluids (Mineral Oil based) depending on Seal Compounds selected.
Pressure	< 400 bar

Reciprocating | Oscillating | Rotary | Helix | Static | Single Acting | Double Acting

Material Details

V-Ring Material	Material Code	Spreader Ring Material / Code	Base Ring Material / Code
TRIAFLEX® T571 NBR 70	CXN	TRIAFLEX® - compounded with cotton fabric (T543)	TRIAMIDE® POM (T485)
TRIAFLEX® T675 FKM 70	CXF		

Nomenclature

Part No	RHC	1000	1150	253	CXN
	Seal profile	Rod Dia x 10	Groove Dia x 10	Groove Width x 10	Seal Material Code

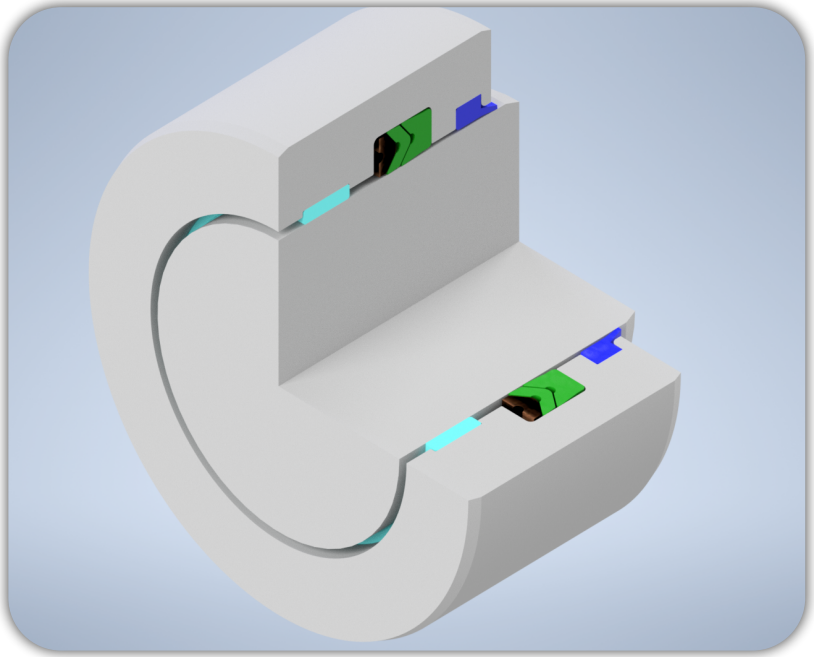

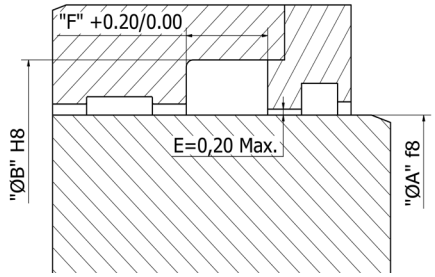

10.00

Part No	RHC 0100 0200 110 CX				
Groove Dimension	ØA	x	ØB	x	F
	10.00		20.00		11.00

12.00

Part No	RHC 0120 0250 143 CX				
Groove Dimension	ØA	x	ØB	x	F
	12.00		25.00		14.32

12.70

Part No	RHC 0127 0254 190 CX				
Groove Dimension	ØA	x	ØB	x	F
	12.70		25.40		19.05

16.00

Part No	RHC 0160 0290 143 CX				
Groove Dimension	ØA	x	ØB	x	F
	16.00		29.00		14.32

18.00

Part No	RHC 0180 0310 143 CX				
Groove Dimension	ØA	x	ØB	x	F
	18.00		31.00		14.32

20.00

Part No	RHC 0200 0300 215 CX				
Groove Dimension	ØA	x	ØB	x	F
	20.00		30.00		21.50

20.00

Part No	RHC 0200 0315 175 CX				
Groove Dimension	ØA	x	ØB	x	F
	20.00		31.50		17.50

20.00

Part No	RHC 0200 0320 182 CX				
Groove Dimension	ØA	x	ØB	x	F
	20.00		32.00		18.20

20.00

Part No	RHC 0200 0330 143 CX				
Groove Dimension	ØA	x	ØB	x	F
	20.00		33.00		14.32

20.00

Part No	RHC 0200 0360 240 CX				
Groove Dimension	ØA	x	ØB	x	F
	20.00		36.00		24.00

22.00

Part No	RHC 0220 0320 181 CX				
Groove Dimension	ØA	x	ØB	x	F
	22.00		32.00		18.13

25.00

Part No	RHC 0250 0350 173 CX				
Groove Dimension	ØA	x	ØB	x	F
	25.00		35.00		17.30

25.00

Part No	RHC 0250 0400 198 CX				
Groove Dimension	ØA	x	ØB	x	F
	25.00		40.00		19.84

25.00

Part No	RHC 0250 0420 254 CX					
Groove Dimension	ØA	x	ØB	x	F	
	25.00		42.00		25.40	

25.00

Part No	RHC 0250 0450 254 CX					
Groove Dimension	ØA	x	ØB	x	F	
	25.00		45.00		25.40	

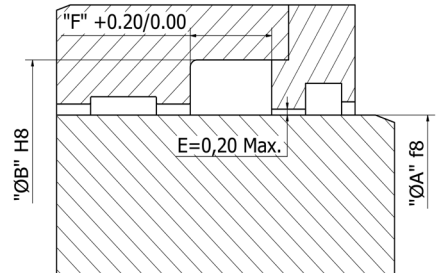

25.40

Part No	RHC 0254 0381 194 CX					
Groove Dimension	ØA	x	ØB	x	F	
	25.40		38.10		19.45	

26.00

Part No	RHC 0260 0450 293 CX					
Groove Dimension	ØA	x	ØB	x	F	
	26.00		45.00		29.37	

28.00

Part No	RHC 0280 0400 170 CX					
Groove Dimension	ØA	x	ØB	x	F	
	28.00		40.00		17.00	

28.57

Part No	RHC 0285 0412 198 CX					
Groove Dimension	ØA	x	ØB	x	F	
	28.57		41.27		19.84	

30.00

Part No	RHC 0300 0400 218 CX					
Groove Dimension	ØA	x	ØB	x	F	
	30.00		40.00		21.80	

30.00

Part No	RHC 0300 0420 200 CX					
Groove Dimension	ØA	x	ØB	x	F	
	30.00		42.00		20.00	

30.00

Part No	RHC 0300 0450 222 CX					
Groove Dimension	ØA	x	ØB	x	F	
	30.00		45.00		22.20	

30.00

Part No	RHC 0300 0500 293 CX					
Groove Dimension	ØA	x	ØB	x	F	
	30.00		50.00		29.37	

31.75

Part No	RHC 0317 0444 190 CX					
Groove Dimension	ØA	x	ØB	x	F	
	31.75		44.45		19.05	

32.00

Part No	RHC 0320 0420 173 CX					
Groove Dimension	ØA	x	ØB	x	F	
	32.00		42.00		17.30	

32.00

Part No	RHC 0320 0480 176 CX					
Groove Dimension	ØA	x	ØB	x	F	
	32.00		48.00		17.63	

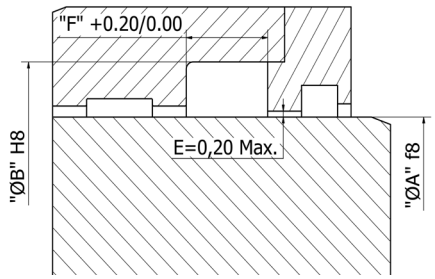

34.92

Part No	RHC 0349 0508 242 CX				
Groove Dimension	ØA	x	ØB	x	F
	34.92		50.80		24.21

35.00

Part No	RHC 0350 0450 217 CX				
Groove Dimension	ØA	x	ØB	x	F
	35.00		45.00		21.78

35.00

Part No	RHC 0350 0500 225 CX				
Groove Dimension	ØA	x	ØB	x	F
	35.00		50.00		22.50

36.00

Part No	RHC 0360 0510 240 CX				
Groove Dimension	ØA	x	ØB	x	F
	36.00		51.00		24.00

36.00

Part No	RHC 0360 0520 176 CX				
Groove Dimension	ØA	x	ØB	x	F
	36.00		52.00		17.60

38.00

Part No	RHC 0380 0550 280 CX				
Groove Dimension	ØA	x	ØB	x	F
	38.00		55.00		28.00

38.10

Part No	RHC 0381 0508 194 CX				
Groove Dimension	ØA	x	ØB	x	F
	38.10		50.80		19.45

38.10

Part No	RHC 0381 0539 252 CX				
Groove Dimension	ØA	x	ØB	x	F
	38.10		53.97		25.27

38.10

Part No	RHC 0381 0539 277 CX				
Groove Dimension	ØA	x	ØB	x	F
	38.10		53.97		27.78

38.10

Part No	RHC 0381 0571 287 CX				
Groove Dimension	ØA	x	ØB	x	F
	38.10		57.15		28.70

39.00

Part No	RHC 0390 0550 254 CX				
Groove Dimension	ØA	x	ØB	x	F
	39.00		55.00		25.40

40.00

Part No	RHC 0400 0500 173 CX				
Groove Dimension	ØA	x	ØB	x	F
	40.00		50.00		17.30

40.00

Part No	RHC 0400 0550 226 CX				
Groove Dimension	ØA	x	ØB	x	F
	40.00		55.00		22.62

40.00

Part No	RHC 0400 0550 226 CX		
Groove Dimension	ØA	ØB	F
	40.00	55.00	22.62

40.00

Part No	RHC 0400 0550 261 CX		
Groove Dimension	ØA	ØB	F
	40.00	55.00	26.19

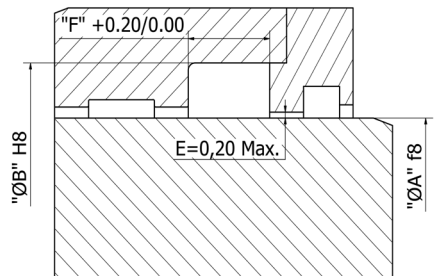

40.00

Part No	RHC 0400 0560 176 CX		
Groove Dimension	ØA	ØB	F
	40.00	56.00	17.63

40.00

Part No	RHC 0400 0600 300 CX		
Groove Dimension	ØA	ØB	F
	40.00	60.00	30.00

40.00

Part No	RHC 0400 0650 357 CX		
Groove Dimension	ØA	ØB	F
	40.00	65.00	35.72

44.45

Part No	RHC 0444 0571 218 CX		
Groove Dimension	ØA	ØB	F
	44.45	57.15	21.83

44.45

Part No	RHC 0444 0603 278 CX		
Groove Dimension	ØA	ØB	F
	44.45	60.32	27.80

45.00

Part No	RHC 0450 0550 175 CX		
Groove Dimension	ØA	ØB	F
	45.00	55.00	17.50

45.00

Part No	RHC 0450 0600 222 CX		
Groove Dimension	ØA	ØB	F
	45.00	60.00	22.22

45.00

Part No	RHC 0450 0650 280 CX		
Groove Dimension	ØA	ØB	F
	45.00	65.00	28.00

48.00

Part No	RHC 0480 0600 250 CX		
Groove Dimension	ØA	ØB	F
	48.00	60.00	25.00

48.00

Part No	RHC 0480 0620 222 CX		
Groove Dimension	ØA	ØB	F
	48.00	62.00	22.22

50.00

Part No	RHC 0500 0650 246 CX		
Groove Dimension	ØA	ØB	F
	50.00	65.00	24.60

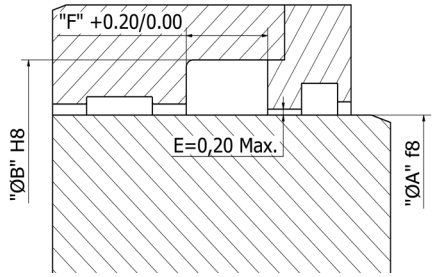

50.00

Part No	RHC 0500 0650 260 CX				
Groove Dimension	ØA	x	ØB	x	F
	50.00		65.00		26.00

50.00

Part No	RHC 0500 0700 219 CX				
Groove Dimension	ØA	x	ØB	x	F
	50.00		70.00		21.94

50.00

Part No	RHC 0500 0700 300 CX				
Groove Dimension	ØA	x	ØB	x	F
	50.00		70.00		30.00

50.00

Part No	RHC 0500 0700 300 CX				
Groove Dimension	ØA	x	ØB	x	F
	50.00		70.00		30.00

50.80

Part No	RHC 0508 0635 198 CX				
Groove Dimension	ØA	x	ØB	x	F
	50.80		63.50		19.84

50.80

Part No	RHC 0508 0666 230 CX				
Groove Dimension	ØA	x	ØB	x	F
	50.80		66.67		23.00

50.80

Part No	RHC 0508 0666 252 CX				
Groove Dimension	ØA	x	ØB	x	F
	50.80		66.67		25.27

50.80

Part No	RHC 0508 0698 335 CX				
Groove Dimension	ØA	x	ØB	x	F
	50.80		69.85		33.50

51.00

Part No	RHC 0510 0690 280 CX				
Groove Dimension	ØA	x	ØB	x	F
	51.00		69.00		28.00

52.00

Part No	RHC 0520 0720 325 CX				
Groove Dimension	ØA	x	ØB	x	F
	52.00		72.00		32.50

53.97

Part No	RHC 0539 0635 166 CX				
Groove Dimension	ØA	x	ØB	x	F
	53.97		63.50		16.67

53.97

Part No	RHC 0539 0698 252 CX				
Groove Dimension	ØA	x	ØB	x	F
	53.97		69.85		25.27

55.00

Part No	RHC 0550 0670 250 CX				
Groove Dimension	ØA	x	ØB	x	F
	55.00		67.00		25.00

55.00

Part No	RHC 0550 0700 265 CX		
Groove Dimension	ØA	ØB	F
	55.00	70.00	26.50

55.00

Part No	RHC 0550 0750 300 CX		
Groove Dimension	ØA	ØB	F
	55.00	75.00	30.00

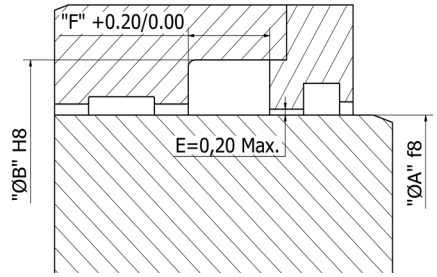

55.00

Part No	RHC 0550 0750 385 CX		
Groove Dimension	ØA	ØB	F
	55.00	75.00	38.50

56.00

Part No	RHC 0560 0710 172 CX		
Groove Dimension	ØA	ØB	F
	56.00	71.00	17.20

56.00

Part No	RHC 0560 0760 185 CX		
Groove Dimension	ØA	ØB	F
	56.00	76.00	18.50

56.00

Part No	RHC 0560 0760 219 CX		
Groove Dimension	ØA	ØB	F
	56.00	76.00	21.95

56.00

Part No	RHC 0560 0760 334 CX		
Groove Dimension	ØA	ØB	F
	56.00	76.00	33.40

57.15

Part No	RHC 0571 0698 190 CX		
Groove Dimension	ØA	ØB	F
	57.15	69.85	19.05

57.15

Part No	RHC 0571 0730 277 CX		
Groove Dimension	ØA	ØB	F
	57.15	73.02	27.78

57.15

Part No	RHC 0571 0762 325 CX		
Groove Dimension	ØA	ØB	F
	57.15	76.20	32.54

60.00

Part No	RHC 0600 0750 190 CX		
Groove Dimension	ØA	ØB	F
	60.00	75.00	19.00

60.00

Part No	RHC 0600 0760 290 CX		
Groove Dimension	ØA	ØB	F
	60.00	76.00	29.00

60.00

Part No	RHC 0600 0770 270 CX		
Groove Dimension	ØA	ØB	F
	60.00	77.00	27.00

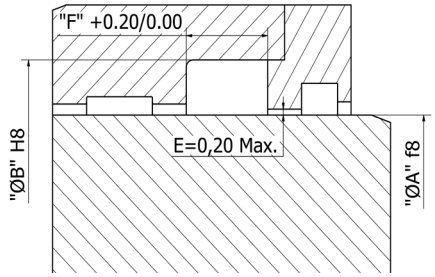

60.00

Part No	RHC 0600 0800 321 CX				
Groove Dimension	ØA	x	ØB	x	F
	60.00		80.00		32.15

63.00

Part No	RHC 0630 0830 219 CX				
Groove Dimension	ØA	x	ØB	x	F
	63.00		83.00		21.94

63.50

Part No	RHC 0635 0762 182 CX				
Groove Dimension	ØA	x	ØB	x	F
	63.50		76.20		18.25

63.50

Part No	RHC 0635 0793 238 CX				
Groove Dimension	ØA	x	ØB	x	F
	63.50		79.37		23.81

63.50

Part No	RHC 0635 0800 280 CX				
Groove Dimension	ØA	x	ØB	x	F
	63.50		80.00		28.00

63.50

Part No	RHC 0635 0825 265 CX				
Groove Dimension	ØA	x	ØB	x	F
	63.50		82.55		26.59

64.00

Part No	RHC 0640 0800 256 CX				
Groove Dimension	ØA	x	ØB	x	F
	64.00		80.00		25.60

65.00

Part No	RHC 0650 0770 210 CX				
Groove Dimension	ØA	x	ØB	x	F
	65.00		77.00		21.00

65.00

Part No	RHC 0650 0800 260 CX				
Groove Dimension	ØA	x	ØB	x	F
	65.00		80.00		26.00

65.00

Part No	RHC 0650 0850 290 CX				
Groove Dimension	ØA	x	ØB	x	F
	65.00		85.00		29.00

65.00

Part No	RHC 0650 0900 300 CX				
Groove Dimension	ØA	x	ØB	x	F
	65.00		90.00		30.00

69.85

Part No	RHC 0698 0889 254 CX				
Groove Dimension	ØA	x	ØB	x	F
	69.85		88.90		25.40

70.00

Part No	RHC 0700 0830 250 CX				
Groove Dimension	ØA	x	ØB	x	F
	70.00		83.00		25.00

70.00

Part No	RHC 0700 0850 280 CX		
Groove Dimension	ØA	ØB	F
	70.00	85.00	28.00

70.00

Part No	RHC 0700 0900 219 CX		
Groove Dimension	ØA	ØB	F
	70.00	90.00	21.95

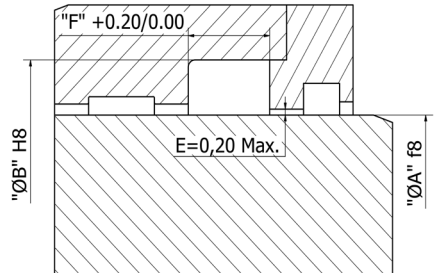

70.00

Part No	RHC 0700 0900 300 CX		
Groove Dimension	ØA	ØB	F
	70.00	90.00	30.00

70.00

Part No	RHC 0700 0900 300 CX		
Groove Dimension	ØA	ØB	F
	70.00	90.00	30.00

73.02

Part No	RHC 0730 0889 265 CX		
Groove Dimension	ØA	ØB	F
	73.02	88.90	26.58

75.00

Part No	RHC 0750 0900 225 CX		
Groove Dimension	ØA	ØB	F
	75.00	90.00	22.50

75.00

Part No	RHC 0750 0950 300 CX		
Groove Dimension	ØA	ØB	F
	75.00	95.00	30.00

75.00

Part No	RHC 0750 1000 300 CX		
Groove Dimension	ØA	ØB	F
	75.00	100.00	30.00

76.20

Part No	RHC 0762 0889 162 CX		
Groove Dimension	ØA	ØB	F
	76.20	88.90	16.27

76.50

Part No	RHC 0765 0965 465 CX		
Groove Dimension	ØA	ØB	F
	76.50	96.50	46.50

80.00

Part No	RHC 0800 0950 175 CX		
Groove Dimension	ØA	ØB	F
	80.00	95.00	17.50

80.00

Part No	RHC 0800 1000 300 CX		
Groove Dimension	ØA	ØB	F
	80.00	100.00	30.00

80.00

Part No	RHC 0800 1000 300 CX		
Groove Dimension	ØA	ØB	F
	80.00	100.00	30.00

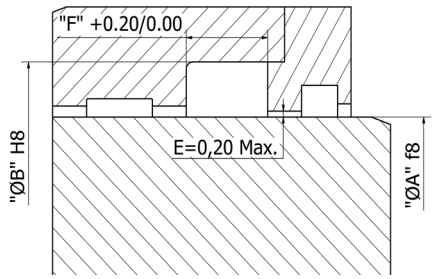

80.00

Part No	RHC 0800 1050 274 CX					
Groove Dimension	ØA	x	ØB	x	F	
	80.00		105.00		27.41	

82.55

Part No	RHC 0825 1016 289 CX					
Groove Dimension	ØA	x	ØB	x	F	
	82.55		101.60		28.97	

85.00

Part No	RHC 0850 1000 173 CX					
Groove Dimension	ØA	x	ØB	x	F	
	85.00		100.00		17.30	

85.00

Part No	RHC 0850 1050 300 CX					
Groove Dimension	ØA	x	ØB	x	F	
	85.00		105.00		30.00	

88.90

Part No	RHC 0889 1016 170 CX					
Groove Dimension	ØA	x	ØB	x	F	
	88.90		101.60		17.00	

88.90

Part No	RHC 0889 1079 333 CX					
Groove Dimension	ØA	x	ØB	x	F	
	88.90		107.95		33.33	

90.00

Part No	RHC 0900 1050 317 CX					
Groove Dimension	ØA	x	ØB	x	F	
	90.00		105.00		31.75	

90.00

Part No	RHC 0900 1100 250 CX					
Groove Dimension	ØA	x	ØB	x	F	
	90.00		110.00		25.00	

90.00

Part No	RHC 0900 1100 268 CX					
Groove Dimension	ØA	x	ØB	x	F	
	90.00		110.00		26.88	

90.00

Part No	RHC 0900 1150 274 CX					
Groove Dimension	ØA	x	ØB	x	F	
	90.00		115.00		27.41	

95.00

Part No	RHC 0950 1100 240 CX					
Groove Dimension	ØA	x	ØB	x	F	
	95.00		110.00		24.00	

95.00

Part No	RHC 0950 1200 410 CX					
Groove Dimension	ØA	x	ØB	x	F	
	95.00		120.00		41.00	

95.25

Part No	RHC 0952 1111 243 CX					
Groove Dimension	ØA	x	ØB	x	F	
	95.25		111.13		24.30	

98.42

Part No	RHC 0984 1238 369 CX					
Groove Dimension	ØA	x	ØB	x	F	
	98.42		123.82		36.96	

100.00

Part No	RHC 1000 1143 206 CX					
Groove Dimension	ØA	x	ØB	x	F	
	100.00		114.30		20.64	

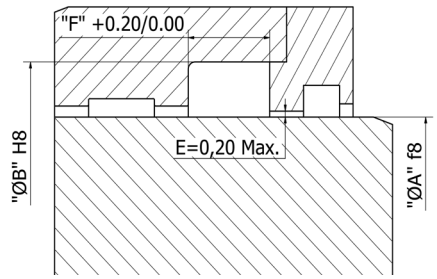

100.00

Part No	RHC 1000 1150 253 CX					
Groove Dimension	ØA	x	ØB	x	F	
	100.00		115.00		25.30	

100.00

Part No	RHC 1000 1200 280 CX					
Groove Dimension	ØA	x	ØB	x	F	
	100.00		120.00		28.00	

100.00

Part No	RHC 1000 1250 274 CX					
Groove Dimension	ØA	x	ØB	x	F	
	100.00		125.00		27.40	

100.00

Part No	RHC 1000 1250 369 CX					
Groove Dimension	ØA	x	ØB	x	F	
	100.00		125.00		36.90	

104.00

Part No	RHC 1040 1300 370 CX					
Groove Dimension	ØA	x	ØB	x	F	
	104.00		130.00		37.00	

105.00

Part No	RHC 1050 1200 250 CX					
Groove Dimension	ØA	x	ØB	x	F	
	105.00		120.00		25.00	

105.00

Part No	RHC 1050 1250 297 CX					
Groove Dimension	ØA	x	ØB	x	F	
	105.00		125.00		29.76	

105.00

Part No	RHC 1050 1350 345 CX					
Groove Dimension	ØA	x	ØB	x	F	
	105.00		135.00		34.50	

110.00

Part No	RHC 1100 1300 300 CX					
Groove Dimension	ØA	x	ØB	x	F	
	110.00		130.00		30.00	

110.00

Part No	RHC 1100 1320 365 CX					
Groove Dimension	ØA	x	ØB	x	F	
	110.00		132.00		36.50	

110.00

Part No	RHC 1100 1350 415 CX					
Groove Dimension	ØA	x	ØB	x	F	
	110.00		135.00		41.50	

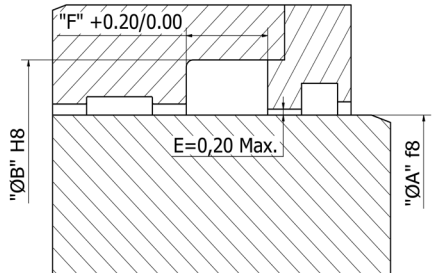

110.00

Part No	RHC 1100 1400 412 CX					
Groove Dimension	ØA	x	ØB	x	F	
	110.00		140.00		41.20	

111.12

Part No	RHC 1111 1365 388 CX					
Groove Dimension	ØA	x	ØB	x	F	
	111.12		136.52		38.89	

114.00

Part No	RHC 1140 1300 258 CX					
Groove Dimension	ØA	x	ØB	x	F	
	114.00		130.00		25.80	

114.30

Part No	RHC 1143 1270 184 CX					
Groove Dimension	ØA	x	ØB	x	F	
	114.30		127.00		18.41	

114.30

Part No	RHC 1143 1333 281 CX					
Groove Dimension	ØA	x	ØB	x	F	
	114.30		133.35		28.18	

115.00

Part No	RHC 1150 1300 254 CX					
Groove Dimension	ØA	x	ØB	x	F	
	115.00		130.00		25.49	

115.00

Part No	RHC 1150 1400 371 CX					
Groove Dimension	ØA	x	ØB	x	F	
	115.00		140.00		37.12	

117.47

Part No	RHC 1174 1428 361 CX					
Groove Dimension	ØA	x	ØB	x	F	
	117.47		142.87		36.10	

120.00

Part No	RHC 1200 1400 300 CX					
Groove Dimension	ØA	x	ØB	x	F	
	120.00		140.00		30.00	

120.00

Part No	RHC 1200 1400 300 CX					
Groove Dimension	ØA	x	ØB	x	F	
	120.00		140.00		30.00	

120.00

Part No	RHC 1200 1450 395 CX					
Groove Dimension	ØA	x	ØB	x	F	
	120.00		145.00		39.50	

125.00

Part No	RHC 1250 1450 296 CX					
Groove Dimension	ØA	x	ØB	x	F	
	125.00		145.00		29.62	

125.00

Part No	RHC 1250 1500 274 CX					
Groove Dimension	ØA	x	ØB	x	F	
	125.00		150.00		27.40	

125.00

Part No	RHC 1250 1550 345 CX		
Groove Dimension	ØA	ØB	F
	125.00	155.00	34.50

130.00

Part No	RHC 1300 1500 297 CX		
Groove Dimension	ØA	ØB	F
	130.00	150.00	29.76

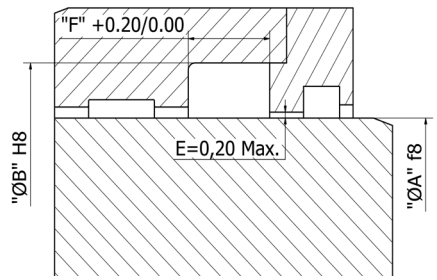

130.00

Part No	RHC 1300 1550 400 CX		
Groove Dimension	ØA	ØB	F
	130.00	155.00	40.00

130.00

Part No	RHC 1300 1600 415 CX		
Groove Dimension	ØA	ØB	F
	130.00	160.00	41.50

135.00

Part No	RHC 1350 1550 305 CX		
Groove Dimension	ØA	ØB	F
	135.00	155.00	30.55

135.00

Part No	RHC 1350 1600 385 CX		
Groove Dimension	ØA	ØB	F
	135.00	160.00	38.50

140.00

Part No	RHC 1400 1600 285 CX		
Groove Dimension	ØA	ØB	F
	140.00	160.00	28.50

140.00

Part No	RHC 1400 1650 419 CX		
Groove Dimension	ØA	ØB	F
	140.00	165.00	41.95

140.00

Part No	RHC 1400 1700 329 CX		
Groove Dimension	ØA	ØB	F
	140.00	170.00	32.97

145.00

Part No	RHC 1450 1700 381 CX		
Groove Dimension	ØA	ØB	F
	145.00	170.00	38.10

146.05

Part No	RHC 1460 1714 388 CX		
Groove Dimension	ØA	ØB	F
	146.05	171.45	38.89

150.00

Part No	RHC 1500 1700 305 CX		
Groove Dimension	ØA	ØB	F
	150.00	170.00	30.56

150.00

Part No	RHC 1500 1800 400 CX		
Groove Dimension	ØA	ØB	F
	150.00	180.00	40.00

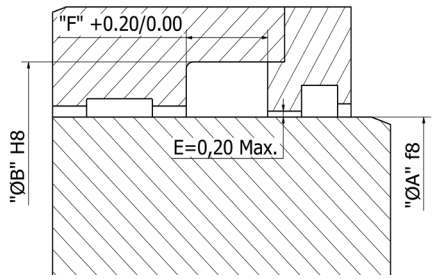

152.40

Part No	RHC 1524 1778 333 CX					
Groove Dimension	ØA	x	ØB	x	F	
	152.40		177.80		33.34	

154.00

Part No	RHC 1540 1750 294 CX					
Groove Dimension	ØA	x	ØB	x	F	
	154.00		175.00		29.44	

160.00

Part No	RHC 1600 1800 300 CX					
Groove Dimension	ØA	x	ØB	x	F	
	160.00		180.00		30.00	

160.00

Part No	RHC 1600 1900 329 CX					
Groove Dimension	ØA	x	ØB	x	F	
	160.00		190.00		32.97	

170.00

Part No	RHC 1700 1950 375 CX					
Groove Dimension	ØA	x	ØB	x	F	
	170.00		195.00		37.50	

170.00

Part No	RHC 1700 2000 500 CX					
Groove Dimension	ØA	x	ØB	x	F	
	170.00		200.00		50.00	

171.40

Part No	RHC 1714 1873 242 CX					
Groove Dimension	ØA	x	ØB	x	F	
	171.40		187.30		24.20	

175.00

Part No	RHC 1750 1900 250 CX					
Groove Dimension	ØA	x	ØB	x	F	
	175.00		190.00		25.00	

175.00

Part No	RHC 1750 2000 420 CX					
Groove Dimension	ØA	x	ØB	x	F	
	175.00		200.00		42.00	

177.80

Part No	RHC 1778 2032 325 CX					
Groove Dimension	ØA	x	ØB	x	F	
	177.80		203.20		32.54	

187.32

Part No	RHC 1873 2000 217 CX					
Groove Dimension	ØA	x	ØB	x	F	
	187.32		200.00		21.74	

190.00

Part No	RHC 1900 2200 300 CX					
Groove Dimension	ØA	x	ØB	x	F	
	190.00		220.00		50.50	

200.00

Part No	RHC 2000 2200 300 CX					
Groove Dimension	ØA	x	ØB	x	F	
	200.00		220.00		30.00	

200.00

Part No	RHC 2000 2300 329 CX					
Groove Dimension	ØA	x	ØB	x	F	
	200.00		230.00		32.97	

210.00

Part No	RHC 2100 2400 345 CX					
Groove Dimension	ØA	x	ØB	x	F	
	210.00		240.00		34.50	

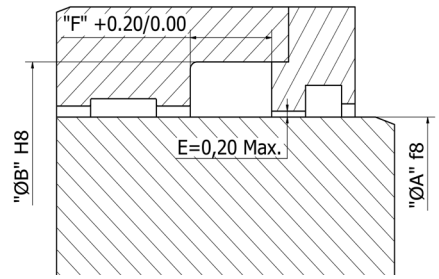

210.00

Part No	RHC 2100 2400 421 CX					
Groove Dimension	ØA	x	ØB	x	F	
	210.00		240.00		42.10	

220.00

Part No	RHC 2200 2500 520 CX					
Groove Dimension	ØA	x	ØB	x	F	
	220.00		250.00		52.00	

228.60

Part No	RHC 2286 2540 381 CX					
Groove Dimension	ØA	x	ØB	x	F	
	228.60		254.00		38.10	

230.00

Part No	RHC 2300 2600 505 CX					
Groove Dimension	ØA	x	ØB	x	F	
	230.00		260.00		50.50	

240.00

Part No	RHC 2400 2700 450 CX					
Groove Dimension	ØA	x	ØB	x	F	
	240.00		270.00		45.00	

250.00

Part No	RHC 2500 2800 400 CX					
Groove Dimension	ØA	x	ØB	x	F	
	250.00		280.00		40.00	

250.00

Part No	RHC 2500 2800 505 CX					
Groove Dimension	ØA	x	ØB	x	F	
	250.00		280.00		50.50	

250.00

Part No	RHC 2500 2800 600 CX					
Groove Dimension	ØA	x	ØB	x	F	
	250.00		280.00		60.00	

260.00

Part No	RHC 2600 2900 515 CX					
Groove Dimension	ØA	x	ØB	x	F	
	260.00		290.00		51.50	

260.00

Part No	RHC 2600 3000 490 CX					
Groove Dimension	ØA	x	ØB	x	F	
	260.00		300.00		49.00	

270.00

Part No	RHC 2700 3000 460 CX					
Groove Dimension	ØA	x	ØB	x	F	
	270.00		300.00		46.00	

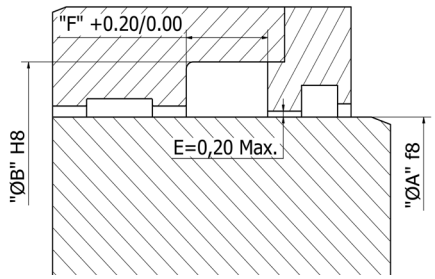

280.00

Part No	RHC 2800 3100 505 CX					
Groove Dimension	ØA	x	ØB	x	F	
	280.00		310.00		50.50	

280.00

Part No	RHC 2800 3150 384 CX					
Groove Dimension	ØA	x	ØB	x	F	
	280.00		315.00		38.45	

280.00

Part No	RHC 2800 3200 600 CX					
Groove Dimension	ØA	x	ØB	x	F	
	280.00		320.00		60.00	

290.00

Part No	RHC 2900 3200 508 CX					
Groove Dimension	ØA	x	ØB	x	F	
	290.00		320.00		50.80	

300.00

Part No	RHC 3000 3200 320 CX					
Groove Dimension	ØA	x	ØB	x	F	
	300.00		320.00		32.00	

300.00

Part No	RHC 3000 3300 520 CX					
Groove Dimension	ØA	x	ØB	x	F	
	300.00		330.00		52.00	

315.00

Part No	RHC 3150 3450 538 CX					
Groove Dimension	ØA	x	ØB	x	F	
	315.00		345.00		53.80	

315.00

Part No	RHC 3150 3500 384 CX					
Groove Dimension	ØA	x	ØB	x	F	
	315.00		350.00		38.45	

320.00

Part No	RHC 3200 3500 492 CX					
Groove Dimension	ØA	x	ØB	x	F	
	320.00		350.00		49.20	

320.00

Part No	RHC 3200 3600 610 CX					
Groove Dimension	ØA	x	ØB	x	F	
	320.00		360.00		61.00	

320.00

Part No	RHC 3200 3650 550 CX					
Groove Dimension	ØA	x	ØB	x	F	
	320.00		365.00		55.00	

340.00

Part No	RHC 3400 3800 505 CX					
Groove Dimension	ØA	x	ØB	x	F	
	340.00		380.00		50.50	

350.00

Part No	RHC 3500 3900 505 CX					
Groove Dimension	ØA	x	ØB	x	F	
	350.00		390.00		50.50	

350.00

Part No	RHC 3500 3900 616 CX					
Groove Dimension	ØA	x	ØB	x	F	
	350.00		390.00		61.60	

360.00

Part No	RHC 3600 3900 390 CX					
Groove Dimension	ØA	x	ØB	x	F	
	360.00		390.00		39.00	

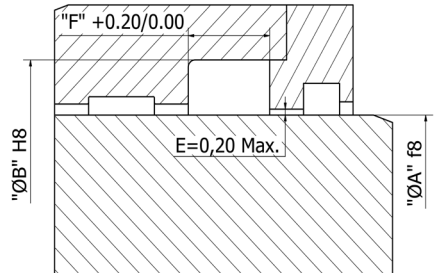

360.00

Part No	RHC 3600 4000 800 CX					
Groove Dimension	ØA	x	ØB	x	F	
	360.00		400.00		80.00	

380.00

Part No	RHC 3800 4200 610 CX					
Groove Dimension	ØA	x	ØB	x	F	
	380.00		420.00		61.00	

400.00

Part No	RHC 4000 4400 540 CX					
Groove Dimension	ØA	x	ØB	x	F	
	400.00		440.00		54.00	

400.00

Part No	RHC 4000 4400 655 CX					
Groove Dimension	ØA	x	ØB	x	F	
	400.00		440.00		65.50	

410.00

Part No	RHC 4100 4500 655 CX					
Groove Dimension	ØA	x	ØB	x	F	
	410.00		450.00		65.50	

420.00

Part No	RHC 4200 4600 540 CX					
Groove Dimension	ØA	x	ØB	x	F	
	420.00		460.00		54.00	

450.00

Part No	RHC 4500 5000 765 CX					
Groove Dimension	ØA	x	ØB	x	F	
	450.00		500.00		76.50	

460.00

Part No	RHC 4600 5000 534 CX					
Groove Dimension	ØA	x	ØB	x	F	
	460.00		500.00		53.40	

500.00

Part No	RHC 5000 5500 740 CX					
Groove Dimension	ØA	x	ØB	x	F	
	500.00		550.00		74.00	

Rod Seals

RSE

TRIADA
TECHNOLOGIES

#Sealing**Excellence**




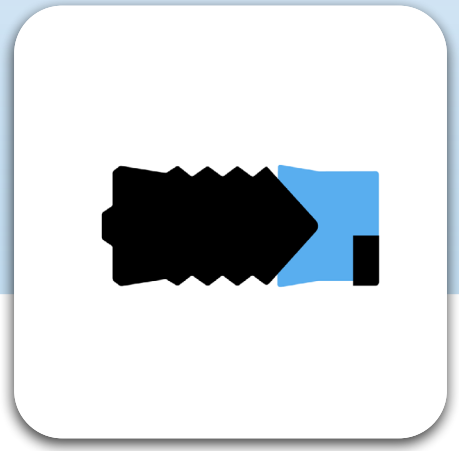

Description

A sturdy Rod Seal, which finds its usage in High Pressure Cylinders, as the materials used in its construction arrests any sort of extrusion possibilities. The RSE Seal is a single acting rod seal consist of a main sealing element TRIAFLEX® (NBR) elastomer with multiple lips to have a proper sealing and is supported by the rugged element in TRIAFLEX® with fabric reinforcement, performing the main sealing function and to avoid the extrusion it is again supported by TRIAMIDE® (POM) ring.

Diameter Range	Ø15.00 – Ø335.00
Standard material	TRIAFLEX® T571(NBR) Sealing Element with TRIATEX® T543(Fabric reinforced Nitrile) Support Ring and Anti-Extrusion Ring TRIAMIDE® T485 (POM).
Temperature(°C)	-30° C to 130° C
Speed	≤ 0.50 m/s
Fluids	Hydraulic fluids (Mineral Oil based) depending on Seal Compounds selected.
Pressure	< 700 bar

Reciprocating | Oscillating | Rotary | Helix | Static | Single Acting | Double Acting

Material Details

Seal Material	Seal Material Code	Support Ring Material / Code	Anti-Extrusion Ring Material / Code
TRIAFLEX® T571 NBR	CXN	TRIATEX® (Fabric reinforced Nitrile) (T543)	TRIAMIDE® POM (T485)

Nomenclature

Part No	RSE	1100	1300	325	CXN
	Seal profile	Rod Dia x 10	Groove Dia x 10	Groove Width x 10	Seal Material Code

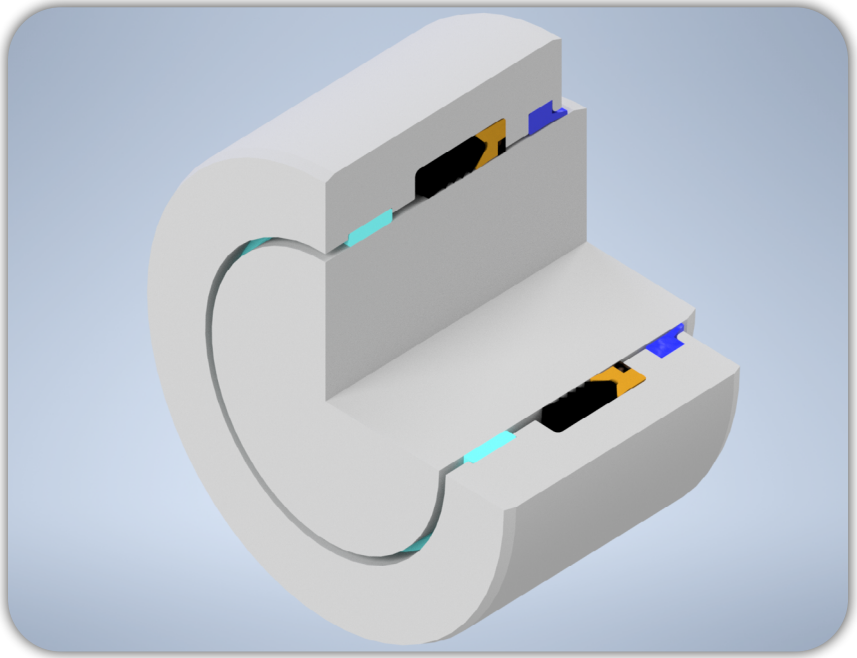

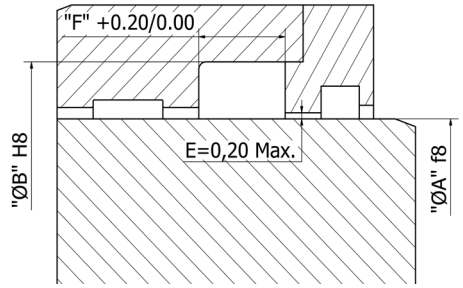

15.00

Part No	RSE 0150 0270 200 CX				
Groove Dimension	ØA	x	ØB	x	F
	15.00		27.00		20.00

20.00

Part No	RSE 0200 0330 200 CX				
Groove Dimension	ØA	x	ØB	x	F
	20.00		33.00		20.00

22.00

Part No	RSE 0220 0350 200 CX				
Groove Dimension	ØA	x	ØB	x	F
	22.00		35.00		20.00

25.00

Part No	RSE 0250 0380 200 CX				
Groove Dimension	ØA	x	ØB	x	F
	25.00		38.00		20.00

28.00

Part No	RSE 0280 0410 200 CX				
Groove Dimension	ØA	x	ØB	x	F
	28.00		41.00		20.00

30.00

Part No	RSE 0300 0430 200 CX				
Groove Dimension	ØA	x	ØB	x	F
	30.00		43.00		20.00

32.00

Part No	RSE 0320 0470 225 CX				
Groove Dimension	ØA	x	ØB	x	F
	32.00		47.00		22.50

35.00

Part No	RSE 0350 0450 256 CX				
Groove Dimension	ØA	x	ØB	x	F
	35.00		45.00		25.60

35.00

Part No	RSE 0350 0470 225 CX				
Groove Dimension	ØA	x	ØB	x	F
	35.00		47.00		22.50

35.00

Part No	RSE 0350 0500 225 CX				
Groove Dimension	ØA	x	ØB	x	F
	35.00		50.00		22.50

36.00

Part No	RSE 0360 0510 225 CX				
Groove Dimension	ØA	x	ØB	x	F
	36.00		51.00		22.50

38.10

Part No	RSE 0381 0508 239 CX				
Groove Dimension	ØA	x	ØB	x	F
	38.10		50.80		23.90

40.00

Part No	RSE 0400 0520 225 CX				
Groove Dimension	ØA	x	ØB	x	F
	40.00		52.00		22.50

40.00

Part No	RSE 0400 0550 226 CX					
Groove Dimension	ØA	x	ØB	x	F	
	40.00		55.00		22.60	

40.00

Part No	RSE 0400 0600 300 CX					
Groove Dimension	ØA	x	ØB	x	F	
	40.00		60.00		30.00	

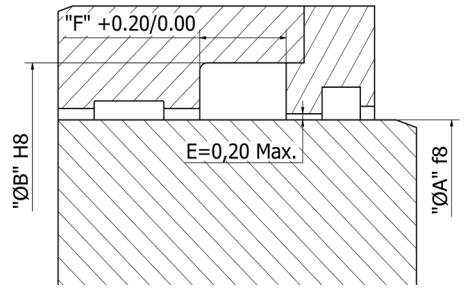

45.00

Part No	RSE 0450 0600 225 CX					
Groove Dimension	ØA	x	ØB	x	F	
	45.00		60.00		22.50	

45.00

Part No	RSE 0450 0650 280 CX					
Groove Dimension	ØA	x	ØB	x	F	
	45.00		65.00		28.00	

50.00

Part No	RSE 0500 0630 200 CX					
Groove Dimension	ØA	x	ØB	x	F	
	50.00		63.00		20.00	

50.00

Part No	RSE 0500 0650 245 CX					
Groove Dimension	ØA	x	ØB	x	F	
	50.00		65.00		24.50	

50.00

Part No	RSE 0500 0650 265 CX					
Groove Dimension	ØA	x	ØB	x	F	
	50.00		65.00		26.50	

50.00

Part No	RSE 0500 0650 225 CX					
Groove Dimension	ØA	x	ØB	x	F	
	50.00		65.00		22.50	

50.00

Part No	RSE 0500 0700 300 CX					
Groove Dimension	ØA	x	ØB	x	F	
	50.00		70.00		30.00	

50.00

Part No	RSE 0500 0700 319 CX					
Groove Dimension	ØA	x	ØB	x	F	
	50.00		70.00		31.90	

50.80

Part No	RSE 0508 0666 249 CX					
Groove Dimension	ØA	x	ØB	x	F	
	50.80		66.67		24.90	

55.00

Part No	RSE 0550 0700 250 CX					
Groove Dimension	ØA	x	ØB	x	F	
	55.00		70.00		25.00	

55.00

Part No	RSE 0550 0700 225 CX					
Groove Dimension	ØA	x	ØB	x	F	
	55.00		70.00		22.50	

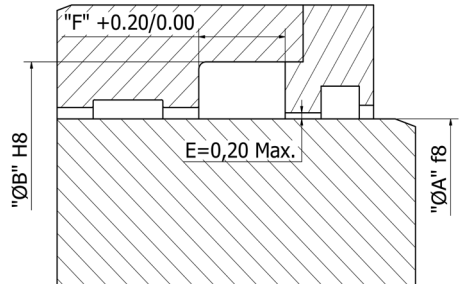

55.00

Part No	RSE 0550 0750 320 CX				
Groove Dimension	ØA	x	ØB	x	F
	55.00		75.00		32.00

55.00

Part No	RSE 0550 0750 300 CX				
Groove Dimension	ØA	x	ØB	x	F
	55.00		75.00		30.00

56.00

Part No	RSE 0560 0710 250 CX				
Groove Dimension	ØA	x	ØB	x	F
	56.00		71.00		25.00

56.00

Part No	RSE 0560 0760 280 CX				
Groove Dimension	ØA	x	ØB	x	F
	56.00		76.00		28.00

60.00

Part No	RSE 0600 0750 250 CX				
Groove Dimension	ØA	x	ØB	x	F
	60.00		75.00		25.00

60.00

Part No	RSE 0600 0750 225 CX				
Groove Dimension	ØA	x	ØB	x	F
	60.00		75.00		22.50

60.00

Part No	RSE 0600 0770 270 CX				
Groove Dimension	ØA	x	ØB	x	F
	60.00		77.00		27.00

60.00

Part No	RSE 0600 0800 349 CX				
Groove Dimension	ØA	x	ØB	x	F
	60.00		80.00		34.90

63.00

Part No	RSE 0630 0830 290 CX				
Groove Dimension	ØA	x	ØB	x	F
	63.00		83.00		29.00

63.00

Part No	RSE 0630 0830 270 CX				
Groove Dimension	ØA	x	ØB	x	F
	63.00		83.00		27.00

63.50

Part No	RSE 0635 0825 266 CX				
Groove Dimension	ØA	x	ØB	x	F
	63.50		82.55		26.60

65.00

Part No	RSE 0650 0850 290 CX				
Groove Dimension	ØA	x	ØB	x	F
	65.00		85.00		29.00

70.00

Part No	RSE 0700 0830 250 CX				
Groove Dimension	ØA	x	ØB	x	F
	70.00		83.00		25.00

70.00		ØA	ØB	F
Part No	RSE 0700 0850 225 CX			
Groove Dimension		70.00	85.00	22.50

70.00		ØA	ØB	F
Part No	RSE 0700 0850 250 CX			
Groove Dimension		70.00	85.00	25.00

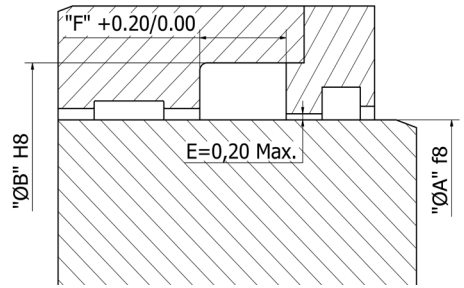

70.00		ØA	ØB	F
Part No	RSE 0700 0900 300 CX			
Groove Dimension		70.00	90.00	30.00

70.00		ØA	ØB	F
Part No	RSE 0700 0900 319 CX			
Groove Dimension		70.00	90.00	31.90

75.00		ØA	ØB	F
Part No	RSE 0750 0950 280 CX			
Groove Dimension		75.00	95.00	28.00

75.00		ØA	ØB	F
Part No	RSE 0750 0950 300 CX			
Groove Dimension		75.00	95.00	30.00

76.20		ØA	ØB	F
Part No	RSE 0762 0952 246 CX			
Groove Dimension		76.20	95.25	24.60

76.50		ØA	ØB	F
Part No	RSE 0765 0965 325 CX			
Groove Dimension		76.50	96.50	32.50

80.00		ØA	ØB	F
Part No	RSE 0800 1000 300 CX			
Groove Dimension		80.00	100.00	30.00

85.00		ØA	ØB	F
Part No	RSE 0850 0980 250 CX			
Groove Dimension		85.00	98.00	25.00

85.00		ØA	ØB	F
Part No	RSE 0850 1050 300 CX			
Groove Dimension		85.00	105.00	30.00

90.00		ØA	ØB	F
Part No	RSE 0900 1050 250 CX			
Groove Dimension		90.00	105.00	25.00

90.00		ØA	ØB	F
Part No	RSE 0900 1050 335 CX			
Groove Dimension		90.00	105.00	33.50

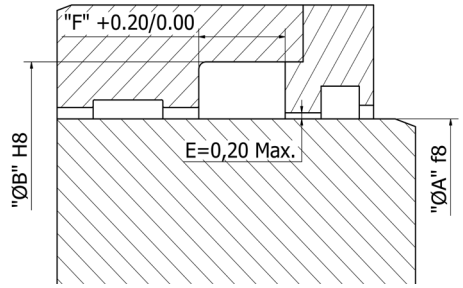

90.00

Part No	RSE 0900 1100 300 CX				
Groove Dimension	ØA	x	ØB	x	F
	90.00		110.00		30.00

90.00

Part No	RSE 0900 1100 325 CX				
Groove Dimension	ØA	x	ØB	x	F
	90.00		110.00		32.50

95.00

Part No	RSE 0950 1150 280 CX				
Groove Dimension	ØA	x	ØB	x	F
	95.00		115.00		28.00

100.00

Part No	RSE 1000 1143 242 CX				
Groove Dimension	ØA	x	ØB	x	F
	100.00		114.30		24.20

100.00

Part No	RSE 1000 1200 300 CX				
Groove Dimension	ØA	x	ØB	x	F
	100.00		120.00		30.00

105.00

Part No	RSE 1050 1180 250 CX				
Groove Dimension	ØA	x	ØB	x	F
	105.00		118.00		25.00

105.00

Part No	RSE 1050 1200 340 CX				
Groove Dimension	ØA	x	ØB	x	F
	105.00		120.00		34.00

110.00

Part No	RSE 1100 1300 325 CX				
Groove Dimension	ØA	x	ØB	x	F
	110.00		130.00		32.50

110.00

Part No	RSE 1100 1320 365 CX				
Groove Dimension	ØA	x	ØB	x	F
	110.00		132.00		36.50

115.00

Part No	RSE 1150 1300 300 CX				
Groove Dimension	ØA	x	ØB	x	F
	115.00		130.00		30.00

115.00

Part No	RSE 1150 1300 225 CX				
Groove Dimension	ØA	x	ØB	x	F
	115.00		130.00		22.50

120.00

Part No	RSE 1200 1350 225 CX				
Groove Dimension	ØA	x	ØB	x	F
	120.00		135.00		22.50

120.00

Part No	RSE 1200 1400 300 CX				
Groove Dimension	ØA	x	ØB	x	F
	120.00		140.00		30.00

125.00

Part No	RSE 1250 1450 296 CX		
Groove Dimension	ØA	ØB	F
	125.00	145.00	29.60

127.00

Part No	RSE 1270 1420 225 CX		
Groove Dimension	ØA	ØB	F
	127.00	142.00	22.50

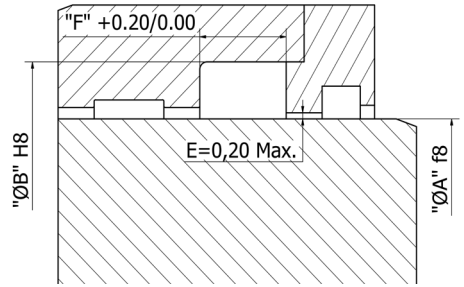

130.00

Part No	RSE 1300 1500 280 CX		
Groove Dimension	ØA	ØB	F
	130.00	150.00	28.00

135.00

Part No	RSE 1350 1550 280 CX		
Groove Dimension	ØA	ØB	F
	135.00	155.00	28.00

140.00

Part No	RSE 1400 1600 280 CX		
Groove Dimension	ØA	ØB	F
	140.00	160.00	28.00

145.00

Part No	RSE 1450 1650 280 CX		
Groove Dimension	ØA	ØB	F
	145.00	165.00	28.00

150.00

Part No	RSE 1500 1700 280 CX		
Groove Dimension	ØA	ØB	F
	150.00	170.00	28.00

155.00

Part No	RSE 1550 1750 280 CX		
Groove Dimension	ØA	ØB	F
	155.00	175.00	28.00

158.50

Part No	RSE 1585 1800 280 CX		
Groove Dimension	ØA	ØB	F
	158.50	180.00	28.00

160.00

Part No	RSE 1600 1800 280 CX		
Groove Dimension	ØA	ØB	F
	160.00	180.00	28.00

165.00

Part No	RSE 1650 1850 300 CX		
Groove Dimension	ØA	ØB	F
	165.00	185.00	30.00

170.00

Part No	RSE 1700 1950 350 CX		
Groove Dimension	ØA	ØB	F
	170.00	195.00	35.00

180.00

Part No	RSE 1800 2050 350 CX		
Groove Dimension	ØA	ØB	F
	180.00	205.00	35.00

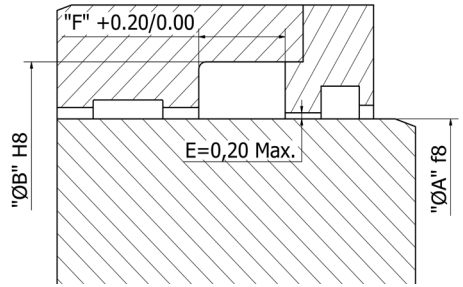

185.00

Part No	RSE 1850 2000 225 CX					
Groove Dimension	ØA	x	ØB	x	F	
	185.00		200.00		22.50	

185.00

Part No	RSE 1850 2100 350 CX					
Groove Dimension	ØA	x	ØB	x	F	
	185.00		210.00		35.00	

190.00

Part No	RSE 1900 2150 350 CX					
Groove Dimension	ØA	x	ØB	x	F	
	190.00		215.00		35.00	

200.00

Part No	RSE 2000 2250 350 CX					
Groove Dimension	ØA	x	ØB	x	F	
	200.00		225.00		35.00	

215.00

Part No	RSE 2150 2400 350 CX					
Groove Dimension	ØA	x	ØB	x	F	
	215.00		240.00		35.00	

220.00

Part No	RSE 2200 2450 350 CX					
Groove Dimension	ØA	x	ØB	x	F	
	220.00		245.00		35.00	

225.00

Part No	RSE 2250 2500 350 CX					
Groove Dimension	ØA	x	ØB	x	F	
	225.00		250.00		35.00	

230.00

Part No	RSE 2300 2550 350 CX					
Groove Dimension	ØA	x	ØB	x	F	
	230.00		255.00		35.00	

240.00

Part No	RSE 2400 2650 350 CX					
Groove Dimension	ØA	x	ØB	x	F	
	240.00		265.00		35.00	

250.00

Part No	RSE 2500 2750 350 CX					
Groove Dimension	ØA	x	ØB	x	F	
	250.00		275.00		35.00	

260.00

Part No	RSE 2600 2800 300 CX					
Groove Dimension	ØA	x	ØB	x	F	
	260.00		280.00		30.00	

265.00

Part No	RSE 2650 2900 350 CX					
Groove Dimension	ØA	x	ØB	x	F	
	265.00		290.00		35.00	

275.00

Part No	RSE 2750 3000 350 CX					
Groove Dimension	ØA	x	ØB	x	F	
	275.00		300.00		35.00	

280.00

Part No	RSE 2800 3050 350 CX				
Groove Dimension	ØA	x	ØB	x	F
	280.00		305.00		35.00

300.00

Part No	RSE 3000 3250 350 CX				
Groove Dimension	ØA	x	ØB	x	F
	300.00		325.00		35.00

335.00

Part No	RSE 3350 3600 350 CX				
Groove Dimension	ØA	x	ØB	x	F
	335.00		360.00		35.00

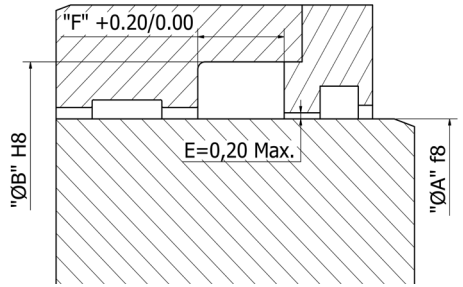

TRIADA
TECHNOLOGIES

Wiper Seals
Triada Sealing Guide

#SealingExcellence

TRIADA

Important Information

Utmost care has been taken in the preparation and completion of this guide, but still it is not guaranteed that this is devoid of any typographical or inadvertent errors or omissions. Hence, Triada shall not be responsible for the end user's reliance on such errors or omissions. Information or data in this guide which includes and not limited to product profiles, product features, specifications etc. may be amended or modified at the sole discretion of Triada Technologies India Pvt. Ltd. (TTIPL) without any notice or prior intimation.

TTIPL strongly urge its customers and associates to validate the products that are being offered, to ensure its suitability and performance, based on their applications, hardware & operating conditions, through their own analysis and testing.

DOC. NO.: TT/AE/CAT/FE/03-2023

Table of Content

1 Introduction to Wiper Seals

01 WRN C01 - C11
02 WPN C13 - C20
03 WRH C21 - C27
04 WDN C29 - C33
05 WDD C35 - C42
06 WMB C43 - C49
07 WGN C51 - C63
08 WRP C65 - C80
09 WPP C81 - C87
10 WDR C89 - C97
11 WDU C99 - C104
12 WPP C105 - C110
13 WED C111 - C119
14 WPW C121 - C128
15 WSP C129 - C141
16 WDL C143 - C148
17 WGP C149 - C154
18 WDC C155 - C163
19 WDE C165 - C174
20 WDF C175 - C185
21 WDT C187 - C196
22 WVN C197 - C201
23 WSS C203 - C209

Introduction to Wiper Seals

Wiper Seals

Wiper Seals have the role of protecting the entire Cylinder Sealing System a well as the media from any contaminants. It also acts as a snow scraper in applications where it shall be exposed to snow fall deposition. In certain designs, it also assist in the back pumping function of the Rod Seals, retaining the oil swept through the Rod Seal, between the Rod Seal as well as the inner lip of the Wiper Seal.

Wiper Seals or Scraper Seals are available in a multitude of designs and comes in two basic versions, Snap-in type or Metal encased rigid type. Of course, then there is the Single Lip and Double Lip versions, which are basically selected based on the profile of the Rod Seals. Assembling of the Snap-in type is rather easy, compared to the Metal encased seals, which mayor may not be retained by a circlip.

Triada® do have Wiper Seals with a Brass of Steel wiping lip, assisted by an elastomer wiping lip, placed behind this metal lip. Such wipers are used in situations where there are possibilities of heavy debris getting deposited on the Rod surface, which subsequently gets hard when dried up. The Elastomer or PU wiping lips may fail to block such hard debris from entering into the system and thus calls for an additional reinforcement, provided my way of such brass or steel lips.

Triada® offers a wide range of Wiper Seals, in various profiles, styles, materials which could be foud in the following pages. Additionally, please feel free to contact Triada® if you are unable to locate any specific profile that you are looking for, as this Catalogue indicates only the Standard of commonly used profile. As we constantly strive to improve the technology of sealing, it is quite natural that Triada® would have still many designs or material configurations, apart from the ones listed here.

Wiper Seals

WRN

TRIADA
TECHNOLOGIES

#Sealing**Excellence**






Description

The WRN Scraper is an easy to install snap in type Wiper Seal in TRIAFLEX® (NBR). The lip at the outer edge avoids the dust particles entering into the system for axially moving rods, thus eliminating the damage for other seals and internal components.

Diameter Range	Ø12.00 – Ø400.00 (Larger dia. on request)
Standard material	TRIAFLEX® T591 (NBR 90)
Temperature(°C)	- 30°C to 120°C
Speed	< 1.00 m/s
Fluids	Mineral Oils

Material Details

Seal Material	Seal Material / Code
TRIAFLEX®	NBR 90 T591
TRIAFLEX®	FKM 90 T691

Nomenclature

Part No	WRN	0120	0186	038	T591
	Seal profile	Rod Dia x 10	Groove Dia x 10	Groove Width x 10	Seal Material Code

Groove Details

Rod Diameter Range “ØA”	Mouth Diameter “ØC”
12.00 - 85.00	‘ØA’ + 3.00mm
85.00 - 180.00	‘ØA’ + 6.00mm
180.00 - 400.00	‘ØA’ + 10.00mm

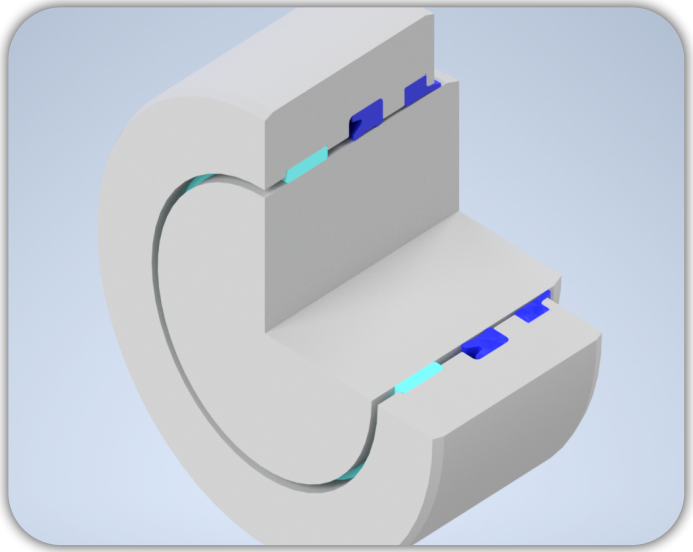

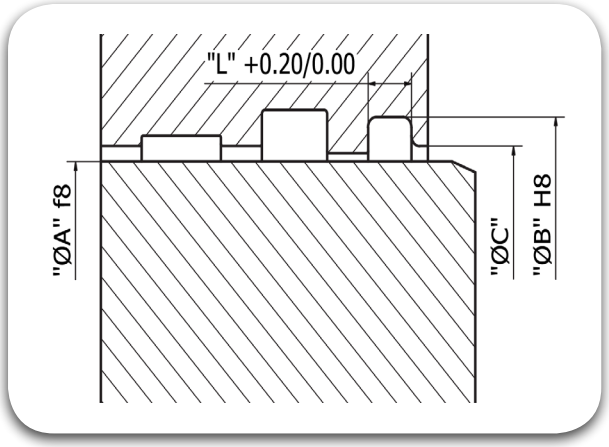

12.00

Part No	WRN 0120 0186 038				
Groove Dimension	ØA	x	ØB	x	L
	12.00		18.60		3.80

13.00

Part No	WRN 0130 0196 038				
Groove Dimension	ØA	x	ØB	x	L
	13.00		19.60		3.80

14.00

Part No	WRN 0140 0206 038				
Groove Dimension	ØA	x	ØB	x	L
	14.00		20.60		3.80

15.00

Part No	WRN 0150 0216 038				
Groove Dimension	ØA	x	ØB	x	L
	15.00		21.60		3.80

16.00

Part No	WRN 0160 0226 038				
Groove Dimension	ØA	x	ØB	x	L
	16.00		22.60		3.80

18.00

Part No	WRN 0180 0246 038				
Groove Dimension	ØA	x	ØB	x	L
	18.00		24.60		3.80

19.00

Part No	WRN 0190 0286 053				
Groove Dimension	ØA	x	ØB	x	L
	19.00		28.60		5.30

20.00

Part No	WRN 0200 0286 053				
Groove Dimension	ØA	x	ØB	x	L
	20.00		28.60		5.30

22.00

Part No	WRN 0220 0306 053				
Groove Dimension	ØA	x	ØB	x	L
	22.00		30.60		5.30

24.00

Part No	WRN 0240 0326 053				
Groove Dimension	ØA	x	ØB	x	L
	24.00		32.60		5.30

25.00

Part No	WRN 0250 0336 053				
Groove Dimension	ØA	x	ØB	x	L
	25.00		33.60		5.30

26.00

Part No	WRN 0260 0346 053				
Groove Dimension	ØA	x	ØB	x	L
	26.00		34.60		5.30

28.00

Part No	WRN 0280 0366 053				
Groove Dimension	ØA	x	ØB	x	L
	28.00		36.60		5.30

30.00

Part No	WRN 0300 0386 053					
Groove Dimension	ØA	x	ØB	x	L	
	30.00		38.60		5.30	

32.00

Part No	WRN 0320 0406 053					
Groove Dimension	ØA	x	ØB	x	L	
	32.00		40.60		5.30	

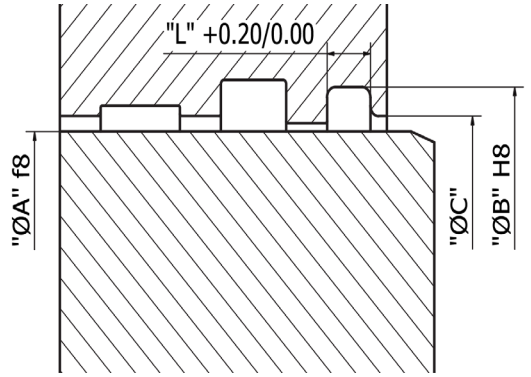

33.00

Part No	WRN 0330 0416 053					
Groove Dimension	ØA	x	ØB	x	L	
	33.00		41.60		5.30	

35.00

Part No	WRN 0350 0436 053					
Groove Dimension	ØA	x	ØB	x	L	
	35.00		43.60		5.30	

36.00

Part No	WRN 0360 0446 053					
Groove Dimension	ØA	x	ØB	x	L	
	36.00		44.60		5.30	

38.00

Part No	WRN 0380 0466 053					
Groove Dimension	ØA	x	ØB	x	L	
	38.00		46.60		5.30	

40.00

Part No	WRN 0400 0486 053					
Groove Dimension	ØA	x	ØB	x	L	
	40.00		48.60		5.30	

42.00

Part No	WRN 0420 0506 053					
Groove Dimension	ØA	x	ØB	x	L	
	42.00		50.60		5.30	

45.00

Part No	WRN 0450 0536 053					
Groove Dimension	ØA	x	ØB	x	L	
	45.00		53.60		5.30	

45.00

Part No	WRN 0450 0556 053					
Groove Dimension	ØA	x	ØB	x	L	
	45.00		55.60		5.30	

46.00

Part No	WRN 0460 0546 053					
Groove Dimension	ØA	x	ØB	x	L	
	46.00		54.60		5.30	

50.00

Part No	WRN 0500 0586 053					
Groove Dimension	ØA	x	ØB	x	L	
	50.00		58.60		5.30	

50.00

Part No	WRN 0500 0606 053					
Groove Dimension	ØA	x	ØB	x	L	
	50.00		60.60		5.30	

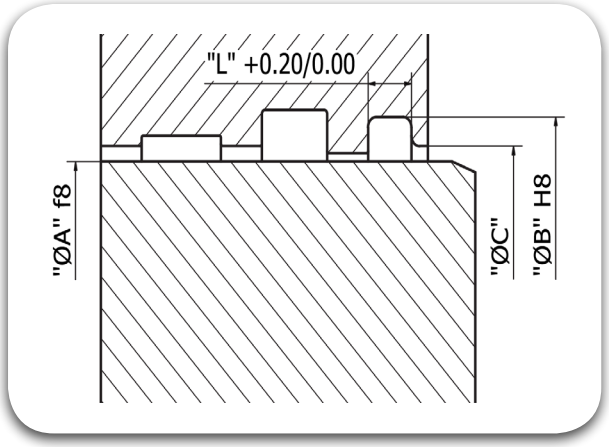

53.00

Part No	WRN 0530 0616 053				
Groove Dimension	ØA	x	ØB	x	L
	53.00		61.60		5.30

55.00

Part No	WRN 0550 0636 053				
Groove Dimension	ØA	x	ØB	x	L
	55.00		63.60		5.30

55.00

Part No	WRN 0550 0656 053				
Groove Dimension	ØA	x	ØB	x	L
	55.00		65.60		5.30

56.00

Part No	WRN 0560 0646 053				
Groove Dimension	ØA	x	ØB	x	L
	56.00		64.60		5.30

56.00

Part No	WRN 0560 0666 053				
Groove Dimension	ØA	x	ØB	x	L
	56.00		66.60		5.30

60.00

Part No	WRN 0600 0686 053				
Groove Dimension	ØA	x	ØB	x	L
	60.00		68.60		5.30

60.00

Part No	WRN 0600 0706 053				
Groove Dimension	ØA	x	ØB	x	L
	60.00		70.60		5.30

63.00

Part No	WRN 0630 0716 053				
Groove Dimension	ØA	x	ØB	x	L
	63.00		71.60		5.30

63.00

Part No	WRN 0630 0736 053				
Groove Dimension	ØA	x	ØB	x	L
	63.00		73.60		5.30

65.00

Part No	WRN 0650 0736 053				
Groove Dimension	ØA	x	ØB	x	L
	65.00		73.60		5.30

65.00

Part No	WRN 0650 0756 053				
Groove Dimension	ØA	x	ØB	x	L
	65.00		75.60		5.30

70.00

Part No	WRN 0700 0786 053				
Groove Dimension	ØA	x	ØB	x	L
	70.00		78.60		5.30

70.00

Part No	WRN 0700 0806 053				
Groove Dimension	ØA	x	ØB	x	L
	70.00		80.60		5.30

70.00

Part No	WRN 0700 0822 071
Groove Dimension	ØA x ØB x L
	70.00 x 82.20 x 7.10

72.00

Part No	WRN 0720 0806 053
Groove Dimension	ØA x ØB x L
	72.00 x 80.60 x 5.30

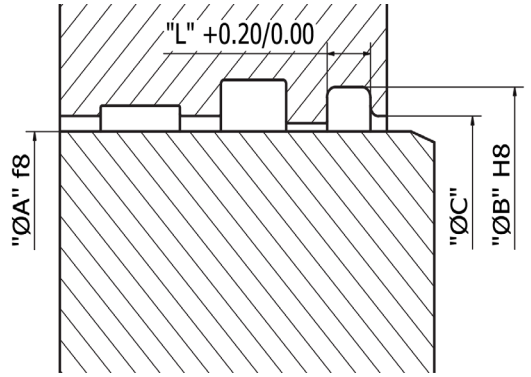

75.00

Part No	WRN 0750 0836 053
Groove Dimension	ØA x ØB x L
	75.00 x 83.60 x 5.30

75.00

Part No	WRN 0750 0872 071
Groove Dimension	ØA x ØB x L
	75.00 x 87.20 x 7.10

76.50

Part No	WRN 0765 0887 071
Groove Dimension	ØA x ØB x L
	76.50 x 88.70 x 7.10

78.00

Part No	WRN 0780 0922 071
Groove Dimension	ØA x ØB x L
	78.00 x 92.20 x 7.10

80.00

Part No	WRN 0800 0886 053
Groove Dimension	ØA x ØB x L
	80.00 x 88.60 x 5.30

80.00

Part No	WRN 0800 0922 071
Groove Dimension	ØA x ØB x L
	80.00 x 92.20 x 7.10

83.00

Part No	WRN 0830 0916 053
Groove Dimension	ØA x ØB x L
	83.00 x 91.60 x 5.30

84.00

Part No	WRN 0840 0926 053
Groove Dimension	ØA x ØB x L
	84.00 x 92.60 x 5.30

48.00

Part No	WRN 0480 0566 053
Groove Dimension	ØA x ØB x L
	48.00 x 56.60 x 5.30

85.00

Part No	WRN 0850 0936 053
Groove Dimension	ØA x ØB x L
	85.00 x 93.60 x 5.30

85.00

Part No	WRN 0850 0972 071
Groove Dimension	ØA x ØB x L
	85.00 x 97.20 x 7.10

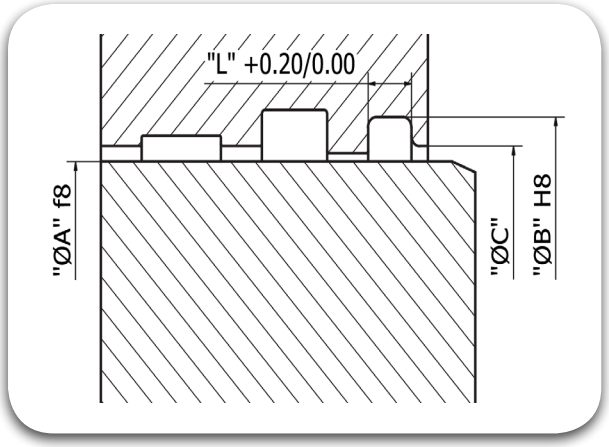

88.00

Part No	WRN 0880 1002 071		
Groove Dimension	ØA	ØB	L
	88.00	100.20	7.10

90.00

Part No	WRN 0900 1022 071		
Groove Dimension	ØA	ØB	L
	90.00	102.20	7.10

95.00

Part No	WRN 0950 1072 071		
Groove Dimension	ØA	ØB	L
	95.00	107.20	7.10

100.00

Part No	WRN 1000 1122 071		
Groove Dimension	ØA	ØB	L
	100.00	112.20	7.10

101.00

Part No	WRN 1010 0111 053		
Groove Dimension	ØA	ØB	L
	101.00	111.00	5.30

103.00

Part No	WRN 1030 1152 071		
Groove Dimension	ØA	ØB	L
	103.00	115.20	7.10

105.00

Part No	WRN 1050 1172 071		
Groove Dimension	ØA	ØB	L
	105.00	117.20	7.10

110.00

Part No	WRN 1100 1222 071		
Groove Dimension	ØA	ØB	L
	110.00	122.20	7.10

115.00

Part No	WRN 1150 1272 071		
Groove Dimension	ØA	ØB	L
	115.00	127.20	7.10

118.00

Part No	WRN 1180 1302 071		
Groove Dimension	ØA	ØB	L
	118.00	130.20	7.10

120.00

Part No	WRN 1200 1280 053		
Groove Dimension	ØA	ØB	L
	120.00	128.00	5.30

120.00

Part No	WRN 1200 1322 071		
Groove Dimension	ØA	ØB	L
	120.00	132.20	7.10

125.00

Part No	WRN 1250 1372 071		
Groove Dimension	ØA	ØB	L
	125.00	137.20	7.10

125.00

Part No	WRN 1250 1401 102
Groove Dimension	ØA x ØB x L
	125.00 x 140.10 x 10.20

127.00

Part No	WRN 1270 1356 053
Groove Dimension	ØA x ØB x L
	127.00 x 135.60 x 5.30

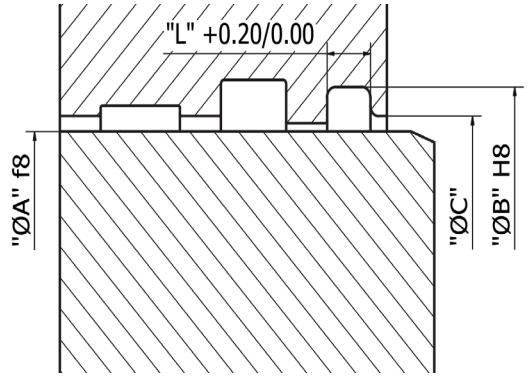

127.00

Part No	WRN 1270 1392 071
Groove Dimension	ØA x ØB x L
	127.00 x 139.20 x 7.10

130.00

Part No	WRN 1300 1422 071
Groove Dimension	ØA x ØB x L
	130.00 x 142.20 x 7.10

135.00

Part No	WRN 1350 1472 071
Groove Dimension	ØA x ØB x L
	135.00 x 147.20 x 7.10

135.00

Part No	WRN 1350 1492 071
Groove Dimension	ØA x ØB x L
	135.00 x 149.20 x 7.10

140.00

Part No	WRN 1400 1522 071
Groove Dimension	ØA x ØB x L
	140.00 x 152.20 x 7.10

140.00

Part No	WRN 1400 1572 101
Groove Dimension	ØA x ØB x L
	140.00 x 157.20 x 10.10

145.00

Part No	WRN 1450 1622 071
Groove Dimension	ØA x ØB x L
	145.00 x 162.20 x 7.10

150.00

Part No	WRN 1500 1692 071
Groove Dimension	ØA x ØB x L
	150.00 x 169.20 x 7.10

155.00

Part No	WRN 1550 1686 071
Groove Dimension	ØA x ØB x L
	155.00 x 168.60 x 7.10

160.00

Part No	WRN 1600 1752 053
Groove Dimension	ØA x ØB x L
	160.00 x 175.20 x 5.30

160.00

Part No	WRN 1600 1852 101
Groove Dimension	ØA x ØB x L
	160.00 x 185.20 x 10.10

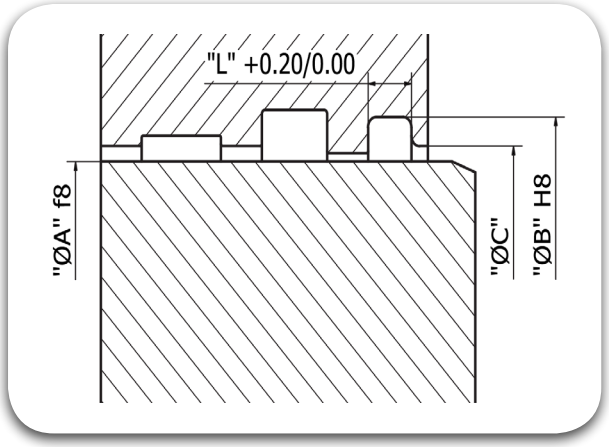

170.00

Part No	WRN 1700 1892 101					
Groove Dimension	ØA	x	ØB	x	L	
	170.00		189.20		10.10	

175.00

Part No	WRN 1750 1892 071					
Groove Dimension	ØA	x	ØB	x	L	
	175.00		189.20		7.10	

180.00

Part No	WRN 1800 1950 101					
Groove Dimension	ØA	x	ØB	x	L	
	180.00		195.00		10.10	

180.00

Part No	WRN 1800 2000 102					
Groove Dimension	ØA	x	ØB	x	L	
	180.00		200.00		10.20	

196.00

Part No	WRN 1960 2102 071					
Groove Dimension	ØA	x	ØB	x	L	
	196.00		210.20		7.10	

200.00

Part No	WRN 2000 2150 101					
Groove Dimension	ØA	x	ØB	x	L	
	200.00		215.00		10.10	

200.00

Part No	WRN 2000 2200 102					
Groove Dimension	ØA	x	ØB	x	L	
	200.00		220.00		10.20	

210.00

Part No	WRN 2100 2300 102					
Groove Dimension	ØA	x	ØB	x	L	
	210.00		230.00		10.20	

219.50

Part No	WRN 2195 2337 071					
Groove Dimension	ØA	x	ØB	x	L	
	219.50		233.70		7.10	

240.00

Part No	WRN 2400 2600 102					
Groove Dimension	ØA	x	ØB	x	L	
	240.00		260.00		10.20	

244.50

Part No	WRN 2445 2587 071					
Groove Dimension	ØA	x	ØB	x	L	
	244.50		258.70		7.10	

250.00

Part No	WRN 2500 2700 102					
Groove Dimension	ØA	x	ØB	x	L	
	250.00		270.00		10.20	

260.00

Part No	WRN 2600 2800 102					
Groove Dimension	ØA	x	ØB	x	L	
	260.00		280.00		10.20	

280.00

Part No	WRN 2800 3000 102					
Groove Dimension	ØA	x	ØB	x	L	
	280.00		300.00		10.20	

300.00

Part No	WRN 3000 3200 102					
Groove Dimension	ØA	x	ØB	x	L	
	300.00		320.00		10.20	

320.00

Part No	WRN 3200 3400 102					
Groove Dimension	ØA	x	ØB	x	L	
	320.00		340.00		10.20	

360.00

Part No	WRN 3600 3800 102					
Groove Dimension	ØA	x	ØB	x	L	
	360.00		380.00		10.20	

400.00

Part No	WRN 4000 4200 102					
Groove Dimension	ØA	x	ØB	x	L	
	400.00		420.00		10.20	

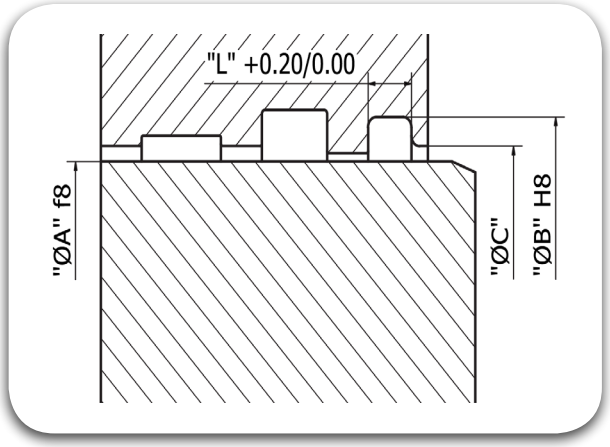

Wiper Seals

WPN

TRIADA
TECHNOLOGIES

#Sealing**Excellence**






Description

The WPN Scraper is an easy to install snap in type Wiper Seal in TRIAFLEX® (NBR), but with a shorter lip, which does not allow the dust or dirt accumulation above the lip, due to hardware design.

Diameter Range	Ø4.00 – Ø450.00 (Larger dia. on request)
Standard material	TRIAFLEX® T591 (NBR 90)
Temperature(°C)	-30ºC to 120ºC
Speed	≤ 0.80 m/s
Fluids	Hydraulic fluids (Mineral Oil based).

Material Details

Seal Material	Seal Material / Code
TRIAFLEX®	NBR 90 T591

Nomenclature

Part No	WPN	1100	1300	325	CXN
	Seal profile	Rod Dia x 10	Groove Dia x 10	Groove Width x 10	Seal Material Code

Groove Details

Rod Diameter Range "ØA"	Mouth Diameter "ØC"	Mouth Width "E"
4.00 - 100.00	'ØA' + 6.00mm	1.00mm
105.00 - 200.00	'ØA' + 9.00mm	1.50mm
210.00 - 450.00	'ØA' + 11.00mm	2.00mm

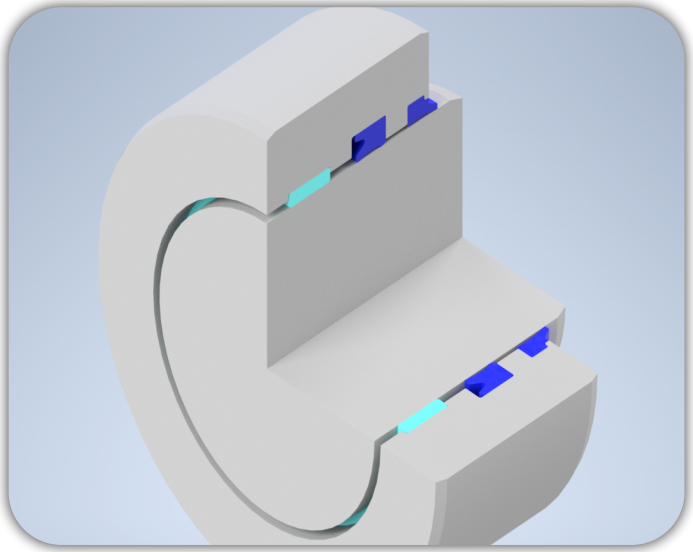

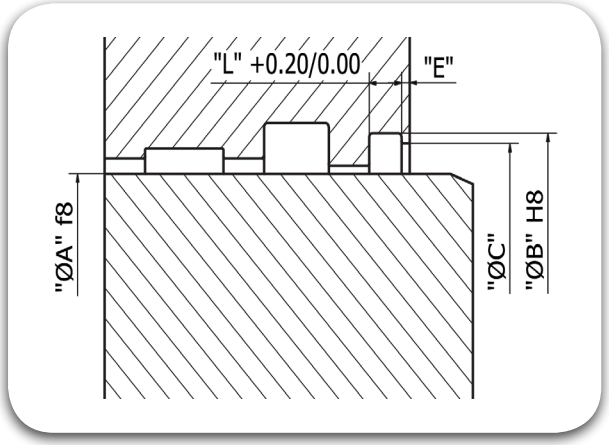

4.00

Part No	WPN 0040 0120 040				
Groove Dimension	ØA	x	ØB	x	L
	4.00		12.00		4.00

8.00

Part No	WPN 0080 0160 040				
Groove Dimension	ØA	x	ØB	x	L
	8.00		16.00		4.00

10.00

Part No	WPN 0100 0180 040				
Groove Dimension	ØA	x	ØB	x	L
	10.00		18.00		4.00

12.00

Part No	WPN 0120 0200 040				
Groove Dimension	ØA	x	ØB	x	L
	12.00		20.00		4.00

14.00

Part No	WPN 0140 0220 040				
Groove Dimension	ØA	x	ØB	x	L
	14.00		22.00		4.00

15.00

Part No	WPN 0150 0230 040				
Groove Dimension	ØA	x	ØB	x	L
	15.00		23.00		4.00

16.00

Part No	WPN 0160 0240 040				
Groove Dimension	ØA	x	ØB	x	L
	16.00		24.00		4.00

18.00

Part No	WPN 0180 0260 040				
Groove Dimension	ØA	x	ØB	x	L
	18.00		26.00		4.00

20.00

Part No	WPN 0200 0280 040				
Groove Dimension	ØA	x	ØB	x	L
	20.00		28.00		4.00

22.00

Part No	WPN 0220 0300 040				
Groove Dimension	ØA	x	ØB	x	L
	22.00		30.00		4.00

24.00

Part No	WPN 0240 0320 040				
Groove Dimension	ØA	x	ØB	x	L
	24.00		32.00		4.00

25.00

Part No	WPN 0250 0330 040				
Groove Dimension	ØA	x	ØB	x	L
	25.00		33.00		4.00

28.00

Part No	WPN 0280 0360 040				
Groove Dimension	ØA	x	ØB	x	L
	28.00		36.00		4.00

30.00

Part No	WPN 0300 0380 040					
Groove Dimension	ØA	x	ØB	x	L	
	30.00		38.00		4.00	

32.00

Part No	WPN 0320 0400 040					
Groove Dimension	ØA	x	ØB	x	L	
	32.00		40.00		4.00	

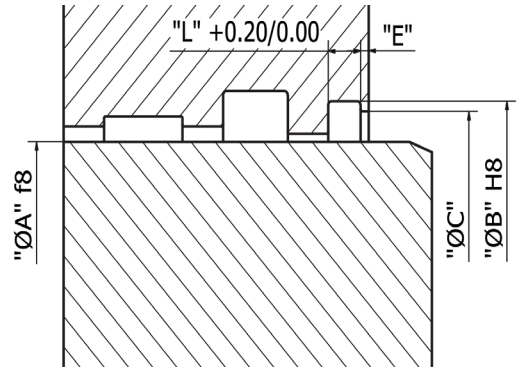

35.00

Part No	WPN 0350 0430 040					
Groove Dimension	ØA	x	ØB	x	L	
	35.00		43.00		4.00	

36.00

Part No	WPN 0360 0440 040					
Groove Dimension	ØA	x	ØB	x	L	
	36.00		44.00		4.00	

38.00

Part No	WPN 0380 0460 040					
Groove Dimension	ØA	x	ØB	x	L	
	38.00		46.00		4.00	

40.00

Part No	WPN 0400 0480 040					
Groove Dimension	ØA	x	ØB	x	L	
	40.00		48.00		4.00	

42.00

Part No	WPN 0420 0500 040					
Groove Dimension	ØA	x	ØB	x	L	
	42.00		50.00		4.00	

45.00

Part No	WPN 0450 0530 040					
Groove Dimension	ØA	x	ØB	x	L	
	45.00		53.00		4.00	

48.00

Part No	WPN 0480 0560 040					
Groove Dimension	ØA	x	ØB	x	L	
	48.00		56.00		4.00	

50.00

Part No	WPN 0500 0580 040					
Groove Dimension	ØA	x	ØB	x	L	
	50.00		58.00		4.00	

52.00

Part No	WPN 0520 0600 040					
Groove Dimension	ØA	x	ØB	x	L	
	52.00		60.00		4.00	

55.00

Part No	WPN 0550 0630 040					
Groove Dimension	ØA	x	ØB	x	L	
	55.00		63.00		4.00	

56.00

Part No	WPN 0560 0640 040					
Groove Dimension	ØA	x	ØB	x	L	
	56.00		64.00		4.00	

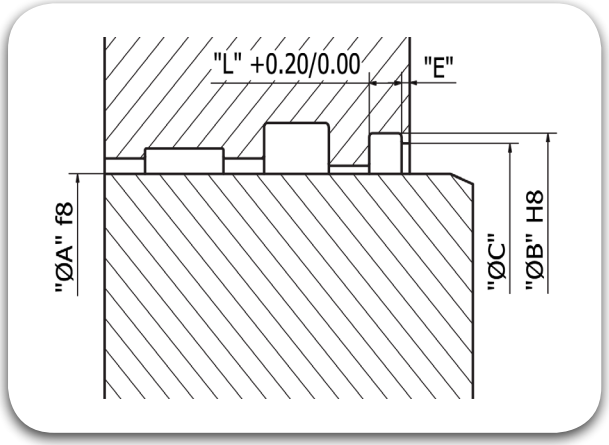

60.00

Part No	WPN 0600 0680 040					
Groove Dimension	ØA	x	ØB	x	L	
	60.00		68.00		4.00	

62.00

Part No	WPN 0620 0700 040					
Groove Dimension	ØA	x	ØB	x	L	
	62.00		70.00		4.00	

63.00

Part No	WPN 0630 0710 040					
Groove Dimension	ØA	x	ØB	x	L	
	63.00		71.00		4.00	

65.00

Part No	WPN 0650 0730 040					
Groove Dimension	ØA	x	ØB	x	L	
	65.00		73.00		4.00	

70.00

Part No	WPN 0700 0780 040					
Groove Dimension	ØA	x	ØB	x	L	
	70.00		78.00		4.00	

75.00

Part No	WPN 0750 0830 040					
Groove Dimension	ØA	x	ØB	x	L	
	75.00		83.00		4.00	

80.00

Part No	WPN 0800 0880 040					
Groove Dimension	ØA	x	ØB	x	L	
	80.00		88.00		4.00	

85.00

Part No	WPN 0850 0930 040					
Groove Dimension	ØA	x	ØB	x	L	
	85.00		93.00		4.00	

90.00

Part No	WPN 0900 0980 040					
Groove Dimension	ØA	x	ØB	x	L	
	90.00		98.00		4.00	

95.00

Part No	WPN 0950 1030 040					
Groove Dimension	ØA	x	ØB	x	L	
	95.00		103.00		4.00	

100.00

Part No	WPN 1000 1080 040					
Groove Dimension	ØA	x	ØB	x	L	
	100.00		108.00		4.00	

105.00

Part No	WPN 1050 1170 055					
Groove Dimension	ØA	x	ØB	x	L	
	105.00		117.00		5.50	

110.00

Part No	WPN 1100 1220 055					
Groove Dimension	ØA	x	ØB	x	L	
	110.00		122.00		5.50	

120.00

Part No	WPN 1200 1320 055					
Groove Dimension	ØA	x	ØB	x	L	
	120.00		132.00		5.50	

125.00

Part No	WPN 1250 1370 055					
Groove Dimension	ØA	x	ØB	x	L	
	125.00		137.00		5.50	

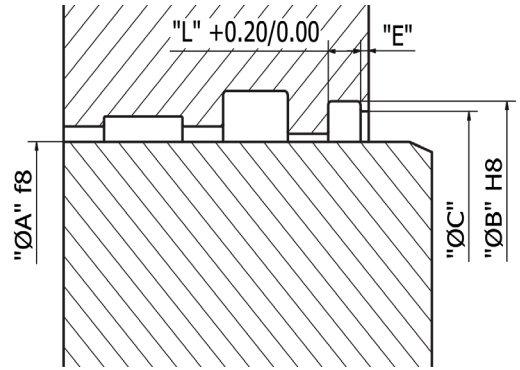

130.00

Part No	WPN 1300 1420 055					
Groove Dimension	ØA	x	ØB	x	L	
	130.00		142.00		5.50	

140.00

Part No	WPN 1400 1520 055					
Groove Dimension	ØA	x	ØB	x	L	
	140.00		152.00		5.50	

150.00

Part No	WPN 1500 1620 055					
Groove Dimension	ØA	x	ØB	x	L	
	150.00		162.00		5.50	

155.00

Part No	WPN 1550 1670 055					
Groove Dimension	ØA	x	ØB	x	L	
	155.00		167.00		5.50	

160.00

Part No	WPN 1600 1720 055					
Groove Dimension	ØA	x	ØB	x	L	
	160.00		172.00		5.50	

170.00

Part No	WPN 1700 1820 055					
Groove Dimension	ØA	x	ØB	x	L	
	170.00		182.00		5.50	

180.00

Part No	WPN 1800 1920 055					
Groove Dimension	ØA	x	ØB	x	L	
	180.00		192.00		5.50	

190.00

Part No	WPN 1900 2020 055					
Groove Dimension	ØA	x	ØB	x	L	
	190.00		202.00		5.50	

200.00

Part No	WPN 2000 2120 055					
Groove Dimension	ØA	x	ØB	x	L	
	200.00		212.00		5.50	

210.00

Part No	WPN 2100 2250 065					
Groove Dimension	ØA	x	ØB	x	L	
	210.00		225.00		6.50	

220.00

Part No	WPN 2200 2350 065					
Groove Dimension	ØA	x	ØB	x	L	
	220.00		235.00		6.50	

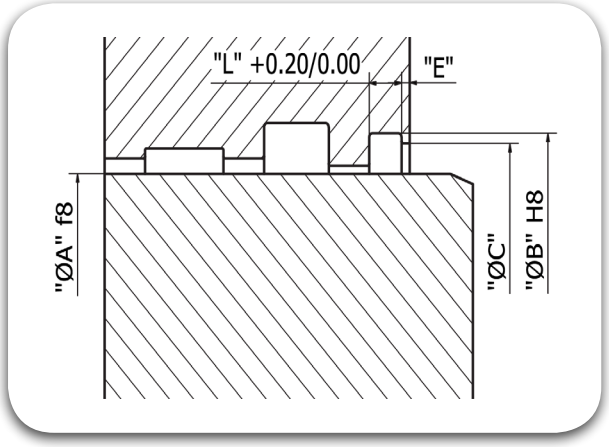

240.00

Part No	WPN 2400 2550 065				
Groove Dimension	ØA	x	ØB	x	L
	240.00		255.00		6.50

250.00

Part No	WPN 2500 2650 065				
Groove Dimension	ØA	x	ØB	x	L
	250.00		265.00		6.50

300.00

Part No	WPN 3000 3150 065				
Groove Dimension	ØA	x	ØB	x	L
	300.00		315.00		6.50

340.00

Part No	WPN 3400 3550 065				
Groove Dimension	ØA	x	ØB	x	L
	340.00		355.00		6.50

450.00

Part No	WPN 4500 4650 065				
Groove Dimension	ØA	x	ØB	x	L
	450.00		465.00		6.50

Wiper Seals

WRH

TRIADA
TECHNOLOGIES

#Sealing**Excellence**






Description

The WRH Scraper is an easy to install snap in type Wiper Seals. Similar to WRN but in TRIATHANE®(PU), which is a Polyether, based Poly-Urethane Compound. The clink on the outer edge acts as a moisture absorption lock.

Diameter Range	Ø10.00 – Ø400.00 (Larger dia. on request)
Standard material	TRIATHANE® T479 (PU)
Temperature(°C)	- 35°C to 110°C
Speed	< 1.00 m/s
Fluids	Water at room temperature and Mineral Oils

Material Details

Seal Material	Seal Material / Code
TRIATHANE®	Poly-Urethane T479

Nomenclature

Part No	WRH	1000	1222	071	T479
	Seal profile	Rod Dia x 10	Groove Dia x 10	Groove Width x 10	Seal Material Code

Groove Details

Groove Width "L"	Mouth Diameter "ØC"
5.00	'ØA' + 5.50mm
5.30	'ØA' + 3.00mm
6.30	'ØA' + 7.00mm
7.10	'ØA' + 6.00mm
10.10	'ØA' + 10.00mm

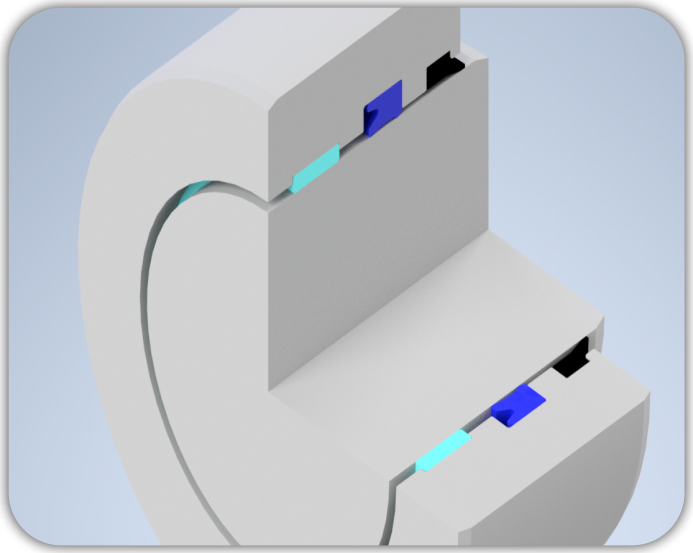

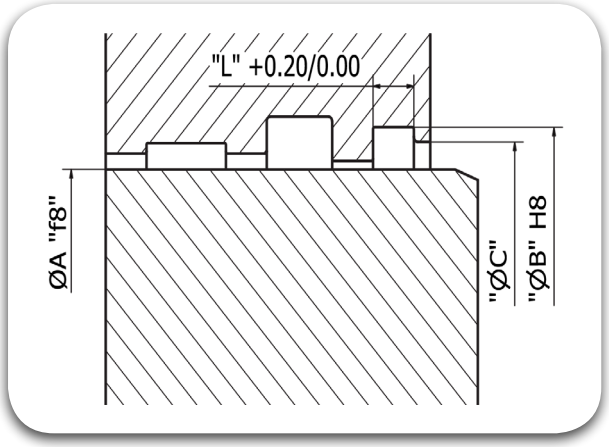

20.00

Part No	WRH 0200 0280 050					
Groove Dimension	ØA	x	ØB	x	L	
	20.00		28.00		5.00	

20.00

Part No	WRH 0200 0286 053					
Groove Dimension	ØA	x	ØB	x	L	
	20.00		28.60		5.30	

22.00

Part No	WRH 0220 0300 050					
Groove Dimension	ØA	x	ØB	x	L	
	22.00		30.00		5.00	

22.00

Part No	WRH 0220 0336 053					
Groove Dimension	ØA	x	ØB	x	L	
	22.00		33.60		5.30	

25.00

Part No	WRH 0250 0330 050					
Groove Dimension	ØA	x	ØB	x	L	
	25.00		33.00		5.00	

25.00

Part No	WRH 0250 0336 053					
Groove Dimension	ØA	x	ØB	x	L	
	25.00		33.60		5.30	

28.00

Part No	WRH 0280 0360 050					
Groove Dimension	ØA	x	ØB	x	L	
	28.00		36.00		5.00	

28.00

Part No	WRH 0280 0366 053					
Groove Dimension	ØA	x	ØB	x	L	
	28.00		36.60		5.30	

30.00

Part No	WRH 0300 0380 050					
Groove Dimension	ØA	x	ØB	x	L	
	30.00		38.00		5.00	

30.00

Part No	WRH 0300 0386 053					
Groove Dimension	ØA	x	ØB	x	L	
	30.00		38.60		5.30	

32.00

Part No	WRH 0320 0400 050					
Groove Dimension	ØA	x	ØB	x	L	
	32.00		40.00		5.00	

32.00

Part No	WRH 0320 0406 053					
Groove Dimension	ØA	x	ØB	x	L	
	32.00		40.60		5.30	

35.00

Part No	WRH 0350 0430 050					
Groove Dimension	ØA	x	ØB	x	L	
	35.00		43.00		5.00	

35.00

Part No	WRH 0350 0436 053					
Groove Dimension	ØA	x	ØB	x	L	
	35.00		43.60		5.30	

36.00

Part No	WRH 0360 0440 050					
Groove Dimension	ØA	x	ØB	x	L	
	36.00		44.00		5.00	

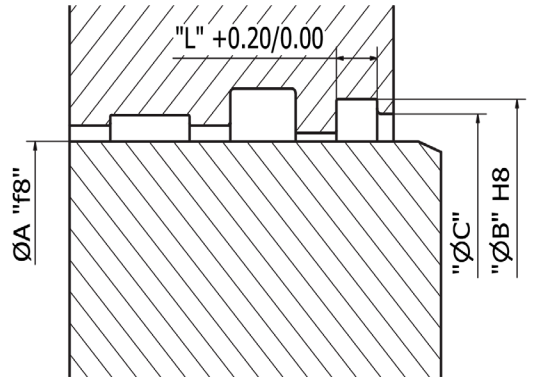

36.00

Part No	WRH 0360 0446 053					
Groove Dimension	ØA	x	ØB	x	L	
	36.00		44.60		5.30	

38.00

Part No	WRH 0380 0466 053					
Groove Dimension	ØA	x	ØB	x	L	
	38.00		46.60		5.30	

40.00

Part No	WRH 0400 0480 050					
Groove Dimension	ØA	x	ØB	x	L	
	40.00		48.00		5.00	

40.00

Part No	WRH 0400 0486 053					
Groove Dimension	ØA	x	ØB	x	L	
	40.00		48.60		5.30	

45.00

Part No	WRH 0450 0530 050					
Groove Dimension	ØA	x	ØB	x	L	
	45.00		53.00		5.00	

45.00

Part No	WRH 0450 0536 053					
Groove Dimension	ØA	x	ØB	x	L	
	45.00		53.60		5.30	

50.00

Part No	WRH 0500 0580 050					
Groove Dimension	ØA	x	ØB	x	L	
	50.00		58.00		5.00	

50.00

Part No	WRH 0500 0586 053					
Groove Dimension	ØA	x	ØB	x	L	
	50.00		58.60		5.30	

50.00

Part No	WRH 0500 0606 053					
Groove Dimension	ØA	x	ØB	x	L	
	50.00		60.60		5.30	

55.00

Part No	WRH 0550 0650 063					
Groove Dimension	ØA	x	ØB	x	L	
	55.00		65.00		6.30	

55.00

Part No	WRH 0550 0636 053					
Groove Dimension	ØA	x	ØB	x	L	
	55.00		63.60		5.30	

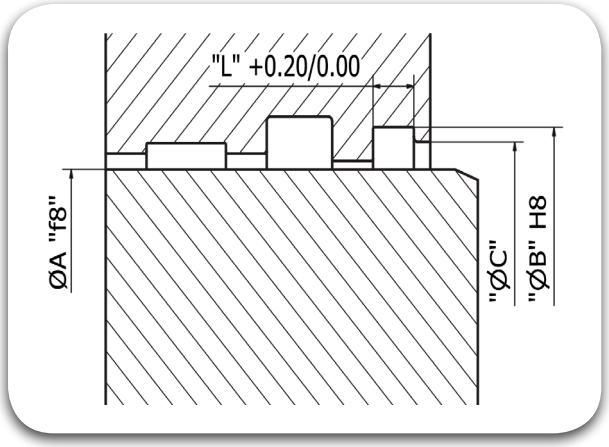

55.00

Part No	WRH 0550 0656 053					
Groove Dimension	ØA	x	ØB	x	L	
	55.00		65.60		5.30	

56.00

Part No	WRH 0560 0660 063					
Groove Dimension	ØA	x	ØB	x	L	
	56.00		66.00		6.30	

56.00

Part No	WRH 0560 0666 053					
Groove Dimension	ØA	x	ØB	x	L	
	56.00		66.60		5.30	

60.00

Part No	WRH 0600 0700 063					
Groove Dimension	ØA	x	ØB	x	L	
	60.00		70.00		6.30	

60.00

Part No	WRH 0600 0706 053					
Groove Dimension	ØA	x	ØB	x	L	
	60.00		70.60		5.30	

70.00

Part No	WRH 0700 0800 063					
Groove Dimension	ØA	x	ØB	x	L	
	70.00		80.00		6.30	

70.00

Part No	WRH 0700 0822 071					
Groove Dimension	ØA	x	ØB	x	L	
	70.00		82.20		7.10	

70.00

Part No	WRH 0700 0806 053					
Groove Dimension	ØA	x	ØB	x	L	
	70.00		80.60		5.30	

75.00

Part No	WRH 0750 0872 071					
Groove Dimension	ØA	x	ØB	x	L	
	75.00		87.20		7.10	

80.00

Part No	WRH 0800 0900 063					
Groove Dimension	ØA	x	ØB	x	L	
	80.00		90.00		6.30	

80.00

Part No	WRH 0800 0922 071					
Groove Dimension	ØA	x	ØB	x	L	
	80.00		92.20		7.10	

80.00

Part No	WRH 0800 0886 053					
Groove Dimension	ØA	x	ØB	x	L	
	80.00		88.60		5.30	

90.00

Part No	WRH 0900 1000 063					
Groove Dimension	ØA	x	ØB	x	L	
	90.00		100.00		6.30	

90.00

		ØA		ØB		L
Part No	WRH 0900 1022 071					
Groove Dimension		90.00	x	102.20	x	7.10

100.00

		ØA		ØB		L
Part No	WRH 1000 1150 095					
Groove Dimension		100.00	x	115.00	x	9.50

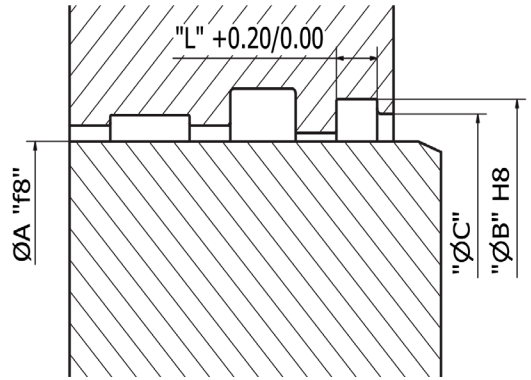

100.00

		ØA		ØB		L
Part No	WRH 1000 1122 071					
Groove Dimension		100.00	x	112.20	x	7.10

110.00

		ØA		ØB		L
Part No	WRH 1100 1222 071					
Groove Dimension		110.00	x	122.20	x	7.10

125.00

		ØA		ØB		L
Part No	WRH 1250 1372 071					
Groove Dimension		125.00	x	137.20	x	7.10

140.00

		ØA		ØB		L
Part No	WRH 1400 1550 095					
Groove Dimension		140.00	x	155.00	x	9.50

150.00

		ØA		ØB		L
Part No	WRH 150 1622 071					
Groove Dimension		150.00	x	162.20	x	7.10

240.00

		ØA		ØB		L
Part No	WRH 2400 2552 101					
Groove Dimension		240.00	x	255.20	x	10.10

400.00

		ØA		ØB		L
Part No	WRH 4000 4200 102					
Groove Dimension		400.00	x	420.00	x	10.20

Wiper Seals

WDN

TRIADA
TECHNOLOGIES

#Sealing**Excellence**


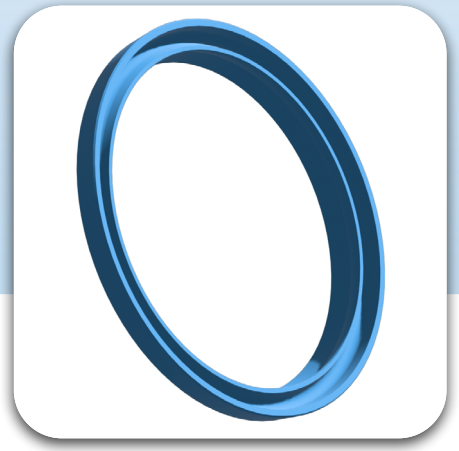

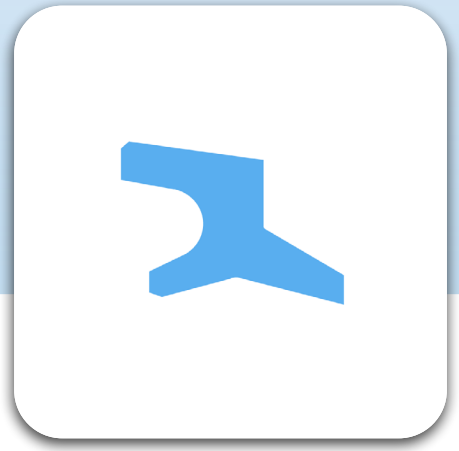

Description

The WDN Scraper is one of the simplest Snap in type Wiper Seals (similar to WDD style of Wiper Seal, but with different groove dimensions), mostly suggested to be used in conjunction with a back pumping Primary Seal/ Secondary Seal, like TRITILT® (RSS type) Seal. The Inner Lip holds the film of oil within the system without being leaked out and the Outer Lip shall prevent any dust particles entering the system.

Diameter Range	Ø12.00 - Ø250.00 (Larger dia. on request)
Standard material	TRIAFLEX® T591(NBR 90)
Temperature(°C)	-30ºC to 120ºC
Speed	≤ 1.00 m/s
Fluids	Hydraulic fluids (Mineral Oil based).

Material Details

Seal Material	Seal Material / Code
TRIAFLEX®	NBR 90 T591
TRIAFLEX®	FKM 90 T691

Nomenclature

Part No	WDN	0120	0186	038	T591
	Seal profile	Rod Dia x 10	Groove Dia x 10	Groove Width x 10	Seal Material Code

Groove Details

Rod Diameter Range "ØA"	Mouth Diameter "ØC"
12.00 - 70.00	'ØA' + 3.00mm
70.00 - 100.00	'ØA' + 6.00mm

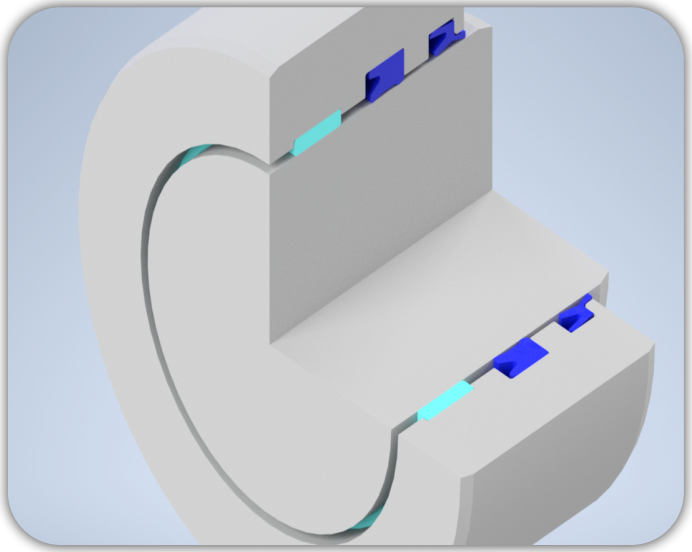

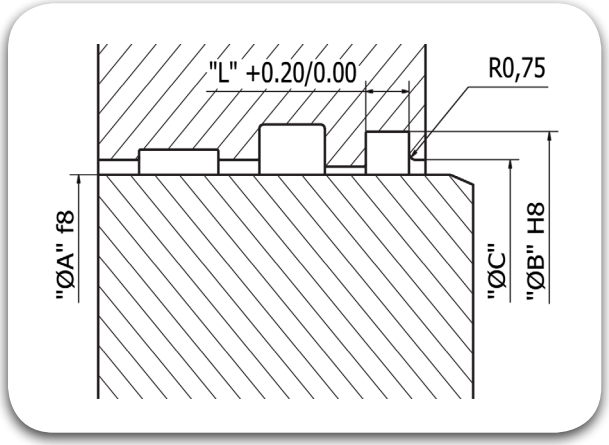

12.00

Part No	WDN 0120 0186 038				
Groove Dimension	ØA	x	ØB	x	L
	12.00		18.60		3.80

12.00

Part No	WDN 0120 0206 053				
Groove Dimension	ØA	x	ØB	x	L
	12.00		20.60		5.30

18.00

Part No	WDN 0180 0246 038				
Groove Dimension	ØA	x	ØB	x	L
	18.00		24.60		3.80

20.00

Part No	WDN 0200 0286 053				
Groove Dimension	ØA	x	ØB	x	L
	20.00		28.60		5.30

22.00

Part No	WDN 0220 0306 053				
Groove Dimension	ØA	x	ØB	x	L
	22.00		30.60		5.30

25.00

Part No	WDN 0250 0336 053				
Groove Dimension	ØA	x	ØB	x	L
	25.00		33.60		5.30

28.00

Part No	WDN 0280 0366 053				
Groove Dimension	ØA	x	ØB	x	L
	28.00		36.60		5.30

30.00

Part No	WDN 0300 0380 053				
Groove Dimension	ØA	x	ØB	x	L
	30.00		38.00		5.30

32.00

Part No	WDN 0320 0406 053				
Groove Dimension	ØA	x	ØB	x	L
	32.00		40.60		5.30

35.00

Part No	WDN 0350 0436 053				
Groove Dimension	ØA	x	ØB	x	L
	35.00		43.60		5.30

36.00

Part No	WDN 0360 0446 053				
Groove Dimension	ØA	x	ØB	x	L
	36.00		44.60		5.30

40.00

Part No	WDN 0400 0486 053				
Groove Dimension	ØA	x	ØB	x	L
	40.00		48.60		5.30

42.00

Part No	WDN 0420 0500 053				
Groove Dimension	ØA	x	ØB	x	L
	42.00		50.00		5.30

45.00

Part No	WDN 0450 0536 053					
Groove Dimension	ØA	x	ØB	x	L	
	45.00		53.60		5.30	

50.00

Part No	WDN 0500 0586 053					
Groove Dimension	ØA	x	ØB	x	L	
	50.00		58.60		5.30	

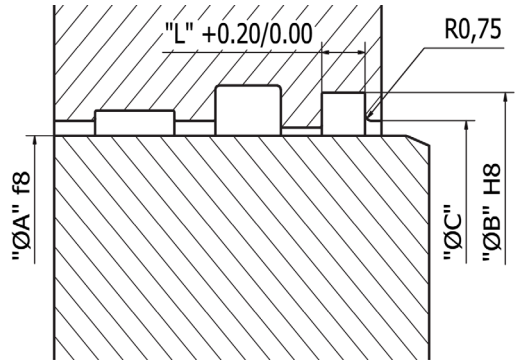

55.00

Part No	WDN 0550 0636 053					
Groove Dimension	ØA	x	ØB	x	L	
	55.00		63.60		5.30	

56.00

Part No	WDN 0560 0646 053					
Groove Dimension	ØA	x	ØB	x	L	
	56.00		64.60		5.30	

60.00

Part No	WDN 0600 0686 053					
Groove Dimension	ØA	x	ØB	x	L	
	60.00		68.60		5.30	

65.00

Part No	WDN 0650 0736 053					
Groove Dimension	ØA	x	ØB	x	L	
	65.00		73.60		5.30	

66.00

Part No	WDN 0660 0746 053					
Groove Dimension	ØA	x	ØB	x	L	
	66.00		74.60		5.30	

70.00

Part No	WDN 0700 0786 053					
Groove Dimension	ØA	x	ØB	x	L	
	70.00		78.60		5.30	

78.00

Part No	WDN 0780 0922 071					
Groove Dimension	ØA	x	ØB	x	L	
	78.00		92.20		7.10	

80.00

Part No	WDN 0800 0922 071					
Groove Dimension	ØA	x	ØB	x	L	
	80.00		92.20		7.10	

Wiper Seals

WDD

TRIADA
TECHNOLOGIES

#Sealing**Excellence**




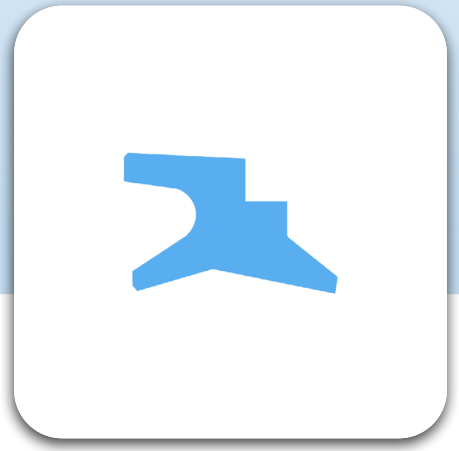

Description

The WDD Scraper is one of the simplest Snap in type Wiper Seals (similar to WDN type, but with different groove sizes), mostly suggested to be used in conjunction with a back pumping Primary Seal, like TRITILT® (RSS Type) Seal. The inner lip holds the film of oil within the system without being leaked out and the outer lip shall prevent any dust particles entering the system.

Diameter Range	Ø10.00 – Ø2500.00
Standard material	TRIAFLEX® T591 (NBR)
Temperature(°C)	- 40°C to 200°C
Speed	< 1.00 m/s
Fluids	Water at room temperature and Mineral Oils

Material Details

Seal Material	Seal Material / Code
TRIAFLEX®	NBR 90 T591
TRIAFLEX®	FKM 90 T691

Nomenclature

Part No	WDD	1000	1080	060	T591
	Seal profile	Rod Dia x 10	Groove Dia x 10	Groove Width x 10	Seal Material Code

Groove Details

Rod Diameter Range “ØA”	Mouth Groove Diameter “ØC”
10.00 - 100.00	‘ØA’ + 3.50mm
105.00 - 210.00	‘ØA’ + 5.00mm
220.00 - 400.00	‘ØA’ + 7.00mm

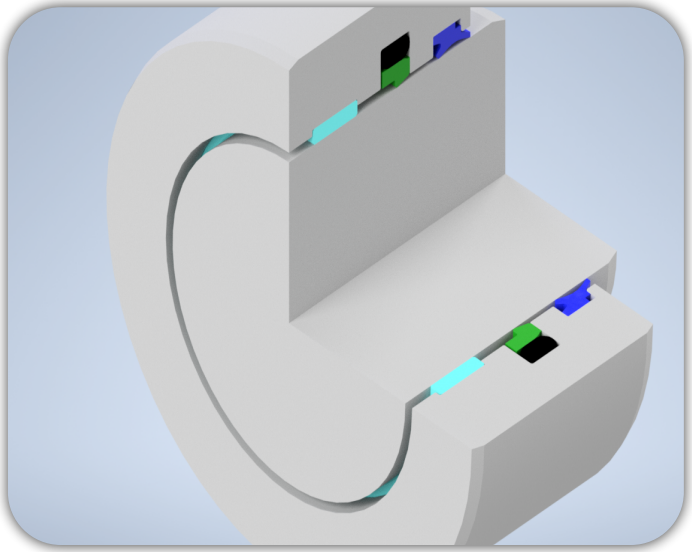

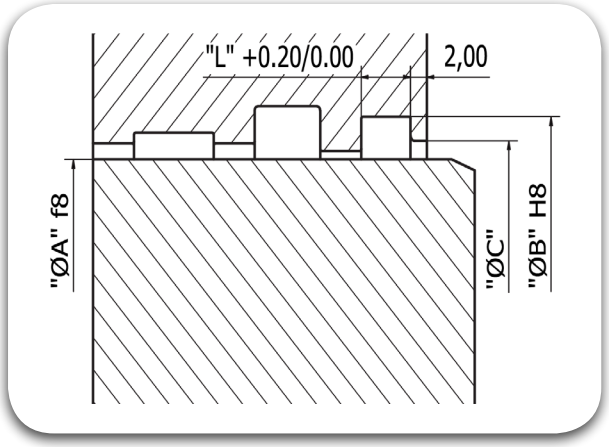

10.00

Part No	WDD 0100 0180 060				
Groove Dimension	ØA	x	ØB	x	L
	10.00		18.00		4.00

12.00

Part No	WDD 0120 0200 060				
Groove Dimension	ØA	x	ØB	x	L
	12.00		20.00		4.00

14.00

Part No	WDD 0140 0220 060				
Groove Dimension	ØA	x	ØB	x	L
	14.00		22.00		4.00

15.00

Part No	WDD 0150 0230 060				
Groove Dimension	ØA	x	ØB	x	L
	15.00		23.00		4.00

16.00

Part No	WDD 0160 0240 060				
Groove Dimension	ØA	x	ØB	x	L
	16.00		24.00		4.00

18.00

Part No	WDD 0180 0260 060				
Groove Dimension	ØA	x	ØB	x	L
	18.00		26.00		4.00

20.00

Part No	WDD 0200 0280 060				
Groove Dimension	ØA	x	ØB	x	L
	20.00		28.00		4.00

22.00

Part No	WDD 0220 0300 060				
Groove Dimension	ØA	x	ØB	x	L
	22.00		30.00		4.00

24.00

Part No	WDD 0240 0320 060				
Groove Dimension	ØA	x	ØB	x	L
	24.00		32.00		4.00

25.00

Part No	WDD 0250 0330 060				
Groove Dimension	ØA	x	ØB	x	L
	25.00		33.00		4.00

28.00

Part No	WDD 0280 0360 060				
Groove Dimension	ØA	x	ØB	x	L
	28.00		36.00		4.00

30.00

Part No	WDD 0300 0380 060				
Groove Dimension	ØA	x	ØB	x	L
	30.00		38.00		4.00

32.00

Part No	WDD 0320 0400 060				
Groove Dimension	ØA	x	ØB	x	L
	32.00		40.00		4.00

35.00

Part No	WDD 0350 0430 060					
Groove Dimension	ØA	x	ØB	x	L	
	35.00		43.00		4.00	

36.00

Part No	WDD 0360 0440 060					
Groove Dimension	ØA	x	ØB	x	L	
	36.00		44.00		4.00	

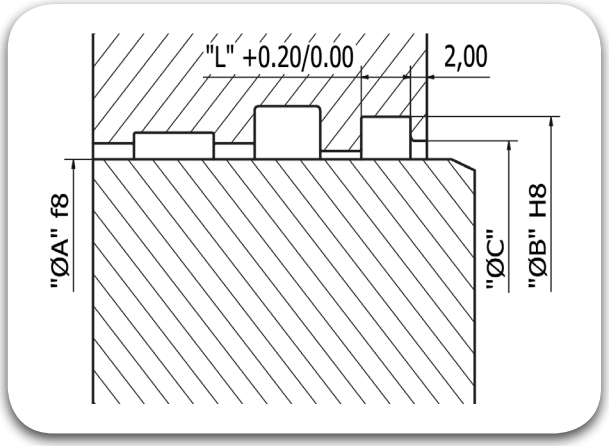

37.00

Part No	WDD 0370 0450 060					
Groove Dimension	ØA	x	ØB	x	L	
	37.00		45.00		4.00	

38.00

Part No	WDD 0380 0460 060					
Groove Dimension	ØA	x	ØB	x	L	
	38.00		46.00		4.00	

40.00

Part No	WDD 0400 0480 060					
Groove Dimension	ØA	x	ØB	x	L	
	40.00		48.00		4.00	

42.00

Part No	WDD 0420 0500 060					
Groove Dimension	ØA	x	ØB	x	L	
	42.00		50.00		4.00	

45.00

Part No	WDD 0450 0530 060					
Groove Dimension	ØA	x	ØB	x	L	
	45.00		53.00		4.00	

46.00

Part No	WDD 0460 0540 060					
Groove Dimension	ØA	x	ØB	x	L	
	46.00		54.00		4.00	

48.00

Part No	WDD 0480 0560 060					
Groove Dimension	ØA	x	ØB	x	L	
	48.00		56.00		4.00	

50.00

Part No	WDD 0500 0580 060					
Groove Dimension	ØA	x	ØB	x	L	
	50.00		58.00		4.00	

52.00

Part No	WDD 0520 0600 060					
Groove Dimension	ØA	x	ØB	x	L	
	52.00		60.00		4.00	

55.00

Part No	WDD 0550 0630 060					
Groove Dimension	ØA	x	ØB	x	L	
	55.00		63.00		4.00	

56.00

Part No	WDD 0560 0640 060					
Groove Dimension	ØA	x	ØB	x	L	
	56.00		64.00		4.00	

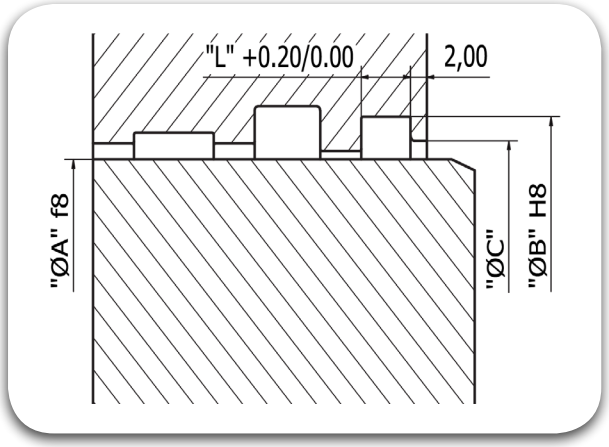

60.00

Part No	WDD 0600 0680 060					
Groove Dimension	ØA	x	ØB	x	L	
	60.00		68.00		4.00	

63.00

Part No	WDD 0630 0710 060					
Groove Dimension	ØA	x	ØB	x	L	
	63.00		71.00		4.00	

65.00

Part No	WDD 0650 0730 060					
Groove Dimension	ØA	x	ØB	x	L	
	65.00		73.00		4.00	

70.00

Part No	WDD 0700 0780 060					
Groove Dimension	ØA	x	ØB	x	L	
	70.00		78.00		4.00	

75.00

Part No	WDD 0750 0830 060					
Groove Dimension	ØA	x	ØB	x	L	
	75.00		83.00		4.00	

80.00

Part No	WDD 0800 0880 060					
Groove Dimension	ØA	x	ØB	x	L	
	80.00		88.00		4.00	

85.00

Part No	WDD 0850 0930 060					
Groove Dimension	ØA	x	ØB	x	L	
	85.00		93.00		4.00	

90.00

Part No	WDD 0900 0980 060					
Groove Dimension	ØA	x	ØB	x	L	
	90.00		98.00		4.00	

95.00

Part No	WDD 0950 1030 060					
Groove Dimension	ØA	x	ØB	x	L	
	95.00		103.00		4.00	

100.00

Part No	WDD 1000 1080 060					
Groove Dimension	ØA	x	ØB	x	L	
	100.00		108.00		4.00	

105.00

Part No	WDD 1050 1170 082					
Groove Dimension	ØA	x	ØB	x	L	
	105.00		117.00		5.50	

110.00

Part No	WDD 1100 1220 082					
Groove Dimension	ØA	x	ØB	x	L	
	110.00		122.00		5.50	

115.00

Part No	WDD 1150 1270 082					
Groove Dimension	ØA	x	ØB	x	L	
	115.00		127.00		5.50	

120.00

Part No	WDD 1200 1320 082					
Groove Dimension	ØA	x	ØB	x	L	
	120.00		132.00		5.50	

125.00

Part No	WDD 1250 1370 082					
Groove Dimension	ØA	x	ØB	x	L	
	125.00		137.00		5.50	

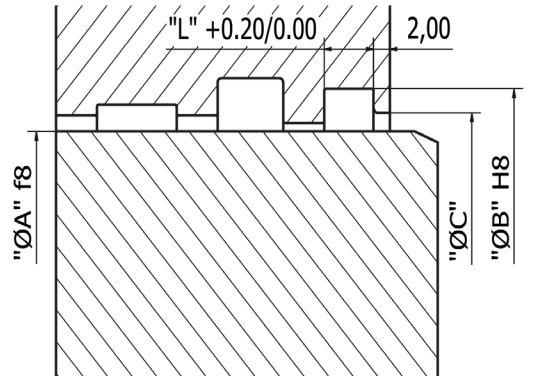

130.00

Part No	WDD 1300 1420 082					
Groove Dimension	ØA	x	ØB	x	L	
	130.00		142.00		5.50	

135.00

Part No	WDD 1350 1470 082					
Groove Dimension	ØA	x	ØB	x	L	
	135.00		147.00		5.50	

140.00

Part No	WDD 1400 1520 082					
Groove Dimension	ØA	x	ØB	x	L	
	140.00		152.00		5.50	

145.00

Part No	WDD 1450 1570 082					
Groove Dimension	ØA	x	ØB	x	L	
	145.00		157.00		5.50	

150.00

Part No	WDD 1500 1620 082					
Groove Dimension	ØA	x	ØB	x	L	
	150.00		162.00		5.50	

160.00

Part No	WDD 1600 1720 082					
Groove Dimension	ØA	x	ØB	x	L	
	160.00		172.00		5.50	

170.00

Part No	WDD 1700 1820 082					
Groove Dimension	ØA	x	ØB	x	L	
	170.00		182.00		5.50	

180.00

Part No	WDD 1800 1920 082					
Groove Dimension	ØA	x	ØB	x	L	
	180.00		192.00		5.50	

200.00

Part No	WDD 2000 2120 082					
Groove Dimension	ØA	x	ØB	x	L	
	200.00		212.00		5.50	

210.00

Part No	WDD 2100 2250 095					
Groove Dimension	ØA	x	ØB	x	L	
	210.00		225.00		6.50	

220.00

Part No	WDD 2200 2350 095					
Groove Dimension	ØA	x	ØB	x	L	
	220.00		235.00		6.50	

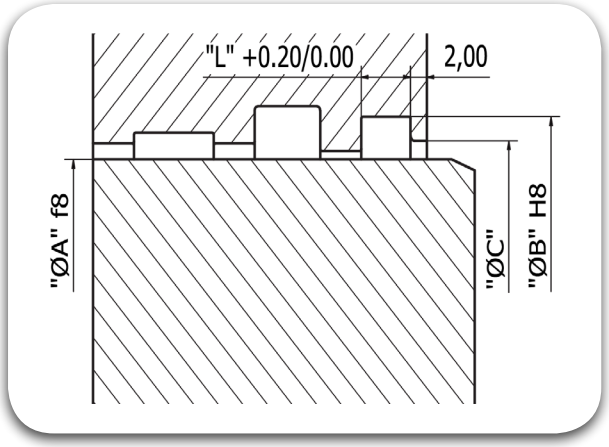

230.00

Part No	WDD 2300 2450 095		
Groove Dimension	ØA	ØB	L
	230.00	245.00	6.50

240.00

Part No	WDD 2400 2550 095		
Groove Dimension	ØA	ØB	L
	240.00	255.00	6.50

250.00

Part No	WDD 2500 2650 095		
Groove Dimension	ØA	ØB	L
	250.00	265.00	6.50

260.00

Part No	WDD 2600 2750 095		
Groove Dimension	ØA	ØB	L
	260.00	275.00	6.50

280.00

Part No	WDD 2800 2950 095		
Groove Dimension	ØA	ØB	L
	280.00	295.00	6.50

300.00

Part No	WDD 3000 3150 095		
Groove Dimension	ØA	ØB	L
	300.00	315.00	6.50

320.00

Part No	WDD 3200 3350 095		
Groove Dimension	ØA	ØB	L
	320.00	335.00	6.50

360.00

Part No	WDD 3600 3750 095		
Groove Dimension	ØA	ØB	L
	360.00	375.00	6.50

400.00

Part No	WDD 4000 4150 095		
Groove Dimension	ØA	ØB	L
	400.00	415.00	6.50

Wiper Seals

WMB

TRIADA
TECHNOLOGIES

#Sealing**Excellence**






Description

The WMB Scraper is a heavy duty Wiper Seal, with an elastomer Inner Lip and a Brass or Stainless Steel Outer Scraping Lip. Even the metal housing of the seal can be supplied in Stainless Steel, on demand. The Brass Lip is radially movable, enabling it to accommodate any radial movement of the Piston Rod. The Elastomer Lip can also be supplied in FKM rubber, for High Temperature or for media compatibility. This style finds application in cylinders where there are possibilities of highly abrasive or hard substrates to settle down, which can damage other type of wiping lips.

Diameter Range	Ø12.00 – Ø300.00 (Larger dia. on request)
Standard material	Main Wiping Element in TRIAFLEX® T591(NBR), Steel casing and External wiping lip in Brass.
Temperature(°C)	-30ºC to 200ºC (Based on Elastomer Material).
Speed	≤ 1.00 m/s
Fluids	Hydraulic fluids (Mineral Oil based).

Material Details

Seal Material	Seal Material / Code	External Wipping Lip Material	Material Code	Casting Material	Material Code
TRIAFLEX®	NBR 90 T591	Brass	B	Cold Rolled Steel	M
TRIAFLEX®	FKM 90 T691	Stainless Steel	S	Stainless Steel	S

Nomenclature

Part No	WMB	1000	1200	090	T591	B	M
	Seal profile	Rod Dia x 10	Groove Dia x 10	Groove Width x 10	Seal Material Code	External Wipping Lip Material Code	Seal Material Code

Groove Details

Rod Diameter Range "ØA"	Chamfer Width "E"
12.00 - 95.00	2.00
100.00 - 300.00	3.00

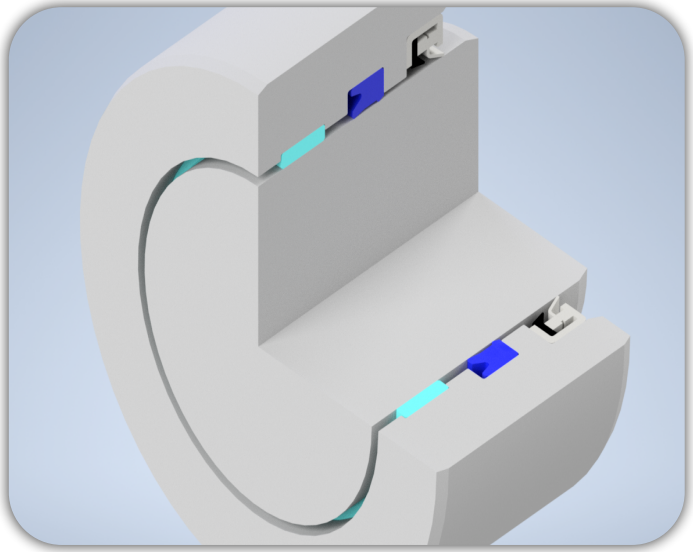

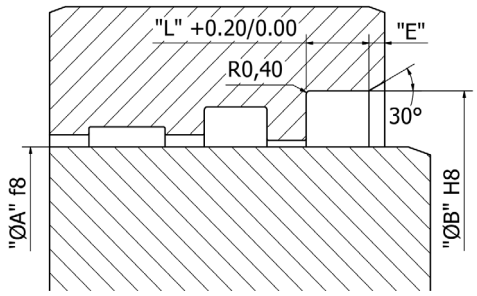

12.00

Part No	WMB 0120 0250 070				
Groove Dimension	ØA	x	ØB	x	L
	12.00		25.00		7.00

14.00

Part No	WMB 0140 0270 070				
Groove Dimension	ØA	x	ØB	x	L
	14.00		27.00		7.00

15.00

Part No	WMB 0150 0280 070				
Groove Dimension	ØA	x	ØB	x	L
	15.00		28.00		7.00

16.00

Part No	WMB 0160 0290 070				
Groove Dimension	ØA	x	ØB	x	L
	16.00		29.00		7.00

18.00

Part No	WMB 0180 0310 070				
Groove Dimension	ØA	x	ØB	x	L
	18.00		31.00		7.00

20.00

Part No	WMB 0200 0330 070				
Groove Dimension	ØA	x	ØB	x	L
	20.00		33.00		7.00

22.00

Part No	WMB 0220 0350 070				
Groove Dimension	ØA	x	ØB	x	L
	22.00		35.00		7.00

25.00

Part No	WMB 0250 0380 070				
Groove Dimension	ØA	x	ØB	x	L
	25.00		38.00		7.00

28.00

Part No	WMB 0280 0410 070				
Groove Dimension	ØA	x	ØB	x	L
	28.00		41.00		7.00

30.00

Part No	WMB 0300 0430 075				
Groove Dimension	ØA	x	ØB	x	L
	30.00		43.00		7.50

32.00

Part No	WMB 0320 0450 075				
Groove Dimension	ØA	x	ØB	x	L
	32.00		45.00		7.50

35.00

Part No	WMB 0350 0480 075				
Groove Dimension	ØA	x	ØB	x	L
	35.00		48.00		7.50

36.00

Part No	WMB 0360 0490 075				
Groove Dimension	ØA	x	ØB	x	L
	36.00		49.00		7.50

38.00

Part No	WMB 0380 0510 075					
Groove Dimension	ØA	x	ØB	x	L	
	38.00		51.00		7.50	

40.00

Part No	WMB 0400 0530 075					
Groove Dimension	ØA	x	ØB	x	L	
	40.00		53.00		7.50	

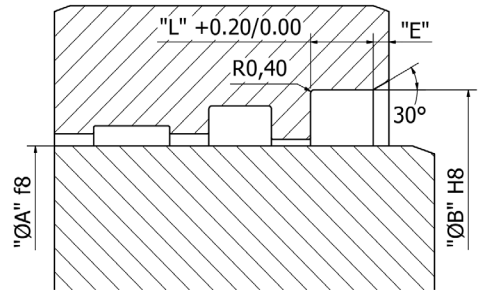

45.00

Part No	WMB 0450 0580 075					
Groove Dimension	ØA	x	ØB	x	L	
	45.00		58.00		7.50	

50.00

Part No	WMB 0500 0640 080					
Groove Dimension	ØA	x	ØB	x	L	
	50.00		64.00		8.00	

50.00

Part No	WMB 0500 0650 079					
Groove Dimension	ØA	x	ØB	x	L	
	50.00		65.00		7.90	

55.00

Part No	WMB 0550 0690 080					
Groove Dimension	ØA	x	ØB	x	L	
	55.00		69.00		8.00	

56.00

Part No	WMB 0560 0700 080					
Groove Dimension	ØA	x	ØB	x	L	
	56.00		70.00		8.00	

58.00

Part No	WMB 0580 0720 080					
Groove Dimension	ØA	x	ØB	x	L	
	58.00		72.00		8.00	

60.00

Part No	WMB 0600 0740 080					
Groove Dimension	ØA	x	ØB	x	L	
	60.00		74.00		8.00	

63.00

Part No	WMB 0630 0770 080					
Groove Dimension	ØA	x	ØB	x	L	
	63.00		77.00		8.00	

65.00

Part No	WMB 0650 0790 080					
Groove Dimension	ØA	x	ØB	x	L	
	65.00		79.00		8.00	

70.00

Part No	WMB 0700 0840 080					
Groove Dimension	ØA	x	ØB	x	L	
	70.00		84.00		8.00	

75.00

Part No	WMB 0750 0890 080					
Groove Dimension	ØA	x	ØB	x	L	
	75.00		89.00		8.00	

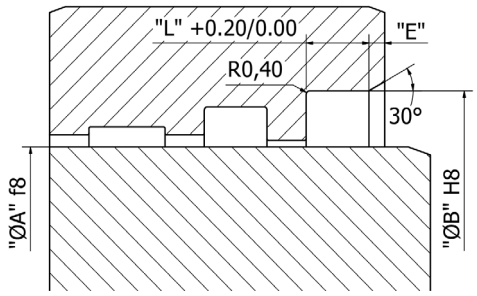

80.00

Part No	WMB 0800 0960 085		
Groove Dimension	ØA	ØB	L
	80.00	96.00	8.50

85.00

Part No	WMB 0850 1010 085		
Groove Dimension	ØA	ØB	L
	85.00	101.00	8.50

90.00

Part No	WMB 0900 1060 085		
Groove Dimension	ØA	ØB	L
	90.00	106.00	8.50

95.00

Part No	WMB 0950 1110 085		
Groove Dimension	ØA	ØB	L
	95.00	111.00	8.50

100.00

Part No	WMB 1000 1200 090		
Groove Dimension	ØA	ØB	L
	100.00	120.00	9.00

110.00

Part No	WMB 1100 1300 090		
Groove Dimension	ØA	ØB	L
	110.00	130.00	9.00

120.00

Part No	WMB 1200 1400 090		
Groove Dimension	ØA	ØB	L
	120.00	140.00	9.00

130.00

Part No	WMB 1300 1500 090		
Groove Dimension	ØA	ØB	L
	130.00	150.00	9.00

140.00

Part No	WMB 1400 1600 090		
Groove Dimension	ØA	ØB	L
	140.00	160.00	9.00

150.00

Part No	WMB 1500 1700 090		
Groove Dimension	ØA	ØB	L
	150.00	170.00	9.00

160.00

Part No	WMB 1600 1800 090		
Groove Dimension	ØA	ØB	L
	160.00	180.00	9.00

170.00

Part No	WMB 1700 1900 090		
Groove Dimension	ØA	ØB	L
	170.00	190.00	9.00

180.00

Part No	WMB 1800 2000 120		
Groove Dimension	ØA	ØB	L
	180.00	200.00	12.00

200.00

Part No	WMB 2000 2300 120					
Groove Dimension	ØA	x	ØB	x	L	
	200.00		230.00		12.00	

210.00

Part No	WMB 2100 2300 120					
Groove Dimension	ØA	x	ØB	x	L	
	210.00		230.00		12.00	

220.00

Part No	WMB 2200 2500 120					
Groove Dimension	ØA	x	ØB	x	L	
	220.00		250.00		12.00	

250.00

Part No	WMB 2500 2800 120					
Groove Dimension	ØA	x	ØB	x	L	
	250.00		280.00		12.00	

300.00

Part No	WMB 3000 3300 120					
Groove Dimension	ØA	x	ØB	x	L	
	300.00		330.00		12.00	

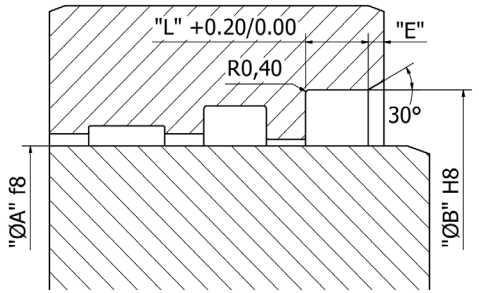

Wiper Seals

WGN

TRIADA
TECHNOLOGIES

#Sealing**Excellence**






Description

The WGN Wiper is a single acting elastomer Wiper, with metal integration. The lip at the outer edge avoids the dust particles entering into the system for axially moving rods, thus eliminating the damage for other seals and internal components. Unlike wpw profile seal this does not have the danger of rust formation of the front face of the seal in assembled condition.

Diameter Range	Ø6.00 – Ø220.00 (Larger dia. on request)
Standard material	TRIAFLEX® T591 (NBR 90) with metal casing.
Temperature(°C)	- 30°C to 120°C
Speed	< 1.00 m/s
Fluids	Mineral Oils.

Material Details

Seal Material	Seal Material / Code
TRIAFLEX®	NBR 90 T591
TRIAFLEX®	FKM 90 T691

Nomenclature

Part No	WGN	1050	1150	070	T591
	Seal profile	Rod Dia x 10	Groove Dia x 10	Groove Width x 10	Seal Material Code

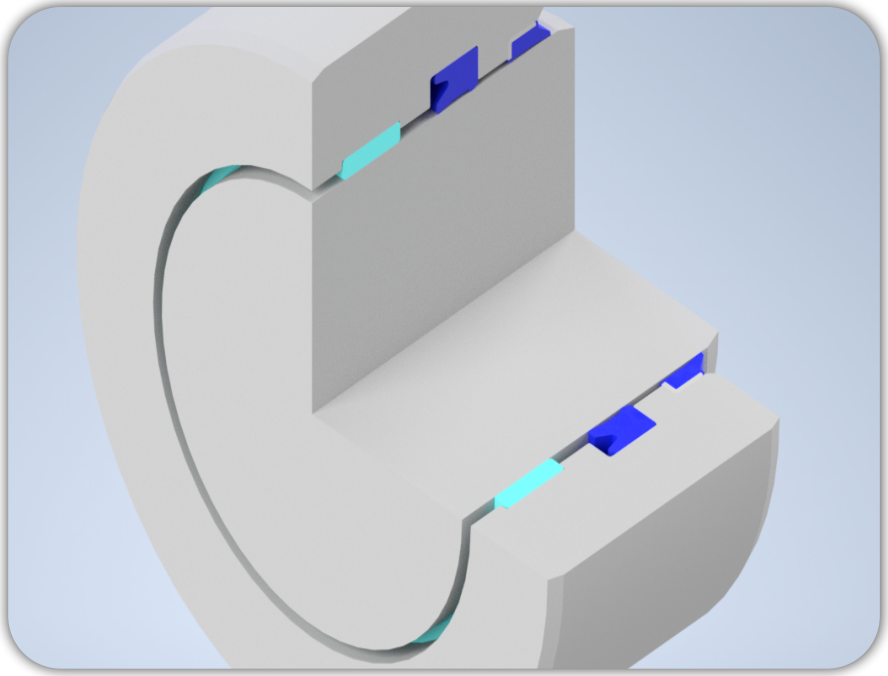

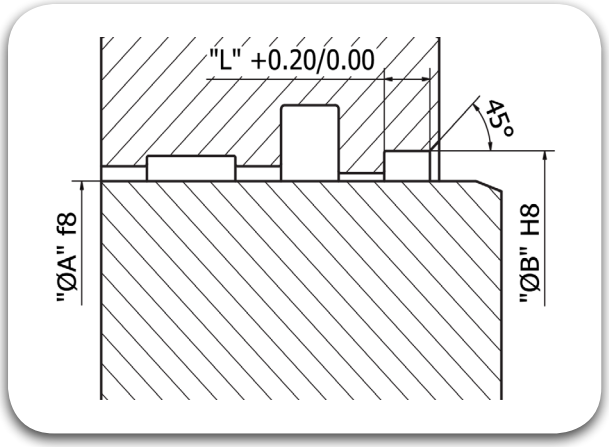

6.00

Part No	WGN 0060 0130 030					
Groove Dimension	ØA	x	ØB	x	L	
	6.00		13.00		3.00	

10.00

Part No	WGN 0100 0160 030					
Groove Dimension	ØA	x	ØB	x	L	
	10.00		16.00		3.00	

10.00

Part No	WGN 0100 0189 029					
Groove Dimension	ØA	x	ØB	x	L	
	10.00		18.90		2.90	

10.00

Part No	WGN 0100 0200 050					
Groove Dimension	ØA	x	ØB	x	L	
	10.00		20.00		5.00	

12.00

Part No	WGN 0120 0180 035					
Groove Dimension	ØA	x	ØB	x	L	
	12.00		18.00		3.50	

12.00

Part No	WGN 0120 0200 040					
Groove Dimension	ØA	x	ØB	x	L	
	12.00		20.00		4.00	

12.00

Part No	WGN 0120 0220 050					
Groove Dimension	ØA	x	ØB	x	L	
	12.00		22.00		5.00	

14.00

Part No	WGN 0140 0200 030					
Groove Dimension	ØA	x	ØB	x	L	
	14.00		20.00		3.00	

14.00

Part No	WGN 0140 0220 030					
Groove Dimension	ØA	x	ØB	x	L	
	14.00		22.00		3.00	

15.00

Part No	WGN 0150 0250 050					
Groove Dimension	ØA	x	ØB	x	L	
	15.00		25.00		5.00	

16.00

Part No	WGN 0160 0220 030					
Groove Dimension	ØA	x	ØB	x	L	
	16.00		22.00		3.00	

16.00

Part No	WGN 0160 0240 050					
Groove Dimension	ØA	x	ØB	x	L	
	16.00		24.00		5.00	

16.00

Part No	WGN 0160 0260 050					
Groove Dimension	ØA	x	ØB	x	L	
	16.00		26.00		5.00	

18.00		ØA	ØB	L
Part No	WGN 0180 0280 050			
Groove Dimension		18.00	28.00	5.00

18.00		ØA	ØB	L
Part No	WGN 0180 0280 070			
Groove Dimension		18.00	28.00	7.00

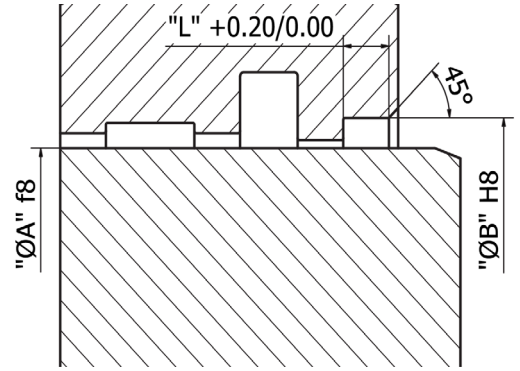

20.00		ØA	ØB	L
Part No	WGN 0200 0260 035			
Groove Dimension		20.00	26.00	3.50

20.00		ØA	ØB	L
Part No	WGN 0200 0280 035			
Groove Dimension		20.00	28.00	3.50

20.00		ØA	ØB	L
Part No	WGN 0200 0280 050			
Groove Dimension		20.00	28.00	5.00

20.00		ØA	ØB	L
Part No	WGN 0200 0300 040			
Groove Dimension		20.00	30.00	4.00

20.00		ØA	ØB	L
Part No	WGN 0200 0300 050			
Groove Dimension		20.00	30.00	5.00

20.00		ØA	ØB	L
Part No	WGN 0200 0300 070			
Groove Dimension		20.00	30.00	7.00

20.00		ØA	ØB	L
Part No	WGN 0200 0350 070			
Groove Dimension		20.00	35.00	7.00

22.00		ØA	ØB	L
Part No	WGN 0220 0280 050			
Groove Dimension		22.00	28.00	5.00

22.00		ØA	ØB	L
Part No	WGN 0220 0300 040			
Groove Dimension		22.00	30.00	4.00

22.00		ØA	ØB	L
Part No	WGN 0220 0320 050			
Groove Dimension		22.00	32.00	5.00

22.00		ØA	ØB	L
Part No	WGN 0220 0320 070			
Groove Dimension		22.00	32.00	7.00

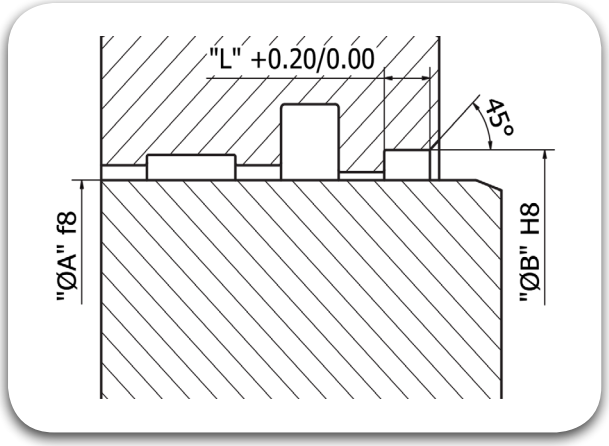

22.00

Part No	WGN 0220 0350 050				
Groove Dimension	ØA	x	ØB	x	L
	22.00		35.00		5.00

24.00

Part No	WGN 0240 0320 050				
Groove Dimension	ØA	x	ØB	x	L
	24.00		32.00		5.00

25.00

Part No	WGN 0250 0320 050				
Groove Dimension	ØA	x	ØB	x	L
	25.00		32.00		5.00

25.00

Part No	WGN 0250 0350 050				
Groove Dimension	ØA	x	ØB	x	L
	25.00		35.00		5.00

25.00

Part No	WGN 0250 0350 070				
Groove Dimension	ØA	x	ØB	x	L
	25.00		35.00		7.00

28.00

Part No	WGN 0280 0380 050				
Groove Dimension	ØA	x	ØB	x	L
	28.00		38.00		5.00

28.00

Part No	WGN 0280 0380 070				
Groove Dimension	ØA	x	ØB	x	L
	28.00		38.00		7.00

28.00

Part No	WGN 0280 0400 070				
Groove Dimension	ØA	x	ØB	x	L
	28.00		40.00		7.00

30.00

Part No	WGN 0300 0360 050				
Groove Dimension	ØA	x	ØB	x	L
	30.00		36.00		5.00

30.00

Part No	WGN 0300 0400 050				
Groove Dimension	ØA	x	ØB	x	L
	30.00		40.00		5.00

30.00

Part No	WGN 0300 0400 070				
Groove Dimension	ØA	x	ØB	x	L
	30.00		40.00		7.00

30.00

Part No	WGN 0300 0450 050				
Groove Dimension	ØA	x	ØB	x	L
	30.00		45.00		5.00

32.00

Part No	WGN 0320 0400 040				
Groove Dimension	ØA	x	ØB	x	L
	32.00		40.00		4.00

32.00

Part No	WGN 0320 0420 050		
Groove Dimension	ØA	ØB	L
	32.00	42.00	5.00

32.00

Part No	WGN 0320 0450 040		
Groove Dimension	ØA	ØB	L
	32.00	45.00	4.00

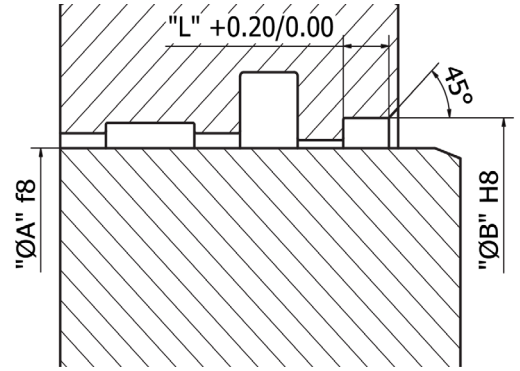

32.00

Part No	WGN 0320 0450 050		
Groove Dimension	ØA	ØB	L
	32.00	45.00	5.00

32.00

Part No	WGN 0320 0450 070		
Groove Dimension	ØA	ØB	L
	32.00	45.00	7.00

33.00

Part No	WGN 0330 0430 050		
Groove Dimension	ØA	ØB	L
	33.00	43.00	5.00

35.00

Part No	WGN 0350 0450 050		
Groove Dimension	ØA	ØB	L
	35.00	45.00	5.00

35.00

Part No	WGN 0350 0450 070		
Groove Dimension	ØA	ØB	L
	35.00	45.00	7.00

35.00

Part No	WGN 0350 0470 070		
Groove Dimension	ØA	ØB	L
	35.00	47.00	7.00

36.00

Part No	WGN 0360 0450 070		
Groove Dimension	ØA	ØB	L
	36.00	45.00	7.00

36.00

Part No	WGN 0360 0460 050		
Groove Dimension	ØA	ØB	L
	36.00	46.00	5.00

36.00

Part No	WGN 0360 0460 070		
Groove Dimension	ØA	ØB	L
	36.00	46.00	7.00

37.00

Part No	WGN 0370 0470 050		
Groove Dimension	ØA	ØB	L
	37.00	47.00	5.00

38.00

Part No	WGN 0380 0480 070		
Groove Dimension	ØA	ØB	L
	38.00	48.00	7.00

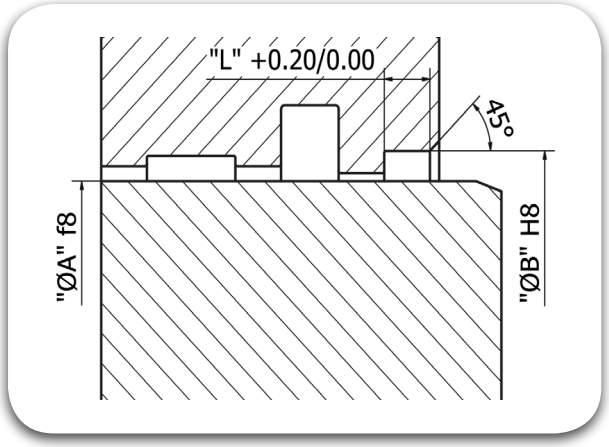

40.00

Part No	WGN 0400 0460 050		
Groove Dimension	ØA	ØB	L
	40.00	46.00	5.00

40.00

Part No	WGN 0400 0500 050		
Groove Dimension	ØA	ØB	L
	40.00	50.00	5.00

40.00

Part No	WGN 0400 0500 070		
Groove Dimension	ØA	ØB	L
	40.00	50.00	7.00

40.00

Part No	WGN 0400 0520 050		
Groove Dimension	ØA	ØB	L
	40.00	52.00	5.00

42.00

Part No	WGN 0420 0520 070		
Groove Dimension	ØA	ØB	L
	42.00	52.00	7.00

45.00

Part No	WGN 0450 0535 050		
Groove Dimension	ØA	ØB	L
	45.00	53.50	5.00

45.00

Part No	WGN 0450 0550 050		
Groove Dimension	ØA	ØB	L
	45.00	55.00	5.00

45.00

Part No	WGN 0450 0550 070		
Groove Dimension	ØA	ØB	L
	45.00	55.00	7.00

45.00

Part No	WGN 0450 0600 070		
Groove Dimension	ØA	ØB	L
	45.00	60.00	7.00

48.00

Part No	WGN 0480 0600 070		
Groove Dimension	ØA	ØB	L
	48.00	60.00	7.00

50.00

Part No	WGN 0500 0560 050		
Groove Dimension	ØA	ØB	L
	50.00	56.00	5.00

50.00

Part No	WGN 0500 0600 050		
Groove Dimension	ØA	ØB	L
	50.00	60.00	5.00

50.00

Part No	WGN 0500 0600 070		
Groove Dimension	ØA	ØB	L
	50.00	60.00	7.00

50.00		ØA	ØB	L
Part No	WGN 0500 0650 050			
Groove Dimension		50.00	65.00	5.00

50.00		ØA	ØB	L
Part No	WGN 0500 0650 070			
Groove Dimension		50.00	65.00	7.00

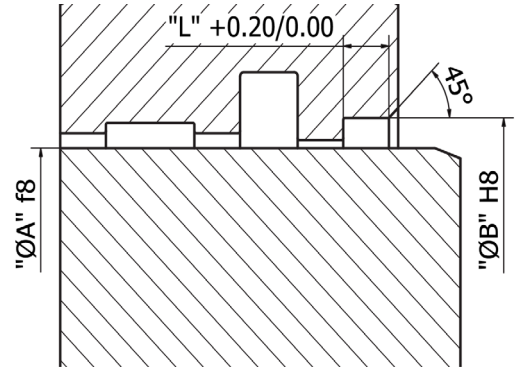

52.00		ØA	ØB	L
Part No	WGN 0520 0620 070			
Groove Dimension		52.00	62.00	7.00

55.00		ØA	ØB	L
Part No	WGN 0550 0630 070			
Groove Dimension		55.00	63.00	7.00

55.00		ØA	ØB	L
Part No	WGN 0550 0650 050			
Groove Dimension		55.00	65.00	5.00

55.00		ØA	ØB	L
Part No	WGN 0550 0650 070			
Groove Dimension		55.00	65.00	7.00

55.00		ØA	ØB	L
Part No	WGN 0550 0700 070			
Groove Dimension		55.00	70.00	7.00

55.00		ØA	ØB	L
Part No	WGN 0550 0800 050			
Groove Dimension		55.00	80.00	5.00

56.00		ØA	ØB	L
Part No	WGN 0560 0650 070			
Groove Dimension		56.00	65.00	7.00

56.00		ØA	ØB	L
Part No	WGN 0560 0660 050			
Groove Dimension		56.00	66.00	5.00

56.00		ØA	ØB	L
Part No	WGN 0560 0660 070			
Groove Dimension		56.00	66.00	7.00

60.00		ØA	ØB	L
Part No	WGN 0600 0700 050			
Groove Dimension		60.00	70.00	5.00

60.00		ØA	ØB	L
Part No	WGN 0600 0700 070			
Groove Dimension		60.00	70.00	7.00

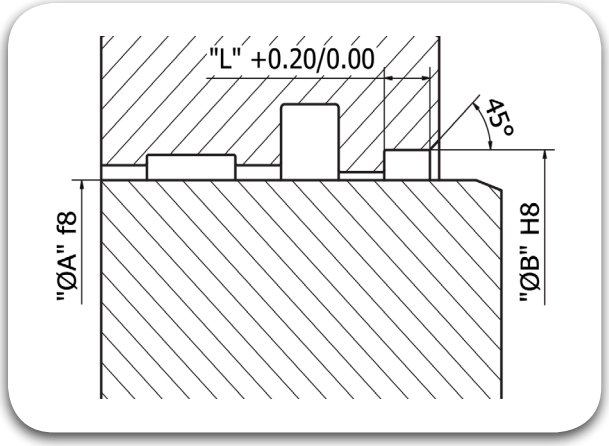

60.00

Part No	WGN 0600 0740 050					
Groove Dimension	ØA	x	ØB	x	L	
	60.00		74.00		5.00	

60.00

Part No	WGN 0600 0750 070					
Groove Dimension	ØA	x	ØB	x	L	
	60.00		75.00		7.00	

60.00

Part No	WGN 0600 0800 070					
Groove Dimension	ØA	x	ØB	x	L	
	60.00		80.00		7.00	

63.00

Part No	WGN 0630 0730 070					
Groove Dimension	ØA	x	ØB	x	L	
	63.00		73.00		7.00	

63.00

Part No	WGN 0630 0750 070					
Groove Dimension	ØA	x	ØB	x	L	
	63.00		75.00		7.00	

63.00

Part No	WGN 0630 0830 050					
Groove Dimension	ØA	x	ØB	x	L	
	63.00		83.00		5.00	

65.00

Part No	WGN 0650 0750 070					
Groove Dimension	ØA	x	ØB	x	L	
	65.00		75.00		7.00	

70.00

Part No	WGN 0700 0800 050					
Groove Dimension	ØA	x	ØB	x	L	
	70.00		80.00		5.00	

70.00

Part No	WGN 0700 0800 070					
Groove Dimension	ØA	x	ØB	x	L	
	70.00		80.00		7.00	

75.00

Part No	WGN 0750 0850 070					
Groove Dimension	ØA	x	ØB	x	L	
	75.00		85.00		7.00	

75.00

Part No	WGN 0750 0870 050					
Groove Dimension	ØA	x	ØB	x	L	
	75.00		87.00		5.00	

80.00

Part No	WGN 0800 0900 070					
Groove Dimension	ØA	x	ØB	x	L	
	80.00		90.00		7.00	

84.00

Part No	WGN 0840 0940 050					
Groove Dimension	ØA	x	ØB	x	L	
	84.00		94.00		5.00	

85.00

Part No	WGN 0850 0950 070		
Groove Dimension	ØA	ØB	L
	85.00	95.00	7.00

90.00

Part No	WGN 0900 1000 050		
Groove Dimension	ØA	ØB	L
	90.00	100.00	5.00

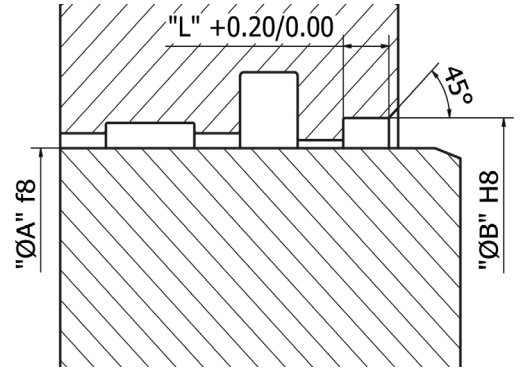

90.00

Part No	WGN 0900 1000 070		
Groove Dimension	ØA	ØB	L
	90.00	100.00	7.00

95.00

Part No	WGN 0950 1050 070		
Groove Dimension	ØA	ØB	L
	95.00	105.00	7.00

100.00

Part No	WGN 1000 1100 050		
Groove Dimension	ØA	ØB	L
	100.00	110.00	5.00

100.00

Part No	WGN 1000 1100 070		
Groove Dimension	ØA	ØB	L
	100.00	110.00	7.00

100.00

Part No	WGN 1000 1150 080		
Groove Dimension	ØA	ØB	L
	100.00	115.00	8.00

105.00

Part No	WGN 1050 1150 070		
Groove Dimension	ØA	ØB	L
	105.00	115.00	7.00

110.00

Part No	WGN 1100 1200 070		
Groove Dimension	ØA	ØB	L
	110.00	120.00	7.00

110.00

Part No	WGN 1100 1250 090		
Groove Dimension	ØA	ØB	L
	110.00	125.00	9.00

115.00

Part No	WGN 1150 1250 070		
Groove Dimension	ØA	ØB	L
	115.00	125.00	7.00

120.00

Part No	WGN 1200 1300 070		
Groove Dimension	ØA	ØB	L
	120.00	130.00	7.00

123.00

Part No	WGN 1230 1470 090		
Groove Dimension	ØA	ØB	L
	123.00	147.00	9.00

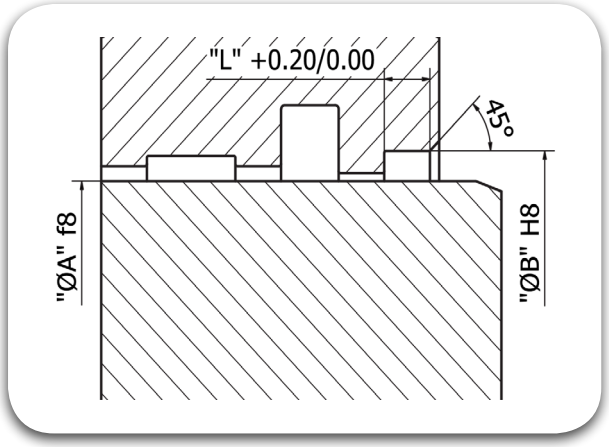

125.00

Part No	WGN 1250 1350 070		
Groove Dimension	ØA	ØB	L
	125.00	135.00	7.00

125.00

Part No	WGN 1250 1400 070		
Groove Dimension	ØA	ØB	L
	125.00	140.00	7.00

125.00

Part No	WGN 1250 1400 090		
Groove Dimension	ØA	ØB	L
	125.00	140.00	9.00

130.00

Part No	WGN 1300 1450 090		
Groove Dimension	ØA	ØB	L
	130.00	145.00	9.00

135.00

Part No	WGN 1350 1450 070		
Groove Dimension	ØA	ØB	L
	135.00	145.00	7.00

135.00

Part No	WGN 1350 1500 090		
Groove Dimension	ØA	ØB	L
	135.00	150.00	9.00

140.00

Part No	WGN 1400 1500 070		
Groove Dimension	ØA	ØB	L
	140.00	150.00	7.00

140.00

Part No	WGN 1400 1550 090		
Groove Dimension	ØA	ØB	L
	140.00	155.00	9.00

150.00

Part No	WGN 1500 1650 090		
Groove Dimension	ØA	ØB	L
	150.00	165.00	9.00

160.00

Part No	WGN 1600 1750 090		
Groove Dimension	ØA	ØB	L
	160.00	175.00	9.00

170.00

Part No	WGN 1700 1850 100		
Groove Dimension	ØA	ØB	L
	170.00	185.00	10.00

180.00

Part No	WGN 1800 1950 100		
Groove Dimension	ØA	ØB	L
	180.00	195.00	10.00

200.00

Part No	WGN 2000 2200 120		
Groove Dimension	ØA	ØB	L
	200.00	220.00	12.00

210.00

Part No	WGN 2100 2300 120				
Groove Dimension	ØA	x	ØB	x	L
	210.00		230.00		12.00

220.00

Part No	WGN 2200 2400 120				
Groove Dimension	ØA	x	ØB	x	L
	220.00		240.00		12.00

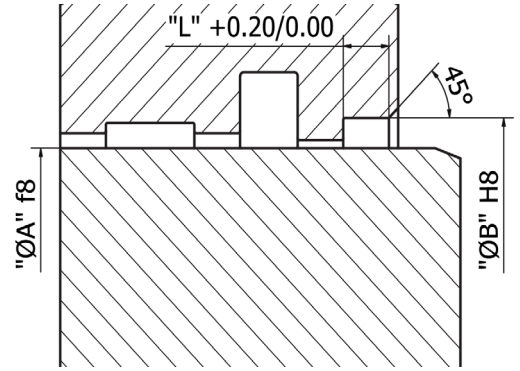

Wiper Seals

WRP

TRIADA
TECHNOLOGIES

#Sealing**Excellence**






Description

The WRP Scraper is an easy to install snap in type Wiper Seals in TRIATHANE® material (Poly-Urethane), which exhibits improved wiping characteristics against harsh environments.

Diameter Range	Ø4.00 – Ø300.00 (Larger dia. on request)
Standard material	TRIATHANE® T479 (Poly-Urethane)
Temperature(°C)	-35ºC to 110ºC.
Speed	≤ 0.80 m/s
Fluids	Hydraulic fluids (Mineral Oil based).

Material Details

Seal Material	Seal Material / Code
TRIATHANE®	Poly-Urethane T479

Nomenclature

Part No	WRP	1080	1166	053	T479
	Seal profile	Rod Dia x 10	Groove Dia x 10	Groove Width x 10	Seal Material Code

Groove Details

Groove Width "L"	Mouth Diameter "ØC"
3.80mm	'ØA' + 3.00mm
5.30mm	'ØA' + 3.00mm
6.30mm	'ØA' + 4.00mm
7.10mm	'ØA' + 6.00mm
10.10mm	'ØA' + 8.00mm

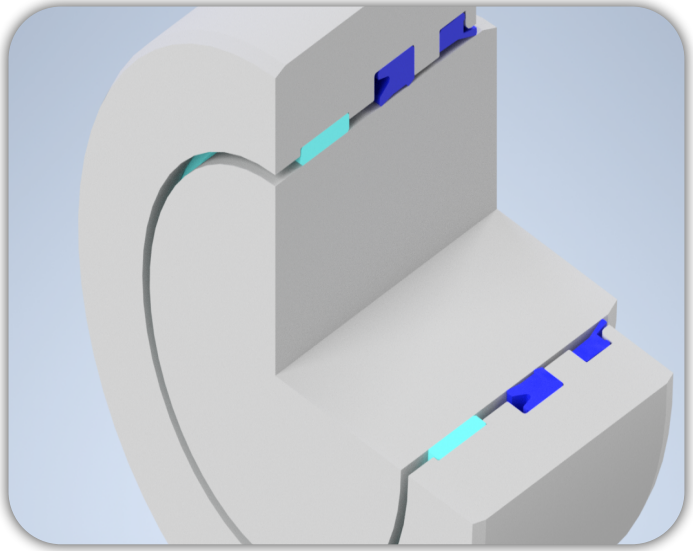

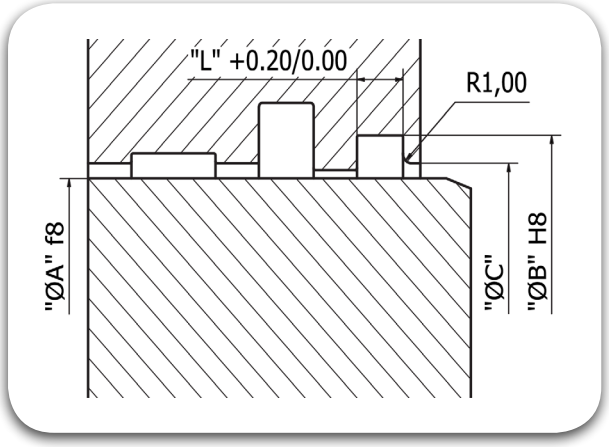

4.00

Part No	WRP 0040 0120 030				
Groove Dimension	ØA	x	ØB	x	L
	4.00		12.00		3.00

5.00

Part No	WRP 0050 0120 028				
Groove Dimension	ØA	x	ØB	x	L
	5.00		12.00		2.80

6.00

Part No	WRP 0060 0120 030				
Groove Dimension	ØA	x	ØB	x	L
	6.00		12.00		3.00

8.00

Part No	WRP 0080 0146 038				
Groove Dimension	ØA	x	ØB	x	L
	8.00		14.60		3.80

9.00

Part No	WRP 0090 0130 025				
Groove Dimension	ØA	x	ØB	x	L
	9.00		13.00		2.50

10.00

Part No	WRP 0100 0116 038				
Groove Dimension	ØA	x	ØB	x	L
	10.00		16.60		3.80

10.00

Part No	WRP 0100 0150 038				
Groove Dimension	ØA	x	ØB	x	L
	10.00		15.00		3.80

12.00

Part No	WRP 0120 0186 038				
Groove Dimension	ØA	x	ØB	x	L
	12.00		18.60		3.80

13.00

Part No	WRP 0130 0196 038				
Groove Dimension	ØA	x	ØB	x	L
	13.00		19.60		3.80

14.00

Part No	WRP 0140 0206 038				
Groove Dimension	ØA	x	ØB	x	L
	14.00		20.60		3.80

15.00

Part No	WRP 0150 0216 038				
Groove Dimension	ØA	x	ØB	x	L
	15.00		21.60		3.80

16.00

Part No	WRP 0160 0226 038				
Groove Dimension	ØA	x	ØB	x	L
	16.00		22.60		3.80

16.00

Part No	WRP 0160 0225 030				
Groove Dimension	ØA	x	ØB	x	L
	16.00		22.50		3.00

17.00

Part No	WRP 0170 0236 038					
Groove Dimension	ØA	x	ØB	x	L	
	17.00		23.60		3.80	

18.00

Part No	WRP 0180 0246 038					
Groove Dimension	ØA	x	ØB	x	L	
	18.00		24.60		3.80	

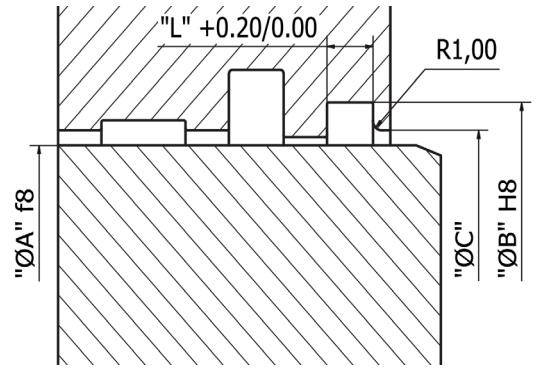

20.00

Part No	WRP 0200 0286 053					
Groove Dimension	ØA	x	ØB	x	L	
	20.00		28.60		5.30	

20.00

Part No	WRP 0200 0260 034					
Groove Dimension	ØA	x	ØB	x	L	
	20.00		26.00		3.40	

22.00

Part No	WRP 0220 0306 053					
Groove Dimension	ØA	x	ØB	x	L	
	22.00		30.60		5.30	

22.00

Part No	WRP 0220 0306 022					
Groove Dimension	ØA	x	ØB	x	L	
	22.00		30.60		2.20	

24.00

Part No	WRP 0240 0326 053					
Groove Dimension	ØA	x	ØB	x	L	
	24.00		32.60		5.30	

24.00

Part No	WRP 0240 0326 022					
Groove Dimension	ØA	x	ØB	x	L	
	24.00		32.60		2.20	

25.00

Part No	WRP 0250 0336 053					
Groove Dimension	ØA	x	ØB	x	L	
	25.00		33.60		5.30	

28.00

Part No	WRP 0280 0366 053					
Groove Dimension	ØA	x	ØB	x	L	
	28.00		36.60		5.30	

30.00

Part No	WRP 0300 0386 053					
Groove Dimension	ØA	x	ØB	x	L	
	30.00		38.60		5.30	

30.00

Part No	WRP 0300 0400 030					
Groove Dimension	ØA	x	ØB	x	L	
	30.00		40.00		3.00	

32.00

Part No	WRP 0320 0406 053					
Groove Dimension	ØA	x	ØB	x	L	
	32.00		40.60		5.30	

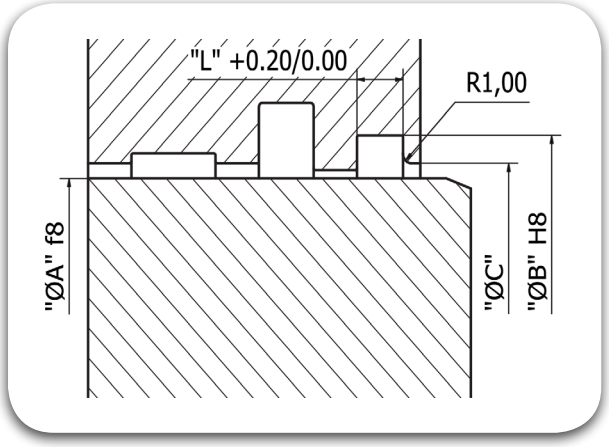

32.00

Part No	WRP 0320 0400 037		
Groove Dimension	ØA	ØB	L
	32.00	40.00	3.70

35.00

Part No	WRP 0350 0436 053		
Groove Dimension	ØA	ØB	L
	35.00	43.60	5.30

35.00

Part No	WRP 0350 0436 050		
Groove Dimension	ØA	ØB	L
	35.00	43.60	5.00

35.00

Part No	WRP 0350 0450 040		
Groove Dimension	ØA	ØB	L
	35.00	45.00	4.00

36.00

Part No	WRP 0360 0446 053		
Groove Dimension	ØA	ØB	L
	36.00	44.60	5.30

38.00

Part No	WRP 0380 0466 053		
Groove Dimension	ØA	ØB	L
	38.00	46.60	5.30

38.00

Part No	WRP 0380 0485 048		
Groove Dimension	ØA	ØB	L
	38.00	48.50	4.80

40.00

Part No	WRP 0400 0486 053		
Groove Dimension	ØA	ØB	L
	40.00	48.60	5.30

42.00

Part No	WRP 0420 0506 053		
Groove Dimension	ØA	ØB	L
	42.00	50.60	5.30

45.00

Part No	WRP 0450 0536 053		
Groove Dimension	ØA	ØB	L
	45.00	53.60	5.30

45.00

Part No	WRP 0450 0556 053		
Groove Dimension	ØA	ØB	L
	45.00	55.60	5.30

45.00

Part No	WRP 0450 0600 042		
Groove Dimension	ØA	ØB	L
	45.00	60.00	4.20

46.00

Part No	WRP 0460 0546 053		
Groove Dimension	ØA	ØB	L
	46.00	54.60	5.30

48.00

Part No	WRP 0480 0566 053					
Groove Dimension	ØA	x	ØB	x	L	
	48.00		56.60		5.30	

50.00

Part No	WRP 0500 0586 053					
Groove Dimension	ØA	x	ØB	x	L	
	50.00		58.60		5.30	

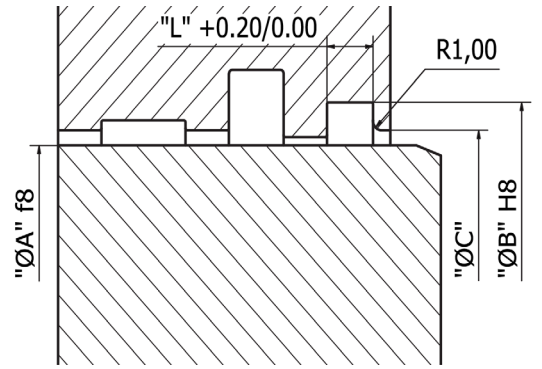

50.00

Part No	WRP 0500 0606 053					
Groove Dimension	ØA	x	ØB	x	L	
	50.00		60.60		5.30	

50.00

Part No	WRP 0500 0655 042					
Groove Dimension	ØA	x	ØB	x	L	
	50.00		65.50		4.20	

53.00

Part No	WRP 0530 0616 053					
Groove Dimension	ØA	x	ØB	x	L	
	53.00		61.60		5.30	

55.00

Part No	WRP 0550 0636 053					
Groove Dimension	ØA	x	ØB	x	L	
	55.00		63.60		5.30	

55.00

Part No	WRP 0550 0656 053					
Groove Dimension	ØA	x	ØB	x	L	
	55.00		65.60		5.30	

56.00

Part No	WRP 0560 0646 053					
Groove Dimension	ØA	x	ØB	x	L	
	56.00		64.60		5.30	

56.00

Part No	WRP 0560 0666 053					
Groove Dimension	ØA	x	ØB	x	L	
	56.00		66.60		5.30	

60.00

Part No	WRP 0600 0686 053					
Groove Dimension	ØA	x	ØB	x	L	
	60.00		68.60		5.30	

60.00

Part No	WRP 0600 0706 055					
Groove Dimension	ØA	x	ØB	x	L	
	60.00		70.60		5.50	

60.00

Part No	WRP 0600 0706 053					
Groove Dimension	ØA	x	ØB	x	L	
	60.00		70.60		5.30	

61.00

Part No	WRP 0610 0690 053					
Groove Dimension	ØA	x	ØB	x	L	
	61.00		69.00		5.30	

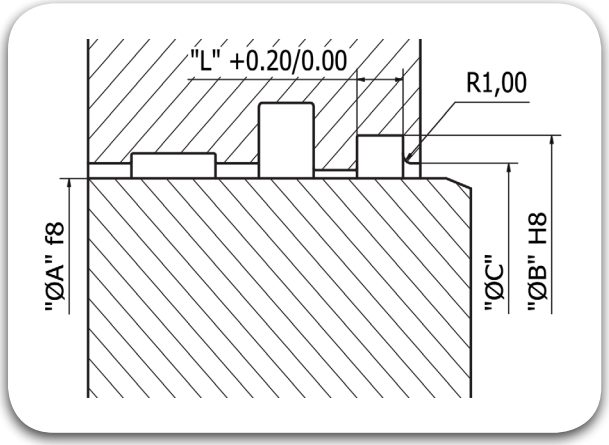

63.00

Part No	WRP 0630 0716 053				
Groove Dimension	ØA	x	ØB	x	L
	63.00		71.60		5.30

63.00

Part No	WRP 0630 0736 053				
Groove Dimension	ØA	x	ØB	x	L
	63.00		73.60		5.30

65.00

Part No	WRP 0650 0736 053				
Groove Dimension	ØA	x	ØB	x	L
	65.00		73.60		5.30

65.00

Part No	WRP 0650 0766 060				
Groove Dimension	ØA	x	ØB	x	L
	65.00		76.60		6.00

65.00

Part No	WRP 0650 0756 053				
Groove Dimension	ØA	x	ØB	x	L
	65.00		75.60		5.30

68.00

Part No	WRP 0680 0760 053				
Groove Dimension	ØA	x	ØB	x	L
	68.00		76.00		5.30

70.00

Part No	WRP 0700 0786 053				
Groove Dimension	ØA	x	ØB	x	L
	70.00		78.60		5.30

70.00

Part No	WRP 0700 0826 071				
Groove Dimension	ØA	x	ØB	x	L
	70.00		82.60		7.10

70.00

Part No	WRP 0700 0800 050				
Groove Dimension	ØA	x	ØB	x	L
	70.00		80.00		5.00

70.00

Part No	WRP 0700 0800 063				
Groove Dimension	ØA	x	ØB	x	L
	70.00		80.00		6.30

70.00

Part No	WRP 0700 0855 053				
Groove Dimension	ØA	x	ØB	x	L
	70.00		80.55		5.30

73.00

Part No	WRP 0730 0816 053				
Groove Dimension	ØA	x	ØB	x	L
	73.00		81.60		5.30

73.00

Part No	WRP 0730 0836 073				
Groove Dimension	ØA	x	ØB	x	L
	73.00		83.60		7.30

75.00

Part No	WRP 0750 0836 053		
Groove Dimension	ØA	ØB	L
	75.00	83.60	5.30

75.00

Part No	WRP 0750 0872 071		
Groove Dimension	ØA	ØB	L
	75.00	87.20	7.10

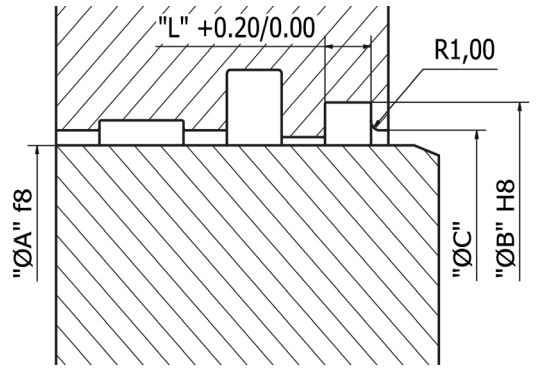

76.00

Part No	WRP 0760 0840 053		
Groove Dimension	ØA	ØB	L
	76.00	84.00	5.30

78.00

Part No	WRP 0780 0922 071		
Groove Dimension	ØA	ØB	L
	78.00	92.20	7.10

78.00

Part No	WRP 0780 0860 050		
Groove Dimension	ØA	ØB	L
	78.00	86.00	5.00

78.00

Part No	WRP 0780 0886 055		
Groove Dimension	ØA	ØB	L
	78.00	88.60	5.50

80.00

Part No	WRP 0800 0886 053		
Groove Dimension	ØA	ØB	L
	80.00	88.60	5.30

80.00

Part No	WRP 0800 0992 071		
Groove Dimension	ØA	ØB	L
	80.00	92.20	7.10

80.00

Part No	WRP 0800 0955 053		
Groove Dimension	ØA	ØB	L
	80.00	90.55	5.30

85.00

Part No	WRP 0850 0972 071		
Groove Dimension	ØA	ØB	L
	85.00	97.20	7.10

85.00

Part No	WRP 0850 0936 053		
Groove Dimension	ØA	ØB	L
	85.00	93.60	5.30

88.00

Part No	WRP 0880 0960 053		
Groove Dimension	ØA	ØB	L
	88.00	96.00	5.30

90.00

Part No	WRP 0900 1022 071		
Groove Dimension	ØA	ØB	L
	90.00	102.20	7.10

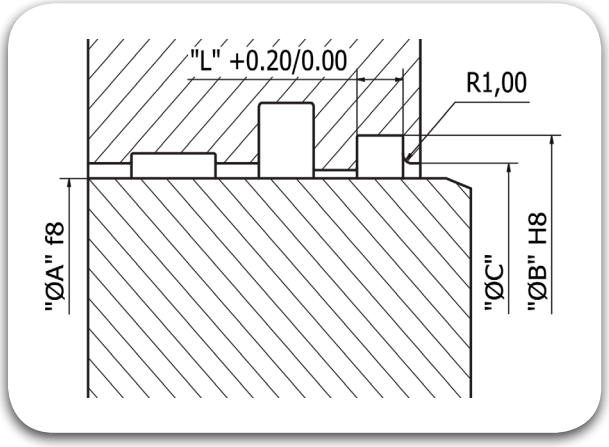

90.00

Part No	WRP 0900 0986 053				
Groove Dimension	ØA	x	ØB	x	L
	90.00		98.60		5.30

91.00

Part No	WRP 0910 0990 053				
Groove Dimension	ØA	x	ØB	x	L
	91.00		99.00		5.30

92.00

Part No	WRP 0920 1036 055				
Groove Dimension	ØA	x	ØB	x	L
	92.00		103.60		5.50

95.00

Part No	WRP 0950 1072 071				
Groove Dimension	ØA	x	ØB	x	L
	95.00		107.20		7.10

95.00

Part No	WRP 0950 1036 053				
Groove Dimension	ØA	x	ØB	x	L
	95.00		103.60		5.30

97.00

Part No	WRP 0970 1056 050				
Groove Dimension	ØA	x	ØB	x	L
	97.00		105.60		5.00

99.00

Part No	WRP 0990 1096 055				
Groove Dimension	ØA	x	ØB	x	L
	99.00		109.60		5.50

100.00

Part No	WRP 1000 1122 071				
Groove Dimension	ØA	x	ØB	x	L
	100.00		112.20		7.10

100.00

Part No	WRP 1000 1086 053				
Groove Dimension	ØA	x	ØB	x	L
	100.00		108.60		5.30

105.00

Part No	WRP 1050 1172 071				
Groove Dimension	ØA	x	ØB	x	L
	105.00		117.20		7.10

105.00

Part No	WRP 1050 1136 053				
Groove Dimension	ØA	x	ØB	x	L
	105.00		113.60		5.30

107.00

Part No	WRP 1070 1150 053				
Groove Dimension	ØA	x	ØB	x	L
	107.00		115.00		5.30

108.00

Part No	WRP 1080 1166 053				
Groove Dimension	ØA	x	ØB	x	L
	108.00		116.60		5.30

110.00

Part No	WRP 1100 1222 071		
Groove Dimension	ØA	ØB	L
	110.00	122.20	7.10

110.00

Part No	WRP 1100 1186 053		
Groove Dimension	ØA	ØB	L
	110.00	118.60	5.30

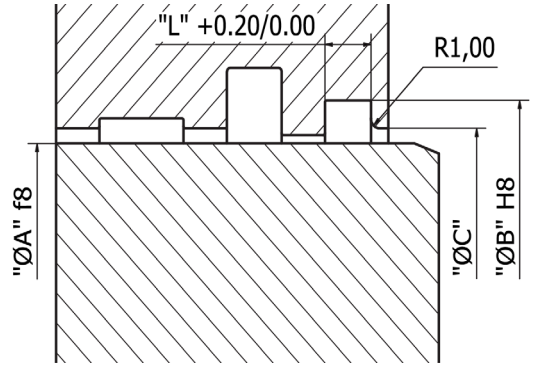

112.00

Part No	WRP 1120 1242 071		
Groove Dimension	ØA	ØB	L
	112.00	124.20	7.10

115.00

Part No	WRP 1150 1272 071		
Groove Dimension	ØA	ØB	L
	115.00	127.20	7.10

115.00

Part No	WRP 1150 1236 053		
Groove Dimension	ØA	ØB	L
	115.00	123.60	5.30

118.00

Part No	WRP 1180 1266 053		
Groove Dimension	ØA	ØB	L
	118.00	126.60	5.30

120.00

Part No	WRP 1200 1322 071		
Groove Dimension	ØA	ØB	L
	120.00	132.20	7.10

120.00

Part No	WRP 1200 1306 055		
Groove Dimension	ØA	ØB	L
	120.00	130.60	5.50

120.00

Part No	WRP 1200 1286 053		
Groove Dimension	ØA	ØB	L
	120.00	128.60	5.30

125.00

Part No	WRP 1250 1372 071		
Groove Dimension	ØA	ØB	L
	125.00	137.20	7.10

125.00

Part No	WRP 1250 1336 053		
Groove Dimension	ØA	ØB	L
	125.00	133.60	5.30

125.00

Part No	WRP 1250 1402 101		
Groove Dimension	ØA	ØB	L
	125.00	140.20	10.10

126.00

Part No	WRP 1260 1340 053		
Groove Dimension	ØA	ØB	L
	126.00	134.00	5.30

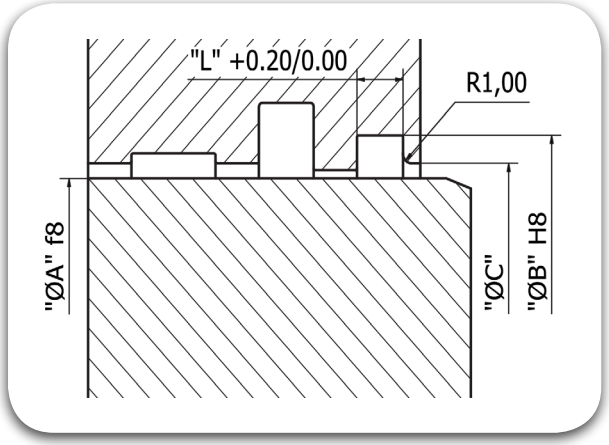

128.00

Part No	WRP 1280 1402 071					
Groove Dimension	ØA	x	ØB	x	L	
	128.00		140.20		7.10	

130.00

Part No	WRP 1300 1422 071					
Groove Dimension	ØA	x	ØB	x	L	
	130.00		142.20		7.10	

130.00

Part No	WRP 1300 1386 053					
Groove Dimension	ØA	x	ØB	x	L	
	130.00		138.60		5.30	

135.00

Part No	WRP 1350 1472 071					
Groove Dimension	ØA	x	ØB	x	L	
	135.00		147.20		7.10	

140.00

Part No	WRP 1400 1522 071					
Groove Dimension	ØA	x	ØB	x	L	
	140.00		152.20		7.10	

140.00

Part No	WRP 1400 1550 090					
Groove Dimension	ØA	x	ØB	x	L	
	140.00		155.00		9.00	

140.00

Part No	WRP 1400 1486 060					
Groove Dimension	ØA	x	ØB	x	L	
	140.00		148.60		6.00	

140.00

Part No	WRP 1400 1552 101					
Groove Dimension	ØA	x	ØB	x	L	
	140.00		155.20		10.10	

140.00

Part No	WRP 1400 1486 053					
Groove Dimension	ØA	x	ØB	x	L	
	140.00		148.60		5.30	

141.00

Part No	WRP 1410 1516 055					
Groove Dimension	ØA	x	ØB	x	L	
	141.00		151.60		5.50	

143.00

Part No	WRP 1430 1510 050					
Groove Dimension	ØA	x	ØB	x	L	
	143.00		151.00		5.00	

145.00

Part No	WRP 1450 1572 071					
Groove Dimension	ØA	x	ØB	x	L	
	145.00		157.20		7.10	

150.00

Part No	WRP 1500 1622 071					
Groove Dimension	ØA	x	ØB	x	L	
	150.00		162.20		7.10	

150.00

Part No	WRP 1500 1586 053					
Groove Dimension	ØA	x	ØB	x	L	
	150.00		158.60		5.30	

150.00

Part No	WRP 1500 1652 101					
Groove Dimension	ØA	x	ØB	x	L	
	150.00		165.20		10.10	

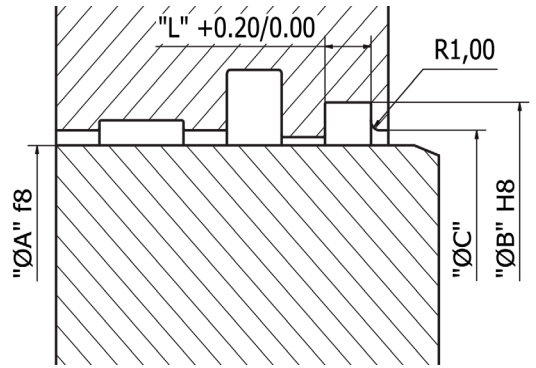

155.00

Part No	WRP 1550 1636 053					
Groove Dimension	ØA	x	ØB	x	L	
	155.00		163.60		5.30	

160.00

Part No	WRP 1600 1752 101					
Groove Dimension	ØA	x	ØB	x	L	
	160.00		175.20		10.10	

160.00

Part No	WRP 1600 1722 071					
Groove Dimension	ØA	x	ØB	x	L	
	160.00		172.20		7.10	

160.00

Part No	WRP 1600 1686 053					
Groove Dimension	ØA	x	ØB	x	L	
	160.00		168.60		5.30	

162.00

Part No	WRP 1620 1726 055					
Groove Dimension	ØA	x	ØB	x	L	
	162.00		172.60		5.50	

165.00

Part No	WRP 1650 1802 101					
Groove Dimension	ØA	x	ØB	x	L	
	165.00		180.20		10.10	

170.00

Part No	WRP 1700 1852 101					
Groove Dimension	ØA	x	ØB	x	L	
	170.00		185.20		10.10	

170.00

Part No	WRP 1700 1786 053					
Groove Dimension	ØA	x	ØB	x	L	
	170.00		178.60		5.30	

180.00

Part No	WRP 1800 1952 101					
Groove Dimension	ØA	x	ØB	x	L	
	180.00		195.20		10.10	

180.00

Part No	WRP 1800 1886 053					
Groove Dimension	ØA	x	ØB	x	L	
	180.00		188.60		5.30	

180.00

Part No	WRP 1800 2000 070					
Groove Dimension	ØA	x	ØB	x	L	
	180.00		200.00		7.00	

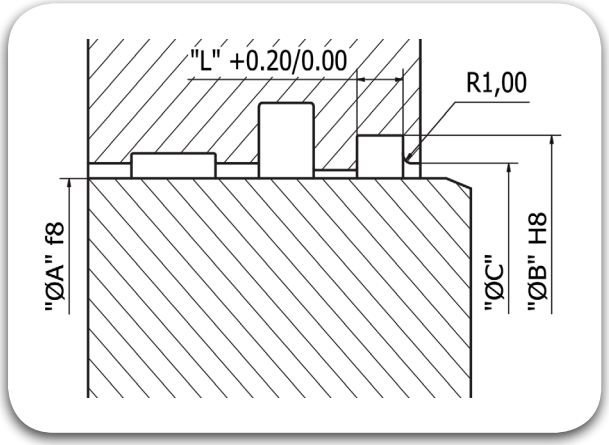

180.00

Part No	WRP 1800 2000 120					
Groove Dimension	ØA	x	ØB	x	L	
	180.00		200.00		10.20	

183.00

Part No	WRP 1830 1936 055					
Groove Dimension	ØA	x	ØB	x	L	
	183.00		193.60		5.50	

185.00

Part No	WRP 1850 1936 053					
Groove Dimension	ØA	x	ØB	x	L	
	185.00		193.60		5.30	

190.00

Part No	WRP 1900 2052 101					
Groove Dimension	ØA	x	ØB	x	L	
	190.00		205.20		10.10	

190.00

Part No	WRP 1900 2100 101					
Groove Dimension	ØA	x	ØB	x	L	
	190.00		210.00		10.10	

190.00

Part No	WRP 1900 1986 053					
Groove Dimension	ØA	x	ØB	x	L	
	190.00		198.60		5.30	

200.00

Part No	WRP 2000 2152 101					
Groove Dimension	ØA	x	ØB	x	L	
	200.00		215.20		10.10	

200.00

Part No	WRP 2000 2150 095					
Groove Dimension	ØA	x	ØB	x	L	
	200.00		215.00		9.50	

200.00

Part No	WRP 2000 2200 102					
Groove Dimension	ØA	x	ØB	x	L	
	200.00		220.00		10.20	

200.00

Part No	WRP 2000 2086 053					
Groove Dimension	ØA	x	ØB	x	L	
	200.00		208.60		5.30	

205.00

Part No	WRP 2050 2136 053					
Groove Dimension	ØA	x	ØB	x	L	
	205.00		213.60		5.30	

207.00

Part No	WRP 2070 2176 055					
Groove Dimension	ØA	x	ØB	x	L	
	207.00		217.60		5.50	

210.00

Part No	WRP 2100 2252 101					
Groove Dimension	ØA	x	ØB	x	L	
	210.00		225.20		10.10	

220.00

Part No	WRP 2200 2352 101		
Groove Dimension	ØA	ØB	L
	220.00	235.20	10.10

220.00

Part No	WRP 2200 2400 101		
Groove Dimension	ØA	ØB	L
	220.00	240.00	10.10

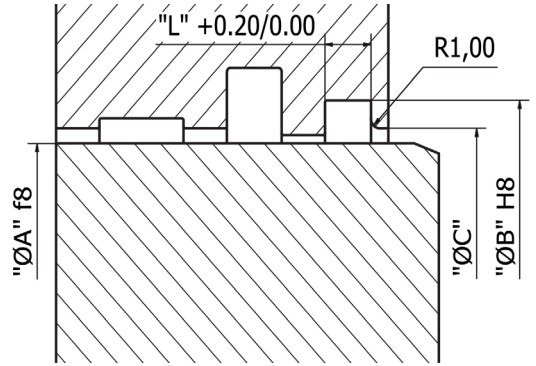

221.00

Part No	WRP 2210 2300 051		
Groove Dimension	ØA	ØB	L
	221.00	230.00	5.10

228.00

Part No	WRP 2280 2366 053		
Groove Dimension	ØA	ØB	L
	228.00	236.60	5.30

230.00

Part No	WRP 2300 2452 101		
Groove Dimension	ØA	ØB	L
	230.00	245.20	10.10

240.00

Part No	WRP 2400 2552 101		
Groove Dimension	ØA	ØB	L
	240.00	255.20	10.10

250.00

Part No	WRP 2500 2652 101		
Groove Dimension	ØA	ØB	L
	250.00	265.20	10.10

260.00

Part No	WRP 2600 2752 101		
Groove Dimension	ØA	ØB	L
	260.00	275.20	10.10

270.00

Part No	WRP 2700 2852 101		
Groove Dimension	ØA	ØB	L
	270.00	285.20	10.10

275.00

Part No	WRP 2750 2902 101		
Groove Dimension	ØA	ØB	L
	275.00	290.20	10.10

280.00

Part No	WRP 2800 3000 101		
Groove Dimension	ØA	ØB	L
	280.00	300.00	10.10

280.00

Part No	WRP 2800 2952 101		
Groove Dimension	ØA	ØB	L
	280.00	295.20	10.10

290.00

Part No	WRP 2900 3052 101		
Groove Dimension	ØA	ØB	L
	290.00	305.20	10.10

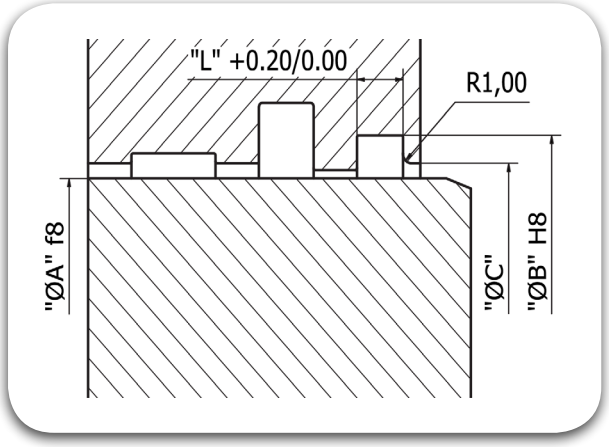

300.00

Part No	WRP 3000 3152 101
Groove Dimension	ØA 300.00 x ØB 315.20 x L 10.10

Wiper Seals

WPP

TRIADA
TECHNOLOGIES

#Sealing**Excellence**






Description

The WPP Scraper is an easy to install snap in type Wiper Seal. Similar to WPN Style but in TRIATHANE® material (Poly-Urethane), better suitable for harsh environment.

Diameter Range	Ø6.00 – Ø180.00 (Larger dia. on request)
Standard material	TRIATHANE® T479 (Poly-Urethane)
Temperature(°C)	- 35°C to 110°C
Speed	< 1.00 m/s
Fluids	Mineral Oils

Material Details

Seal Material	Seal Material / Code
TRIATHANE®	Poly-Urethane T479

Nomenclature

Part No	WPP	1000	1080	040	T479
	Seal profile	Rod Dia x 10	Groove Dia x 10	Groove Width x 10	Seal Material Code

Groove Details

Groove Width "L"	Mouth Diameter "ØC"	Mouth Width "E"
2.00mm	'ØA' + 3.00mm	1.00mm
4.00mm	'ØA' + 6.00mm	1.00mm
5.50mm	'ØA' + 9.00mm	1.50mm

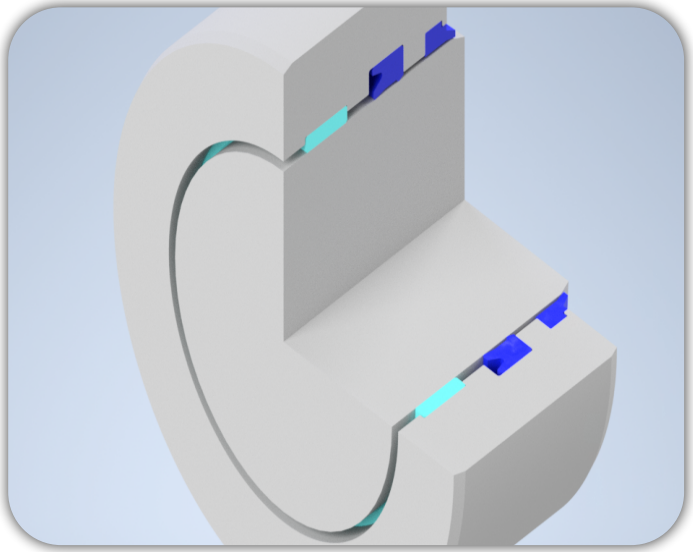

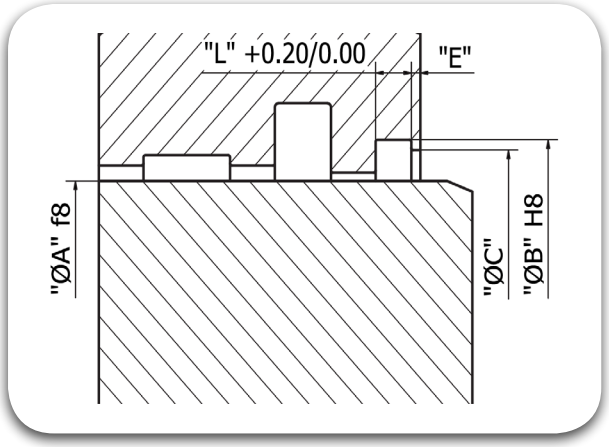

6.00

Part No	WPP 0060 0100 020					
Groove Dimension	ØA	x	ØB	x	L	
	6.00		10.00		2.00	

7.00

Part No	WPP 0070 0110 020					
Groove Dimension	ØA	x	ØB	x	L	
	7.00		11.00		2.00	

12.00

Part No	WPP 0120 0200 040					
Groove Dimension	ØA	x	ØB	x	L	
	12.00		20.00		4.00	

12.00

Part No	WPP 0120 0180 026					
Groove Dimension	ØA	x	ØB	x	L	
	12.00		18.00		2.60	

16.00

Part No	WPP 0160 0240 040					
Groove Dimension	ØA	x	ØB	x	L	
	16.00		24.00		4.00	

18.00

Part No	WPP 0180 0260 040					
Groove Dimension	ØA	x	ØB	x	L	
	18.00		26.00		4.00	

20.00

Part No	WPP 0200 0280 040					
Groove Dimension	ØA	x	ØB	x	L	
	20.00		28.00		4.00	

22.00

Part No	WPP 0220 0300 040					
Groove Dimension	ØA	x	ØB	x	L	
	22.00		30.00		4.00	

24.00

Part No	WPP 0240 0320 040					
Groove Dimension	ØA	x	ØB	x	L	
	24.00		32.00		4.00	

25.00

Part No	WPP 0250 0330 040					
Groove Dimension	ØA	x	ØB	x	L	
	25.00		33.00		4.00	

28.00

Part No	WPP 0280 0360 040					
Groove Dimension	ØA	x	ØB	x	L	
	28.00		36.00		4.00	

30.00

Part No	WPP 0300 0380 040					
Groove Dimension	ØA	x	ØB	x	L	
	30.00		38.00		4.00	

32.00

Part No	WPP 0320 0400 040					
Groove Dimension	ØA	x	ØB	x	L	
	32.00		40.00		4.00	

35.00

Part No	WPP 0350 0430 040					
Groove Dimension	ØA	x	ØB	x	L	
	35.00		43.00		4.00	

36.00

Part No	WPP 0360 0440 040					
Groove Dimension	ØA	x	ØB	x	L	
	36.00		44.00		4.00	

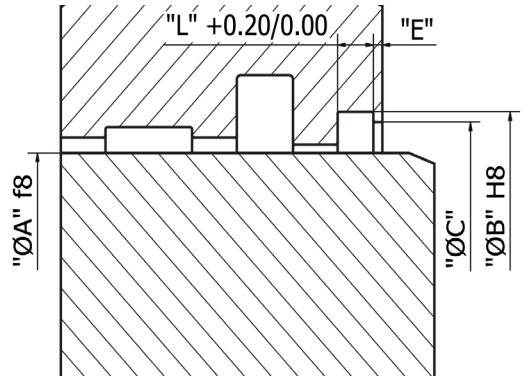

38.00

Part No	WPP 0380 0460 040					
Groove Dimension	ØA	x	ØB	x	L	
	38.00		46.00		4.00	

40.00

Part No	WPP 0400 0480 040					
Groove Dimension	ØA	x	ØB	x	L	
	40.00		48.00		4.00	

42.00

Part No	WPP 0420 0500 040					
Groove Dimension	ØA	x	ØB	x	L	
	42.00		50.00		4.00	

45.00

Part No	WPP 0450 0530 040					
Groove Dimension	ØA	x	ØB	x	L	
	45.00		53.00		4.00	

50.00

Part No	WPP 0500 0580 040					
Groove Dimension	ØA	x	ØB	x	L	
	50.00		58.00		4.00	

54.00

Part No	WPP 0540 0620 040					
Groove Dimension	ØA	x	ØB	x	L	
	54.00		62.00		4.00	

55.00

Part No	WPP 0550 0630 040					
Groove Dimension	ØA	x	ØB	x	L	
	55.00		63.00		4.00	

56.00

Part No	WPP 0560 0640 040					
Groove Dimension	ØA	x	ØB	x	L	
	56.00		64.00		4.00	

60.00

Part No	WPP 0600 0680 040					
Groove Dimension	ØA	x	ØB	x	L	
	60.00		68.00		4.00	

63.00

Part No	WPP 0630 0710 040					
Groove Dimension	ØA	x	ØB	x	L	
	63.00		71.00		4.00	

65.00

Part No	WPP 0650 0730 040					
Groove Dimension	ØA	x	ØB	x	L	
	65.00		73.00		4.00	

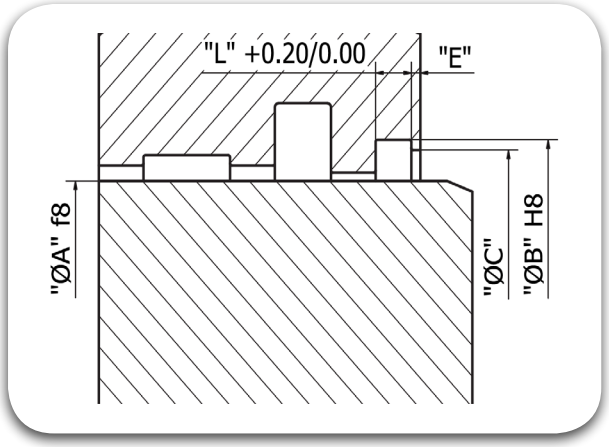

70.00

Part No	WPP 0700 0780 040					
Groove Dimension	ØA	x	ØB	x	L	
	70.00		78.00		4.00	

75.00

Part No	WPP 0750 0830 040					
Groove Dimension	ØA	x	ØB	x	L	
	75.00		83.00		4.00	

80.00

Part No	WPP 0800 0880 040					
Groove Dimension	ØA	x	ØB	x	L	
	80.00		88.00		4.00	

85.00

Part No	WPP 0850 0930 040					
Groove Dimension	ØA	x	ØB	x	L	
	85.00		93.00		4.00	

90.00

Part No	WPP 0900 0980 040					
Groove Dimension	ØA	x	ØB	x	L	
	90.00		98.00		4.00	

95.00

Part No	WPP 0950 1030 040					
Groove Dimension	ØA	x	ØB	x	L	
	95.00		103.00		4.00	

100.00

Part No	WPP 1000 1080 040					
Groove Dimension	ØA	x	ØB	x	L	
	100.00		108.00		4.00	

110.00

Part No	WPP 1100 1220 055					
Groove Dimension	ØA	x	ØB	x	L	
	110.00		122.00		5.50	

120.00

Part No	WPP 1200 1320 055					
Groove Dimension	ØA	x	ØB	x	L	
	120.00		132.00		5.50	

125.00

Part No	WPP 1250 1370 055					
Groove Dimension	ØA	x	ØB	x	L	
	125.00		137.00		5.50	

130.00

Part No	WPP 1300 1420 055					
Groove Dimension	ØA	x	ØB	x	L	
	130.00		142.00		5.50	

135.00

Part No	WPP 1350 1470 055					
Groove Dimension	ØA	x	ØB	x	L	
	135.00		147.00		5.50	

140.00

Part No	WPP 1400 1520 055					
Groove Dimension	ØA	x	ØB	x	L	
	140.00		152.00		5.50	

150.00

Part No	WPP 1500 1620 055					
Groove Dimension	ØA	x	ØB	x	L	
	150.00		162.00		5.50	

160.00

Part No	WPP 1600 1720 055					
Groove Dimension	ØA	x	ØB	x	L	
	160.00		172.00		5.50	

180.00

Part No	WPP 1800 1920 055					
Groove Dimension	ØA	x	ØB	x	L	
	180.00		192.00		5.50	

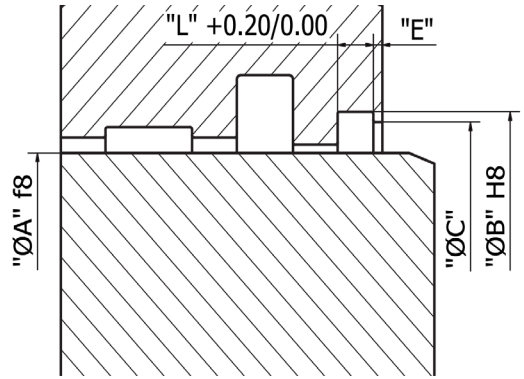

Wiper Seals

WDR

TRIADA
TECHNOLOGIES

#Sealing**Excellence**




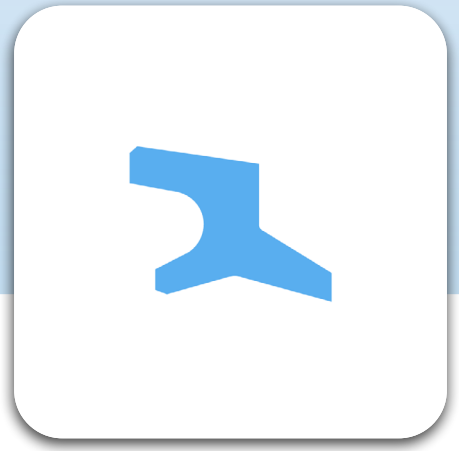

Description

The WDR Wiper is similar to WDD Wiper Seals, but in TRIATHANE® (Poly-Urethane) material and also with different groove dimensions, mostly suggested to be used in conjunction with a back pumping Primary Seal/Secondary Seal, like TRITILT® (RSS Style) Seal. The inner lip holds the film of oil within the system without being leaked out and the outer lip shall prevent any dust particles entering the system.

Diameter Range	Ø4.00 – Ø250.00 (Larger dia. on request)
Standard material	TRIATHANE® T479 (Poly-Urethane)
Temperature(°C)	- 35°C to 110°C
Speed	≤ 1.00 m/s
Fluids	Hydraulic fluids (Mineral Oil based).

Material Details

Seal Material	Seal Material / Code
TRIATHANE®	Poly-Urethane T479

Nomenclature

Part No	WDR	1200	1350	085	T479
	Seal profile	Rod Dia x 10	Groove Dia x 10	Groove Width x 10	Seal Material Code

Groove Details

Groove Width "L"	Mouth Diameter "ØC"
3.50mm	'ØA' + 2.50mm
4.00mm	'ØA' + 2.50mm
5.30mm	'ØA' + 3.00mm
6.00mm	'ØA' + 3.00mm
7.10mm	'ØA' + 6.00mm
8.50mm	'ØA' + 4.00mm

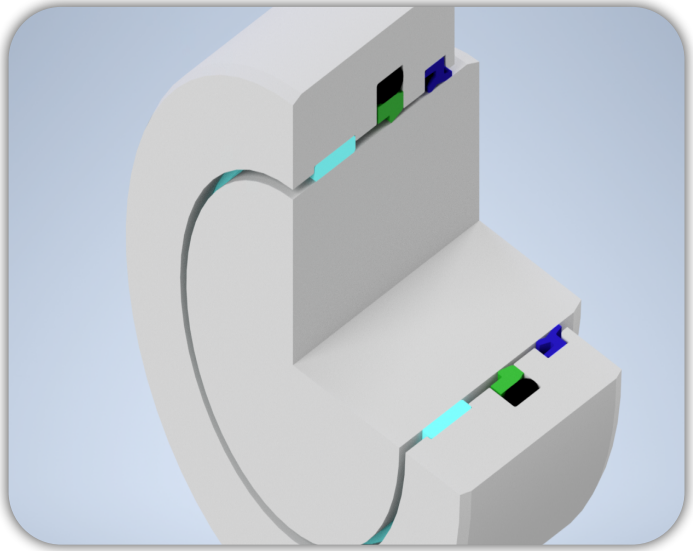

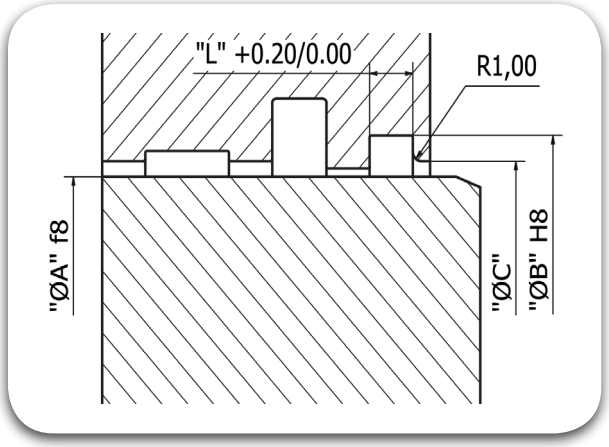

4.00

Part No	WDR 0040 0090 035					
Groove Dimension	ØA	x	ØB	x	L	
	4.00		9.00		3.50	

5.00

Part No	WDR 0050 0100 035					
Groove Dimension	ØA	x	ØB	x	L	
	5.00		10.00		3.50	

6.00

Part No	WDR 0060 0110 035					
Groove Dimension	ØA	x	ØB	x	L	
	6.00		11.00		3.50	

8.00

Part No	WDR 0080 0130 035					
Groove Dimension	ØA	x	ØB	x	L	
	8.00		13.00		3.50	

10.00

Part No	WDR 0100 0160 040					
Groove Dimension	ØA	x	ØB	x	L	
	10.00		16.00		4.00	

12.00

Part No	WDR 0120 0186 038					
Groove Dimension	ØA	x	ØB	x	L	
	12.00		18.60		3.80	

12.00

Part No	WDR 0120 0180 040					
Groove Dimension	ØA	x	ØB	x	L	
	12.00		18.00		4.00	

14.00

Part No	WDR 0140 0200 040					
Groove Dimension	ØA	x	ØB	x	L	
	14.00		20.00		4.00	

16.00

Part No	WDR 0160 0220 040					
Groove Dimension	ØA	x	ØB	x	L	
	16.00		22.00		4.00	

18.00

Part No	WDR 0180 0246 038					
Groove Dimension	ØA	x	ØB	x	L	
	18.00		24.60		3.80	

18.00

Part No	WDR 0180 0240 040					
Groove Dimension	ØA	x	ØB	x	L	
	18.00		24.00		4.00	

18.00

Part No	WDR 0180 0260 050					
Groove Dimension	ØA	x	ØB	x	L	
	18.00		26.00		5.00	

20.00

Part No	WDR 0200 0286 053					
Groove Dimension	ØA	x	ØB	x	L	
	20.00		28.60		5.30	

20.00

Part No	WDR 0200 0260 040					
Groove Dimension	ØA	x	ØB	x	L	
	20.00		26.00		4.00	

22.00

Part No	WDR 0220 0306 053					
Groove Dimension	ØA	x	ØB	x	L	
	22.00		30.60		5.30	

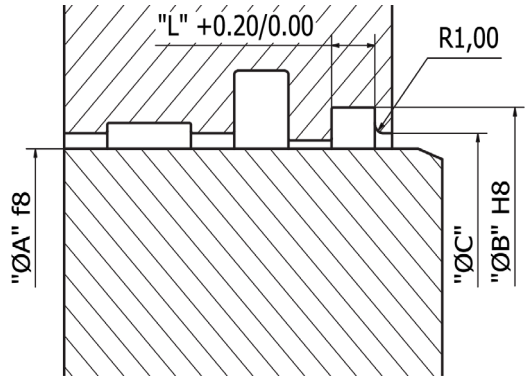

22.00

Part No	WDR 0220 0280 040					
Groove Dimension	ØA	x	ØB	x	L	
	22.00		28.00		4.00	

24.00

Part No	WDR 0240 0326 053					
Groove Dimension	ØA	x	ØB	x	L	
	24.00		32.60		5.30	

25.00

Part No	WDR 0250 0336 053					
Groove Dimension	ØA	x	ØB	x	L	
	25.00		33.60		5.30	

25.00

Part No	WDR 0250 0310 040					
Groove Dimension	ØA	x	ØB	x	L	
	25.00		31.00		4.00	

28.00

Part No	WDR 0280 0366 053					
Groove Dimension	ØA	x	ØB	x	L	
	28.00		36.60		5.30	

28.00

Part No	WDR 0280 0360 050					
Groove Dimension	ØA	x	ØB	x	L	
	28.00		36.00		5.00	

30.00

Part No	WDR 0300 0386 053					
Groove Dimension	ØA	x	ØB	x	L	
	30.00		38.60		5.30	

30.00

Part No	WDR 0300 0380 050					
Groove Dimension	ØA	x	ØB	x	L	
	30.00		38.00		5.00	

32.00

Part No	WDR 0320 0406 053					
Groove Dimension	ØA	x	ØB	x	L	
	32.00		40.60		5.30	

32.00

Part No	WDR 0320 0400 050					
Groove Dimension	ØA	x	ØB	x	L	
	32.00		40.00		5.00	

35.00

Part No	WDR 0350 0436 053					
Groove Dimension	ØA	x	ØB	x	L	
	35.00		43.60		5.30	

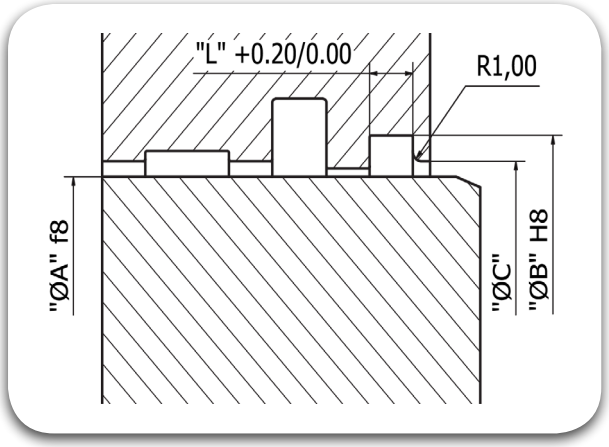

35.00

Part No	WDR 0350 0430 050				
Groove Dimension	ØA	x	ØB	x	L
	35.00		43.00		5.00

36.00

Part No	WDR 0360 0446 053				
Groove Dimension	ØA	x	ØB	x	L
	36.00		44.60		5.30

36.00

Part No	WDR 0360 0440 050				
Groove Dimension	ØA	x	ØB	x	L
	36.00		44.00		5.00

38.00

Part No	WDR 0380 0466 053				
Groove Dimension	ØA	x	ØB	x	L
	38.00		46.60		5.30

40.00

Part No	WDR 0400 0486 053				
Groove Dimension	ØA	x	ØB	x	L
	40.00		48.60		5.30

40.00

Part No	WDR 0400 0480 050				
Groove Dimension	ØA	x	ØB	x	L
	40.00		48.00		5.00

42.00

Part No	WDR 0420 0500 050				
Groove Dimension	ØA	x	ØB	x	L
	42.00		50.00		5.00

45.00

Part No	WDR 0450 0536 053				
Groove Dimension	ØA	x	ØB	x	L
	45.00		53.60		5.30

45.00

Part No	WDR 0450 0530 050				
Groove Dimension	ØA	x	ØB	x	L
	45.00		53.00		5.00

50.00

Part No	WDR 0500 0586 053				
Groove Dimension	ØA	x	ØB	x	L
	50.00		58.60		5.30

50.00

Part No	WDR 0500 0580 050				
Groove Dimension	ØA	x	ØB	x	L
	50.00		58.00		5.00

50.00

Part No	WDR 0500 0580 040				
Groove Dimension	ØA	x	ØB	x	L
	50.00		58.00		4.00

55.00

Part No	WDR 0550 0636 053				
Groove Dimension	ØA	x	ØB	x	L
	55.00		63.60		5.30

55.00

Part No	WDR 0550 0650 060					
Groove Dimension	ØA	x	ØB	x	L	
	55.00		65.00		6.00	

56.00

Part No	WDR 0560 0646 053					
Groove Dimension	ØA	x	ØB	x	L	
	56.00		64.60		5.30	

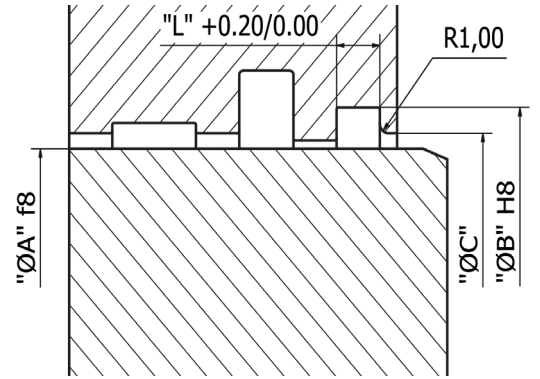

56.00

Part No	WDR 0560 0660 060					
Groove Dimension	ØA	x	ØB	x	L	
	56.00		66.00		6.00	

58.00

Part No	WDR 0580 0680 060					
Groove Dimension	ØA	x	ØB	x	L	
	58.00		68.00		6.00	

60.00

Part No	WDR 0600 0686 053					
Groove Dimension	ØA	x	ØB	x	L	
	60.00		68.60		5.30	

60.00

Part No	WDR 0600 0700 060					
Groove Dimension	ØA	x	ØB	x	L	
	60.00		70.00		6.00	

63.00

Part No	WDR 0630 0716 053					
Groove Dimension	ØA	x	ØB	x	L	
	63.00		71.60		5.30	

63.00

Part No	WDR 0630 0730 060					
Groove Dimension	ØA	x	ØB	x	L	
	63.00		73.00		6.00	

65.00

Part No	WDR 0650 0736 053					
Groove Dimension	ØA	x	ØB	x	L	
	65.00		73.60		5.30	

65.00

Part No	WDR 0650 0750 060					
Groove Dimension	ØA	x	ØB	x	L	
	65.00		75.00		6.00	

70.00

Part No	WDR 0700 0786 053					
Groove Dimension	ØA	x	ØB	x	L	
	70.00		78.60		5.30	

70.00

Part No	WDR 0700 0800 060					
Groove Dimension	ØA	x	ØB	x	L	
	70.00		80.00		6.00	

75.00

Part No	WDR 0750 0836 053					
Groove Dimension	ØA	x	ØB	x	L	
	75.00		83.60		5.30	

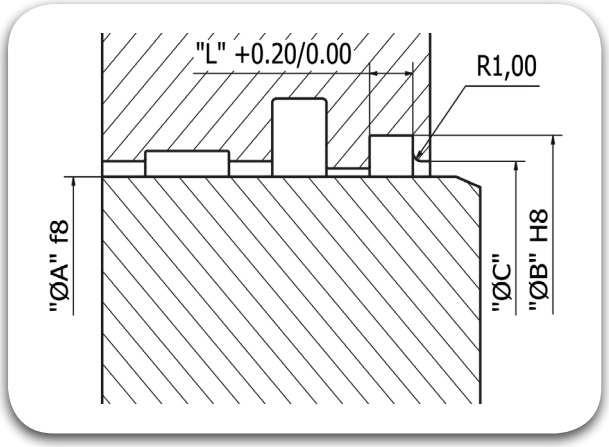

75.00

		ØA		ØB		L
Part No	WDR 0750 0850 060					
Groove Dimension		75.00	x	85.00	x	6.00

78.00

		ØA		ØB		L
Part No	WDR 0780 0880 060					
Groove Dimension		78.00	x	88.00	x	6.00

80.00

		ØA		ØB		L
Part No	WDR 0800 0886 053					
Groove Dimension		80.00	x	88.60	x	5.30

80.00

		ØA		ØB		L
Part No	WDR 0800 0900 060					
Groove Dimension		80.00	x	90.00	x	6.00

85.00

		ØA		ØB		L
Part No	WDR 0850 0972 071					
Groove Dimension		85.00	x	97.20	x	7.10

85.00

		ØA		ØB		L
Part No	WDR 0850 0950 060					
Groove Dimension		85.00	x	95.00	x	6.00

90.00

		ØA		ØB		L
Part No	WDR 0900 1022 071					
Groove Dimension		90.00	x	102.20	x	7.10

90.00

		ØA		ØB		L
Part No	WDR 0900 1000 060					
Groove Dimension		90.00	x	100.00	x	6.00

100.00

		ØA		ØB		L
Part No	WDR 1000 1122 071					
Groove Dimension		100.00	x	112.20	x	7.10

100.00

		ØA		ØB		L
Part No	WDR 1000 1100 060					
Groove Dimension		100.00	x	110.00	x	6.00

110.00

		ØA		ØB		L
Part No	WDR 1100 1222 071					
Groove Dimension		110.00	x	122.20	x	7.10

110.00

		ØA		ØB		L
Part No	WDR 1100 1250 085					
Groove Dimension		110.00	x	125.00	x	8.50

120.00

		ØA		ØB		L
Part No	WDR 1200 1350 085					
Groove Dimension		120.00	x	135.00	x	8.50

125.00

Part No	WDR 1250 1400 085					
Groove Dimension	ØA	x	ØB	x	L	
	125.00		140.00		8.50	

140.00

Part No	WDR 1400 1550 085					
Groove Dimension	ØA	x	ØB	x	L	
	140.00		155.00		8.50	

150.00

Part No	WDR 1500 1650 085					
Groove Dimension	ØA	x	ØB	x	L	
	150.00		165.00		8.50	

160.00

Part No	WDR 1600 1750 085					
Groove Dimension	ØA	x	ØB	x	L	
	160.00		175.00		8.50	

180.00

Part No	WDR 1800 1950 085					
Groove Dimension	ØA	x	ØB	x	L	
	180.00		195.00		8.50	

240.00

Part No	WDR 2400 2550 085					
Groove Dimension	ØA	x	ØB	x	L	
	240.00		255.00		8.50	

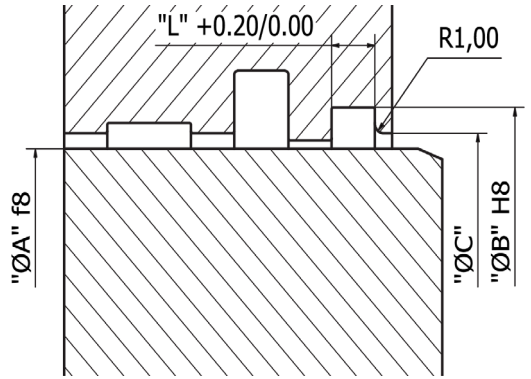

Wiper Seals

WDU

TRIADA
TECHNOLOGIES

#Sealing**Excellence**






Description

WDU Wiper is a Double Lip Wiper in TRIATHANE® (Poly-Urethane) compound, designed to work at severe operating conditions. The Lip at the outer edge is designed in such a way that, it avoids the attack of dirt entering into the system for axial and side steering of moving rods.

Diameter Range	Ø45.00 – Ø280.00 (Larger dia. on request)
Standard material	TRIATHANE® T479 (Poly-Urethane)
Temperature(°C)	- 35°C to 110°C
Speed	< 1.00 m/s
Fluids	Mineral Oils

Material Details

Seal Material	Seal Material / Code
TRIATHANE®	T479 Poly-Urethane

Nomenclature

Part No	WDU	1000	1122	081	T479
	Seal profile	Rod Dia x 10	Groove Dia x 10	Groove Width x 10	Seal Material Code

Groove Details

Groove Width "L"	Step Diameter "ØC"	Mouth Width "E"	Width "F"	Radius "Z"
5.50mm	'ØA' + 4.60mm	3.20mm	2.00mm	1.20mm
6.30mm	'ØA' + 4.40mm	3.20mm	2.00mm	1.20mm
8.10mm	'ØA' + 6.00mm	4.00mm	2.50mm	1.60mm
9.50mm	'ØA' + 8.00mm	5.00mm	3.00mm	2.00mm

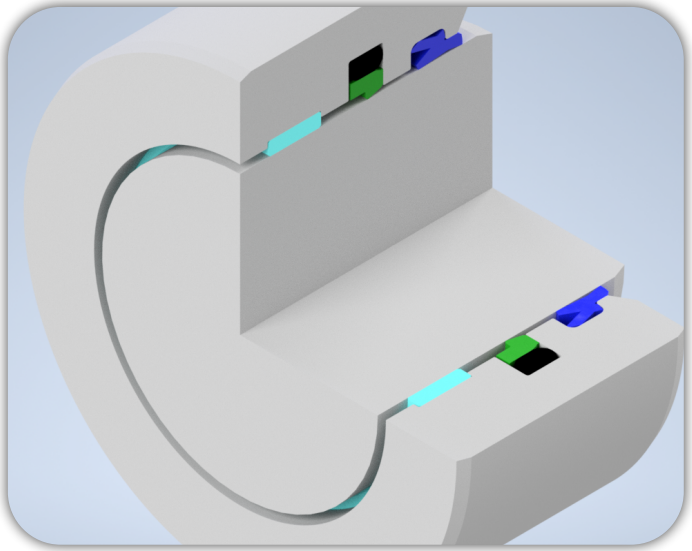

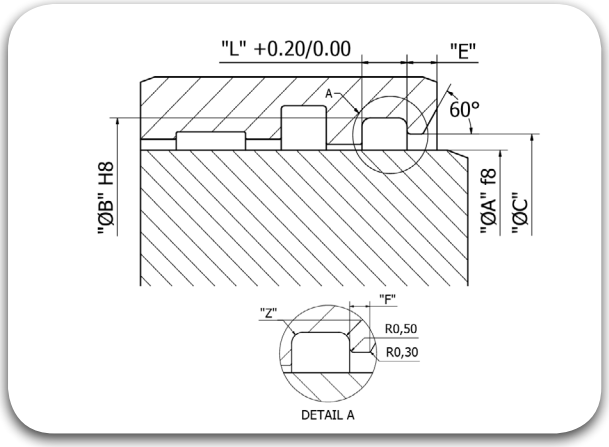

45.00

Part No	WDU 0450 0538 063					
Groove Dimension	ØA	x	ØB	x	L	
	45.00		53.80		6.30	

50.00

Part No	WDU 0500 0588 063					
Groove Dimension	ØA	x	ØB	x	L	
	50.00		58.80		6.30	

55.00

Part No	WDU 0550 0650 055					
Groove Dimension	ØA	x	ØB	x	L	
	55.00		65.00		5.50	

60.00

Part No	WDU 0600 0688 063					
Groove Dimension	ØA	x	ØB	x	L	
	60.00		68.80		6.30	

70.00

Part No	WDU 0700 0822 081					
Groove Dimension	ØA	x	ØB	x	L	
	70.00		82.20		8.10	

75.00

Part No	WDU 0750 0872 081					
Groove Dimension	ØA	x	ØB	x	L	
	75.00		87.20		8.10	

80.00

Part No	WDU 0800 0922 081					
Groove Dimension	ØA	x	ØB	x	L	
	80.00		92.20		8.10	

85.00

Part No	WDU 0850 0972 081					
Groove Dimension	ØA	x	ØB	x	L	
	85.00		97.20		8.10	

90.00

Part No	WDU 0900 1022 081					
Groove Dimension	ØA	x	ØB	x	L	
	90.00		102.20		8.10	

95.00

Part No	WDU 0950 1072 081					
Groove Dimension	ØA	x	ØB	x	L	
	95.00		107.20		8.10	

100.00

Part No	WDU 1000 1122 081					
Groove Dimension	ØA	x	ØB	x	L	
	100.00		112.20		8.10	

105.00

Part No	WDU 1050 1172 081					
Groove Dimension	ØA	x	ØB	x	L	
	105.00		117.20		8.10	

110.00

Part No	WDU 1100 1222 081					
Groove Dimension	ØA	x	ØB	x	L	
	110.00		122.20		8.10	

125.00

Part No	WDU 1250 1372 081		
Groove Dimension	ØA x ØB x L		
	125.00	137.20	8.10

130.00

Part No	WDU 1300 1422 081		
Groove Dimension	ØA x ØB x L		
	130.00	142.20	8.10

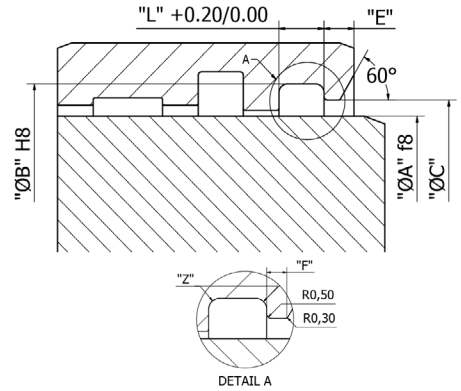

140.00

Part No	WDU 1400 1560 095		
Groove Dimension	ØA x ØB x L		
	140.00	156.00	9.50

150.00

Part No	WDU 1500 1660 095		
Groove Dimension	ØA x ØB x L		
	150.00	166.00	9.50

160.00

Part No	WDU 1600 1760 095		
Groove Dimension	ØA x ØB x L		
	160.00	176.00	9.50

170.00

Part No	WDU 1700 1860 095		
Groove Dimension	ØA x ØB x L		
	170.00	186.00	9.50

180.00

Part No	WDU 1800 1960 095		
Groove Dimension	ØA x ØB x L		
	180.00	196.00	9.50

190.00

Part No	WDU 1900 2060 095		
Groove Dimension	ØA x ØB x L		
	190.00	206.00	9.50

200.00

Part No	WDU 2000 2160 095		
Groove Dimension	ØA x ØB x L		
	200.00	216.00	9.50

220.00

Part No	WDU 2200 2360 095		
Groove Dimension	ØA x ØB x L		
	220.00	236.00	9.50

240.00

Part No	WDU 2400 2560 095		
Groove Dimension	ØA x ØB x L		
	240.00	256.00	9.50

250.00

Part No	WDU 2500 2600 095		
Groove Dimension	ØA x ØB x L		
	250.00	266.00	9.50

260.00

Part No	WDU 2600 2760 095		
Groove Dimension	ØA x ØB x L		
	260.00	276.00	9.50

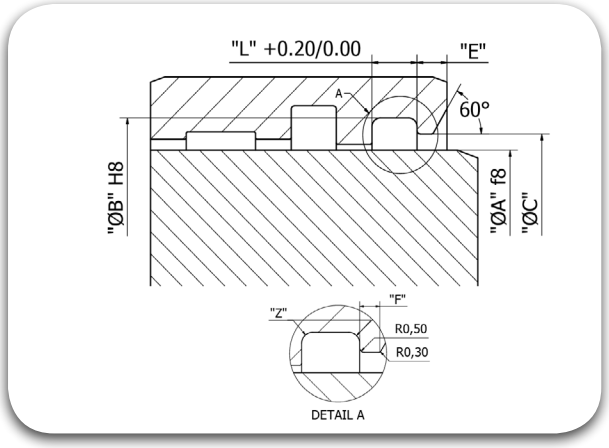

280.00

Part No	WDU 2800 2960 095
Groove Dimension	ØA x ØB x L 280.00 x 296.00 x 9.50

Wiper Seals

WDP

TRIADA
TECHNOLOGIES

#Sealing**Excellence**




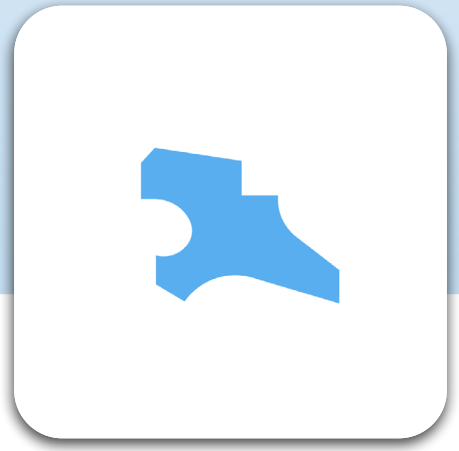

Description

The WDP Wiper is similar to WDD Wiper Seals but in TRIATHANE® (Poly-Urethane) material, mostly suggested to be used in conjunction with a back pumping Primary Seal/Secondary Seal like TRITILT® (RSS style) Seal. The inner lip holds the film of oil within the system without being leaked out and the outer lip shall prevent any dust
particles entering the system.

Diameter Range	Ø4.00 – Ø280.00 (Larger dia. on request)
Standard material	TRIATHANE® T479 (Poly-Urethane)
Temperature(°C)	- 35°C to 110°C
Speed	≤ 1.00 m/s
Fluids	Hydraulic fluids (Mineral Oil based).

Material Details

Seal Material	Seal Material / Code
TRIATHANE®	Poly-Urethane T479

Nomenclature

Part No	WDP	1250	1370	082	T479
	Seal profile	Rod Dia x 10	Groove Dia x 10	Groove Width x 10	Seal Material Code

Groove Details

Rod Diameter Range “ØA”	Mouth Groove Diameter “ØC”
10.00 - 100.00	‘ØA’ + 3.50mm
105.00 - 210.00	‘ØA’ + 5.00mm

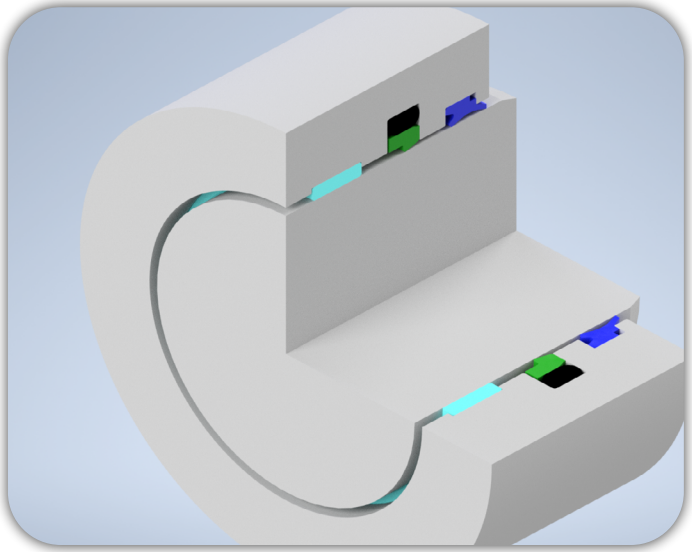

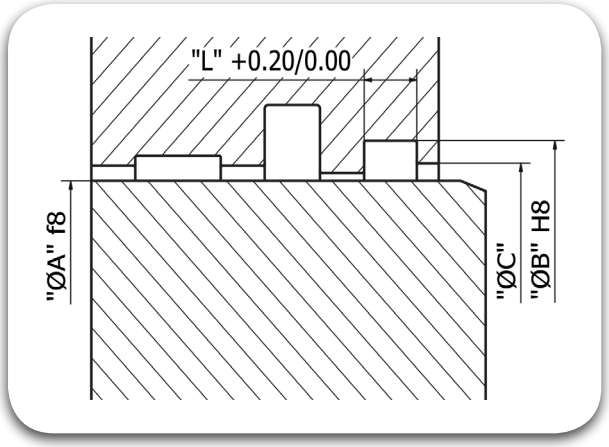

10.00

Part No	WDP 0100 0180 060					
Groove Dimension	ØA	x	ØB	x	L	
	10.00		18.00		6.00	

12.00

Part No	WDP 0120 0200 060					
Groove Dimension	ØA	x	ØB	x	L	
	12.00		20.00		6.00	

14.00

Part No	WDP 0140 0220 060					
Groove Dimension	ØA	x	ØB	x	L	
	14.00		22.00		6.00	

15.00

Part No	WDP 0150 0230 060					
Groove Dimension	ØA	x	ØB	x	L	
	15.00		23.00		6.00	

16.00

Part No	WDP 0160 0240 060					
Groove Dimension	ØA	x	ØB	x	L	
	16.00		24.00		6.00	

18.00

Part No	WDP 0180 0260 060					
Groove Dimension	ØA	x	ØB	x	L	
	18.00		26.00		6.00	

20.00

Part No	WDP 0200 0280 060					
Groove Dimension	ØA	x	ØB	x	L	
	20.00		28.00		6.00	

22.00

Part No	WDP 0220 0300 060					
Groove Dimension	ØA	x	ØB	x	L	
	22.00		30.00		6.00	

25.00

Part No	WDP 0250 0330 060					
Groove Dimension	ØA	x	ØB	x	L	
	25.00		33.00		6.00	

28.00

Part No	WDP 0280 0360 060					
Groove Dimension	ØA	x	ØB	x	L	
	28.00		36.00		6.00	

30.00

Part No	WDP 0300 0380 060					
Groove Dimension	ØA	x	ØB	x	L	
	30.00		38.00		6.00	

32.00

Part No	WDP 0320 0400 060					
Groove Dimension	ØA	x	ØB	x	L	
	32.00		40.00		6.00	

35.00

Part No	WDP 0350 0430 060					
Groove Dimension	ØA	x	ØB	x	L	
	35.00		43.00		6.00	

36.00

		ØA		ØB		L
Part No	WDP 0360 0440 060					
Groove Dimension		36.00	x	44.00	x	6.00

40.00

		ØA		ØB		L
Part No	WDP 0400 0480 060					
Groove Dimension		40.00	x	48.00	x	6.00

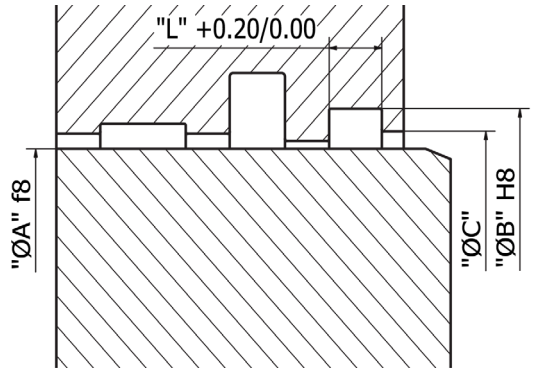

42.00

		ØA		ØB		L
Part No	WDP 0420 0500 060					
Groove Dimension		42.00	x	50.00	x	6.00

45.00

		ØA		ØB		L
Part No	WDP 0450 0530 060					
Groove Dimension		45.00	x	53.00	x	6.00

50.00

		ØA		ØB		L
Part No	WDP 0500 0580 060					
Groove Dimension		50.00	x	58.00	x	6.00

55.00

		ØA		ØB		L
Part No	WDP 0550 0630 060					
Groove Dimension		55.00	x	63.00	x	6.00

56.00

		ØA		ØB		L
Part No	WDP 0560 0640 060					
Groove Dimension		56.00	x	64.00	x	6.00

60.00

		ØA		ØB		L
Part No	WDP 0600 0680 060					
Groove Dimension		60.00	x	68.00	x	6.00

63.00

		ØA		ØB		L
Part No	WDP 0630 0710 060					
Groove Dimension		63.00	x	71.00	x	6.00

65.00

		ØA		ØB		L
Part No	WDP 0650 0730 060					
Groove Dimension		65.00	x	73.00	x	6.00

70.00

		ØA		ØB		L
Part No	WDP 0700 0780 060					
Groove Dimension		70.00	x	78.00	x	6.00

75.00

		ØA		ØB		L
Part No	WDP 0750 0830 060					
Groove Dimension		75.00	x	83.00	x	6.00

80.00

		ØA		ØB		L
Part No	WDP 0800 0880 060					
Groove Dimension		80.00	x	88.00	x	6.00

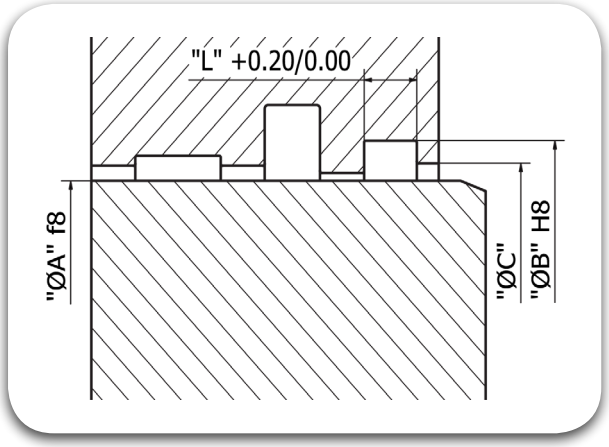

85.00

Part No	WDP 0850 0930 060				
Groove Dimension	ØA	x	ØB	x	L
	85.00		93.00		6.00

90.00

Part No	WDP 0900 0980 060				
Groove Dimension	ØA	x	ØB	x	L
	90.00		98.00		6.00

100.00

Part No	WDP 1000 1080 060				
Groove Dimension	ØA	x	ØB	x	L
	100.00		108.00		6.00

105.00

Part No	WDP 1050 1170 082				
Groove Dimension	ØA	x	ØB	x	L
	105.00		117.00		8.20

110.00

Part No	WDP 1100 1220 082				
Groove Dimension	ØA	x	ØB	x	L
	110.00		122.00		8.20

115.00

Part No	WDP 1150 1270 082				
Groove Dimension	ØA	x	ØB	x	L
	115.00		127.00		8.20

120.00

Part No	WDP 1200 1320 082				
Groove Dimension	ØA	x	ØB	x	L
	120.00		132.00		8.20

125.00

Part No	WDP 1250 1370 082				
Groove Dimension	ØA	x	ØB	x	L
	125.00		137.00		8.20

130.00

Part No	WDP 1300 1420 082				
Groove Dimension	ØA	x	ØB	x	L
	130.00		142.00		8.20

Wiper Seals

WED

TRIADA
TECHNOLOGIES

#SealingExcellence




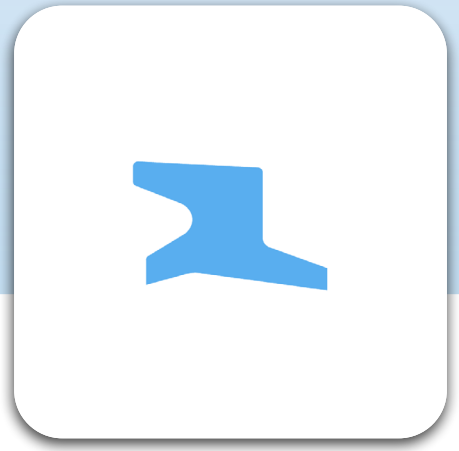

Description

The WED Wiper is similar to WDD style Wiper Seals, but in TRIATHANE® (Poly-Urethane) compound and different groove dimensions, mostly suggested to be used in conjunction with a back pumping Primary Seal/ Secondary Seal, like TRITILT® (RSS style) Seal. The inner lip holds the film of oil within the system without being leaked out and the outer lip shall prevent any dust particles entering the system.

Diameter Range	Ø6.00 – Ø280.00 (Larger dia. on request)
Standard material	TRIATHANE® T479 (Poly-Urethane)
Temperature(°C)	- 35°C to 110°C
Speed	≤ 1.00 m/s
Fluids	Hydraulic fluids (Mineral Oil based).

Material Details

Seal Material	Seal Material / Code
TRIATHANE®	Poly-Urethane T479

Nomenclature

Part No	WED	1200	1350	085	T479
	Seal profile	Rod Dia x 10	Groove Dia x 10	Groove Width x 10	Seal Material Code

Groove Details

Groove Width "L"	Mouth Diameter "ØC"
3.50mm	'ØA' + 2.50mm
4.00mm	'ØA' + 2.50mm
5.30mm	'ØA' + 3.00mm
6.00mm	'ØA' + 3.00mm
7.10mm	'ØA' + 6.00mm
8.50mm	'ØA' + 4.00mm

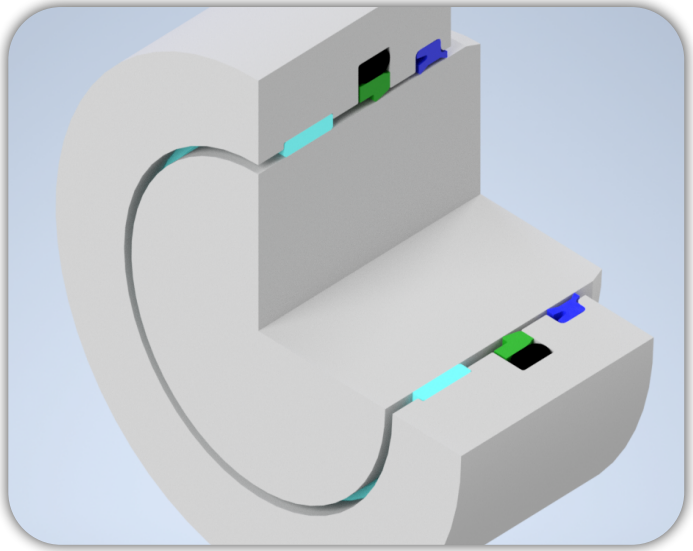

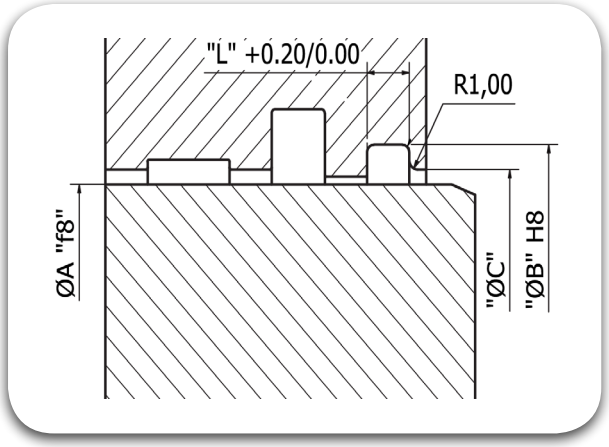

6.00

Part No	WED 0060 0110 035				
Groove Dimension	ØA	x	ØB	x	L
	6.00		11.00		3.50

8.00

Part No	WED 0080 0130 035				
Groove Dimension	ØA	x	ØB	x	L
	8.00		13.00		3.50

10.00

Part No	WED 0100 0160 040				
Groove Dimension	ØA	x	ØB	x	L
	10.00		16.00		4.00

12.00

Part No	WED 0120 0180 040				
Groove Dimension	ØA	x	ØB	x	L
	12.00		18.00		4.00

12.00

Part No	WED 0120 0186 040				
Groove Dimension	ØA	x	ØB	x	L
	12.00		18.60		3.80

14.00

Part No	WED 0140 0200 040				
Groove Dimension	ØA	x	ØB	x	L
	14.00		20.00		4.00

14.00

Part No	WED 0140 0206 038				
Groove Dimension	ØA	x	ØB	x	L
	14.00		20.60		3.80

16.00

Part No	WED 0160 0220 040				
Groove Dimension	ØA	x	ØB	x	L
	16.00		22.00		4.00

18.00

Part No	WED 0180 0240 040				
Groove Dimension	ØA	x	ØB	x	L
	18.00		24.00		4.00

18.00

Part No	WED 0180 0246 038				
Groove Dimension	ØA	x	ØB	x	L
	18.00		24.60		3.80

20.00

Part No	WED 0200 0260 040				
Groove Dimension	ØA	x	ØB	x	L
	20.00		26.00		4.00

20.00

Part No	WED 0200 0286 053				
Groove Dimension	ØA	x	ØB	x	L
	20.00		28.60		5.30

22.00

Part No	WED 0220 0280 040				
Groove Dimension	ØA	x	ØB	x	L
	22.00		28.00		4.00

22.00

Part No	WED 0220 0306 053					
Groove Dimension	ØA	x	ØB	x	L	
	22.00		30.60		5.30	

24.00

Part No	WED 0240 0326 053					
Groove Dimension	ØA	x	ØB	x	L	
	24.00		32.60		5.30	

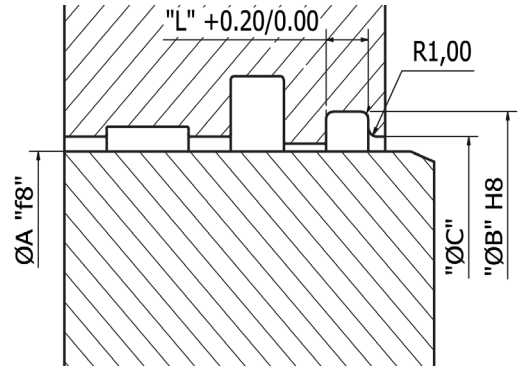

25.00

Part No	WED 0250 0310 040					
Groove Dimension	ØA	x	ØB	x	L	
	25.00		31.00		4.00	

25.00

Part No	WED 0250 0336 053					
Groove Dimension	ØA	x	ØB	x	L	
	25.00		33.60		5.30	

28.00

Part No	WED 0280 0360 050					
Groove Dimension	ØA	x	ØB	x	L	
	28.00		36.00		5.00	

28.00

Part No	WED 0280 0366 053					
Groove Dimension	ØA	x	ØB	x	L	
	28.00		36.60		5.30	

30.00

Part No	WED 0300 0380 050					
Groove Dimension	ØA	x	ØB	x	L	
	30.00		38.00		5.00	

30.00

Part No	WED 0300 0386 053					
Groove Dimension	ØA	x	ØB	x	L	
	30.00		38.60		5.30	

32.00

Part No	WED 0320 0400 050					
Groove Dimension	ØA	x	ØB	x	L	
	32.00		40.00		5.00	

32.00

Part No	WED 0320 0406 053					
Groove Dimension	ØA	x	ØB	x	L	
	32.00		40.60		5.30	

35.00

Part No	WED 0350 0436 050					
Groove Dimension	ØA	x	ØB	x	L	
	35.00		43.00		5.00	

35.00

Part No	WED 0350 0436 053					
Groove Dimension	ØA	x	ØB	x	L	
	35.00		43.60		5.30	

35.00

Part No	WED 0350 0450 050					
Groove Dimension	ØA	x	ØB	x	L	
	35.00		45.00		5.00	

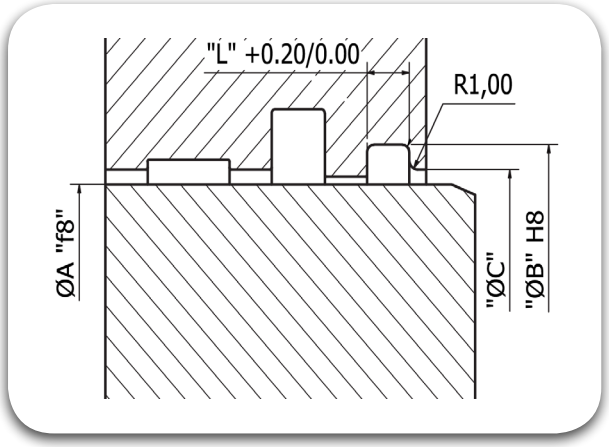

36.00

Part No	WED 0360 0440 050				
Groove Dimension	ØA	x	ØB	x	L
	36.00		44.00		5.00

36.00

Part No	WED 0360 0446 053				
Groove Dimension	ØA	x	ØB	x	L
	36.00		44.60		5.30

38.00

Part No	WED 0380 0460 050				
Groove Dimension	ØA	x	ØB	x	L
	38.00		46.00		5.00

40.00

Part No	WED 0400 0480 050				
Groove Dimension	ØA	x	ØB	x	L
	40.00		48.00		5.00

40.00

Part No	WED 0400 0486 053				
Groove Dimension	ØA	x	ØB	x	L
	40.00		48.60		5.30

42.00

Part No	WED 0420 0500 050				
Groove Dimension	ØA	x	ØB	x	L
	42.00		50.00		5.00

42.00

Part No	WED 0420 0500 060				
Groove Dimension	ØA	x	ØB	x	L
	42.00		50.00		6.00

45.00

Part No	WED 0450 0530 050				
Groove Dimension	ØA	x	ØB	x	L
	45.00		53.00		5.00

45.00

Part No	WED 0450 0536 053				
Groove Dimension	ØA	x	ØB	x	L
	45.00		53.60		5.30

50.00

Part No	WED 0500 0580 050				
Groove Dimension	ØA	x	ØB	x	L
	50.00		58.00		5.00

50.00

Part No	WED 0500 0586 053				
Groove Dimension	ØA	x	ØB	x	L
	50.00		58.60		5.30

50.00

Part No	WED 0500 0600 060				
Groove Dimension	ØA	x	ØB	x	L
	50.00		60.00		6.00

55.00

Part No	WED 0550 0636 053				
Groove Dimension	ØA	x	ØB	x	L
	55.00		63.60		5.30

55.00

Part No	WED 0550 0650 060					
Groove Dimension	ØA	x	ØB	x	L	
	55.00		65.00		6.00	

56.00

Part No	WED 0560 0646 053					
Groove Dimension	ØA	x	ØB	x	L	
	56.00		64.60		5.30	

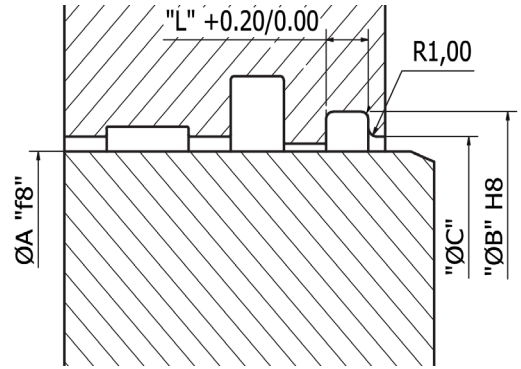

56.00

Part No	WED 0560 0660 060					
Groove Dimension	ØA	x	ØB	x	L	
	56.00		66.00		6.00	

58.00

Part No	WED 0580 0680 060					
Groove Dimension	ØA	x	ØB	x	L	
	58.00		68.00		6.00	

60.00

Part No	WED 0600 0686 053					
Groove Dimension	ØA	x	ØB	x	L	
	60.00		68.60		5.30	

60.00

Part No	WED 0600 0700 060					
Groove Dimension	ØA	x	ØB	x	L	
	60.00		70.00		6.00	

63.00

Part No	WED 0630 0716 053					
Groove Dimension	ØA	x	ØB	x	L	
	63.00		71.60		5.30	

63.00

Part No	WED 0630 0730 060					
Groove Dimension	ØA	x	ØB	x	L	
	63.00		73.00		6.00	

65.00

Part No	WED 0650 0736 053					
Groove Dimension	ØA	x	ØB	x	L	
	65.00		73.60		5.30	

65.00

Part No	WED 0650 0750 060					
Groove Dimension	ØA	x	ØB	x	L	
	65.00		75.00		6.00	

67.00

Part No	WED 0670 0770 060					
Groove Dimension	ØA	x	ØB	x	L	
	67.00		77.00		6.00	

70.00

Part No	WED 0700 0786 053					
Groove Dimension	ØA	x	ØB	x	L	
	70.00		78.60		5.30	

70.00

Part No	WED 0700 0800 060					
Groove Dimension	ØA	x	ØB	x	L	
	70.00		80.00		6.00	

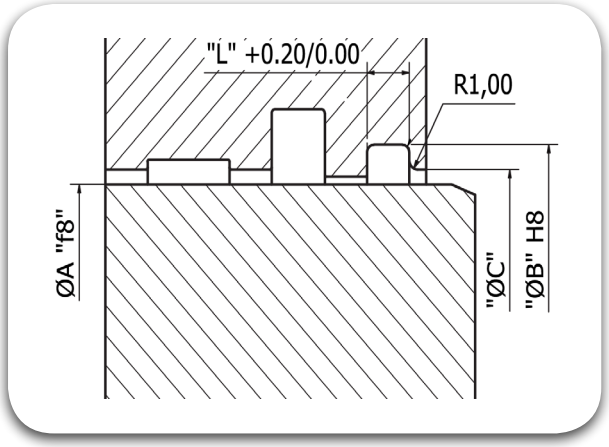

75.00

Part No	WED 0750 0836 053					
Groove Dimension	ØA	x	ØB	x	L	
	75.00		83.60		5.30	

75.00

Part No	WED 0750 0850 060					
Groove Dimension	ØA	x	ØB	x	L	
	75.00		85.00		6.00	

78.00

Part No	WED 0780 0880 060					
Groove Dimension	ØA	x	ØB	x	L	
	78.00		88.00		6.00	

80.00

Part No	WED 0800 0886 053					
Groove Dimension	ØA	x	ØB	x	L	
	80.00		88.60		5.30	

80.00

Part No	WED 0800 0900 060					
Groove Dimension	ØA	x	ØB	x	L	
	80.00		90.00		6.00	

85.00

Part No	WED 0850 0936 053					
Groove Dimension	ØA	x	ØB	x	L	
	85.00		93.60		5.30	

85.00

Part No	WED 0850 0950 060					
Groove Dimension	ØA	x	ØB	x	L	
	85.00		95.00		6.00	

85.00

Part No	WED 0850 0972 071					
Groove Dimension	ØA	x	ØB	x	L	
	85.00		97.20		7.10	

90.00

Part No	WED 0900 1000 060					
Groove Dimension	ØA	x	ØB	x	L	
	90.00		100.00		6.00	

90.00

Part No	WED 0900 1022 071					
Groove Dimension	ØA	x	ØB	x	L	
	90.00		102.20		7.10	

100.00

Part No	WED 1000 1100 060					
Groove Dimension	ØA	x	ØB	x	L	
	100.00		110.00		6.00	

100.00

Part No	WED 1000 1122 071					
Groove Dimension	ØA	x	ØB	x	L	
	100.00		112.20		7.10	

110.00

Part No	WED 1100 1122 071					
Groove Dimension	ØA	x	ØB	x	L	
	110.00		112.20		7.10	

110.00

Part No	WED 1100 1250 085					
Groove Dimension	ØA	x	ØB	x	L	
	110.00		125.00		8.50	

120.00

Part No	WED 1200 1350 085					
Groove Dimension	ØA	x	ØB	x	L	
	120.00		135.00		8.50	

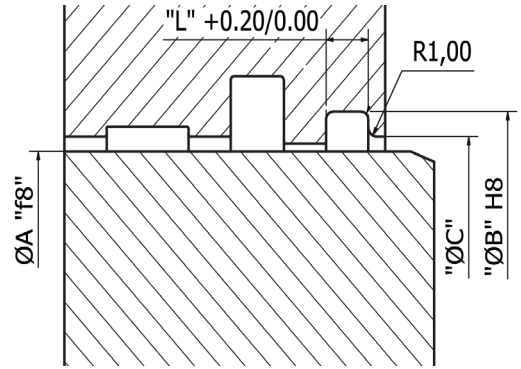

125.00

Part No	WED 1250 1400 085					
Groove Dimension	ØA	x	ØB	x	L	
	125.00		140.00		8.50	

140.00

Part No	WED 1400 1550 085					
Groove Dimension	ØA	x	ØB	x	L	
	140.00		155.00		8.50	

150.00

Part No	WED 1500 1650 085					
Groove Dimension	ØA	x	ØB	x	L	
	150.00		165.00		8.50	

160.00

Part No	WED 1600 1750 085					
Groove Dimension	ØA	x	ØB	x	L	
	160.00		175.00		8.50	

180.00

Part No	WED 1800 1950 085					
Groove Dimension	ØA	x	ØB	x	L	
	180.00		195.00		8.50	

Wiper Seals

WPW

TRIADA
TECHNOLOGIES

#Sealing**Excellence**






Description

The WPW Wiper is a single acting elastomer Wiper with metal integration which supports the lip to wipe the solid matter on the Rod surface and avoiding it from entering into the system, thus eliminating damage to other seals and internal components. This seal is easier to install compared to WGN and WGP type seals, as this seal has the metal ring facing outside and thus the force could easily be exerted. But, this seals also has the risk of the metal body getting rusted if exposed to such conditions.

Diameter Range	Ø8.00 – Ø125.00 (Larger dia. on request)
Standard material	TRIATHANE® T479 (Poly-Urethane)
Temperature(°C)	- 35°C to 110°C
Speed	≤ 1.00 m/s
Fluids	Hydraulic fluids (Mineral Oil based).

Material Details

Seal Material	Seal Material / Code
TRIATHANE®	Poly-Urethane T479

Nomenclature

Part No	WPW	1000	1140	080	T479
	Seal profile	Rod Dia x 10	Groove Dia x 10	Groove Width x 10	Seal Material Code

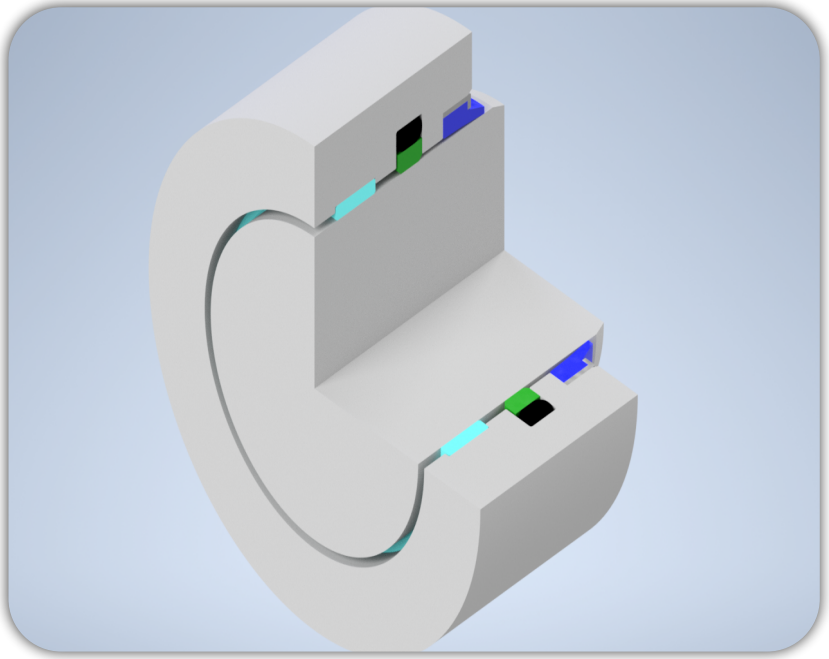

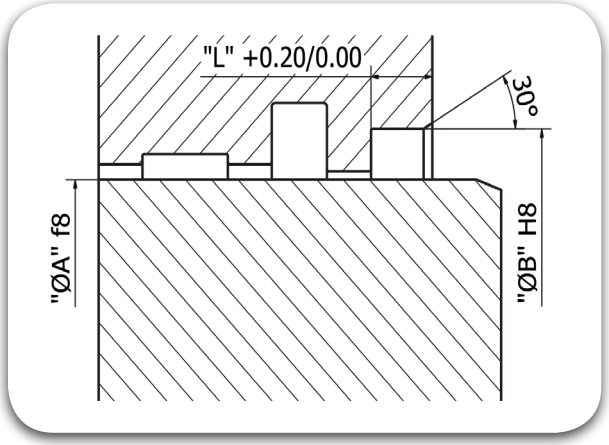

8.00

Part No	WPW 0080 0140 035					
Groove Dimension	ØA	x	ØB	x	L	
	8.00		14.00		3.50	

10.00

Part No	WPW 0100 0160 035					
Groove Dimension	ØA	x	ØB	x	L	
	10.00		16.00		3.50	

12.00

Part No	WPW 0120 0220 050					
Groove Dimension	ØA	x	ØB	x	L	
	12.00		22.00		5.00	

12.00

Part No	WPW 0120 0200 040					
Groove Dimension	ØA	x	ØB	x	L	
	12.00		20.00		4.00	

14.00

Part No	WPW 0140 0220 045					
Groove Dimension	ØA	x	ØB	x	L	
	14.00		22.00		4.50	

14.00

Part No	WPW 0140 0250 050					
Groove Dimension	ØA	x	ØB	x	L	
	14.00		25.00		5.00	

14.00

Part No	WPW 0140 0200 035					
Groove Dimension	ØA	x	ØB	x	L	
	14.00		20.00		3.50	

15.00

Part No	WPW 0150 0210 035					
Groove Dimension	ØA	x	ØB	x	L	
	15.00		21.00		3.50	

16.00

Part No	WPW 0160 0260 050					
Groove Dimension	ØA	x	ØB	x	L	
	16.00		26.00		5.00	

16.00

Part No	WPW 0160 0220 030					
Groove Dimension	ØA	x	ØB	x	L	
	16.00		22.00		3.00	

18.00

Part No	WPW 0180 0260 045					
Groove Dimension	ØA	x	ØB	x	L	
	18.00		26.00		4.50	

18.00

Part No	WPW 0180 0280 070					
Groove Dimension	ØA	x	ØB	x	L	
	18.00		28.00		7.00	

18.00

Part No	WPW 0180 0280 050					
Groove Dimension	ØA	x	ØB	x	L	
	18.00		28.00		5.00	

20.00

Part No	WPW 0200 0300 070					
Groove Dimension	ØA	x	ØB	x	L	
	20.00		30.00		7.00	

22.00

Part No	WPW 0220 0320 070					
Groove Dimension	ØA	x	ØB	x	L	
	22.00		32.00		7.00	

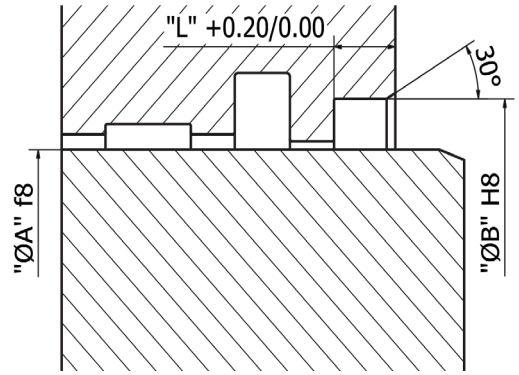

22.00

Part No	WPW 0220 0280 050					
Groove Dimension	ØA	x	ØB	x	L	
	22.00		28.00		5.00	

22.00

Part No	WPW 0220 0320 050					
Groove Dimension	ØA	x	ØB	x	L	
	22.00		32.00		5.00	

25.00

Part No	WPW 0250 0350 050					
Groove Dimension	ØA	x	ØB	x	L	
	25.00		35.00		5.00	

28.00

Part No	WPW 0280 0400 070					
Groove Dimension	ØA	x	ØB	x	L	
	28.00		40.00		7.00	

28.00

Part No	WPW 0280 0380 050					
Groove Dimension	ØA	x	ØB	x	L	
	28.00		38.00		5.00	

30.00

Part No	WPW 0300 0450 050					
Groove Dimension	ØA	x	ØB	x	L	
	30.00		45.00		5.00	

32.00

Part No	WPW 0320 0450 070					
Groove Dimension	ØA	x	ØB	x	L	
	32.00		45.00		7.00	

32.00

Part No	WPW 0320 0450 040					
Groove Dimension	ØA	x	ØB	x	L	
	32.00		45.00		4.00	

32.00

Part No	WPW 0320 0420 050					
Groove Dimension	ØA	x	ØB	x	L	
	32.00		42.00		5.00	

32.00

Part No	WPW 0320 0440 070					
Groove Dimension	ØA	x	ØB	x	L	
	32.00		44.00		7.00	

33.00

Part No	WPW 0330 0430 070					
Groove Dimension	ØA	x	ØB	x	L	
	33.00		43.00		7.00	

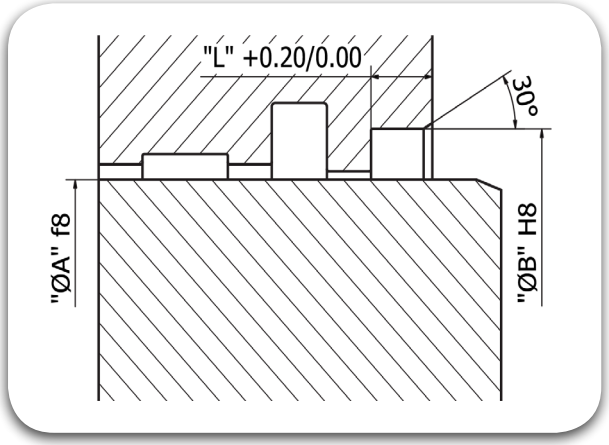

35.00

Part No	WPW 0350 0470 070					
Groove Dimension	ØA	x	ØB	x	L	
	35.00		47.00		7.00	

35.00

Part No	WPW 0350 0450 070					
Groove Dimension	ØA	x	ØB	x	L	
	35.00		45.00		7.00	

36.00

Part No	WPW 0360 0460 050					
Groove Dimension	ØA	x	ØB	x	L	
	36.00		46.00		5.00	

40.00

Part No	WPW 0400 0500 070					
Groove Dimension	ØA	x	ØB	x	L	
	40.00		50.00		7.00	

45.00

Part No	WPW 0450 0570 070					
Groove Dimension	ØA	x	ØB	x	L	
	45.00		57.00		7.00	

45.00

Part No	WPW 0450 0550 050					
Groove Dimension	ØA	x	ØB	x	L	
	45.00		55.00		5.00	

50.00

Part No	WPW 0500 0620 070					
Groove Dimension	ØA	x	ØB	x	L	
	50.00		62.00		7.00	

50.00

Part No	WPW 0500 0600 070					
Groove Dimension	ØA	x	ØB	x	L	
	50.00		60.00		7.00	

55.00

Part No	WPW 0550 0650 070					
Groove Dimension	ØA	x	ØB	x	L	
	55.00		65.00		7.00	

55.00

Part No	WPW 0550 0650 050					
Groove Dimension	ØA	x	ØB	x	L	
	55.00		65.00		5.00	

60.00

Part No	WPW 0600 0740 080					
Groove Dimension	ØA	x	ØB	x	L	
	60.00		74.00		8.00	

60.00

Part No	WPW 0600 0700 070					
Groove Dimension	ØA	x	ØB	x	L	
	60.00		70.00		7.00	

60.00

Part No	WPW 0600 0740 050					
Groove Dimension	ØA	x	ØB	x	L	
	60.00		74.00		5.00	

65.00

Part No	WPW 0650 0750 070					
Groove Dimension	ØA	x	ØB	x	L	
	65.00		75.00		7.00	

70.00

Part No	WPW 0700 0800 060					
Groove Dimension	ØA	x	ØB	x	L	
	70.00		80.00		6.00	

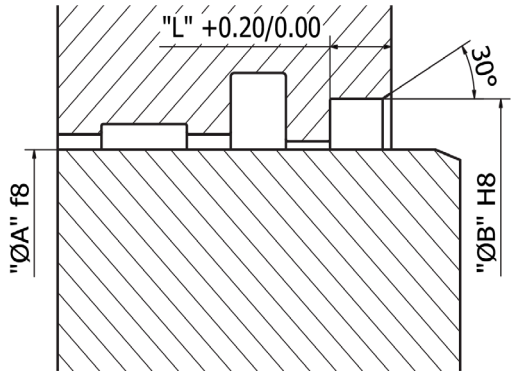

70.00

Part No	WPW 0700 0800 070					
Groove Dimension	ØA	x	ØB	x	L	
	70.00		80.00		7.00	

70.00

Part No	WPW 0700 0840 080					
Groove Dimension	ØA	x	ØB	x	L	
	70.00		84.00		8.00	

80.00

Part No	WPW 0800 0880 070					
Groove Dimension	ØA	x	ØB	x	L	
	80.00		88.00		7.00	

90.00

Part No	WPW 0900 1040 080					
Groove Dimension	ØA	x	ØB	x	L	
	90.00		104.00		8.00	

90.00

Part No	WPW 0900 1000 070					
Groove Dimension	ØA	x	ØB	x	L	
	90.00		100.00		7.00	

95.00

Part No	WPW 0950 1050 070					
Groove Dimension	ØA	x	ØB	x	L	
	95.00		105.00		7.00	

100.00

Part No	WPW 1000 1140 080					
Groove Dimension	ØA	x	ØB	x	L	
	100.00		114.00		8.00	

100.00

Part No	WPW 1000 1100 070					
Groove Dimension	ØA	x	ØB	x	L	
	100.00		110.00		7.00	

105.00

Part No	WPW 1050 1150 070					
Groove Dimension	ØA	x	ØB	x	L	
	105.00		115.00		7.00	

110.00

Part No	WPW 1100 1240 080					
Groove Dimension	ØA	x	ØB	x	L	
	110.00		124.00		8.00	

125.00

Part No	WPW 1250 1390 080					
Groove Dimension	ØA	x	ØB	x	L	
	125.00		139.00		8.00	

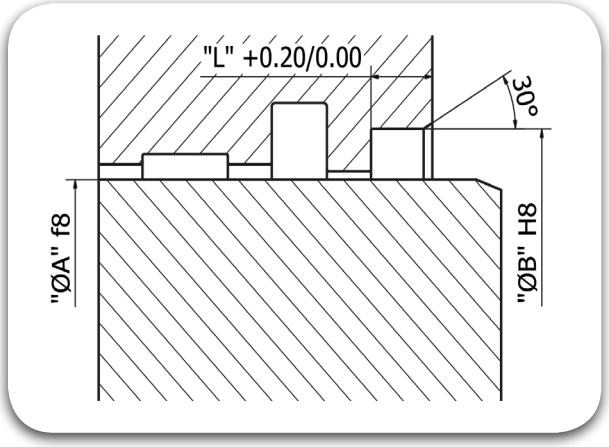

125.00

Part No	WPW 1250 1400 080
Groove Dimension	ØA 125.00 x ØB 140.00 x L 8.00

Wiper Seals

WSP

TRIADA
TECHNOLOGIES

#Sealing**Excellence**






Description

The WSP is a single acting Wiper with metal integration, which supports the lip to wipe the debris, condensation or undesired deposits on the Rod surface, preventing them from entering into the system, thus eliminating the damage for other seals and internal components.

These Seals are well known for their application as “PIN SEALS”, owing to its smaller widths (for selected dimensions) and excellent grease retention characteristics.This Wiper can also be used for slow Rotary/ oscillation applications

Diameter Range	Ø25.00 – Ø190.00 (Larger dia. on request)
Standard material	TRIATHANE® T479 (Poly-Urethane)
Temperature(°C)	- 35°C to 110°C
Speed	≤ 0.50 m/s
Fluids	Hydraulic fluids (Mineral Oil based)

Material Details

Seal Material	Seal Material / Code
TRIATHANE®	Poly-Urethane T479

Nomenclature

Part No	WSP	1000	1150	050	T479
	Seal profile	Rod Dia x 10	Groove Dia x 10	Groove Width x 10	Seal Material Code

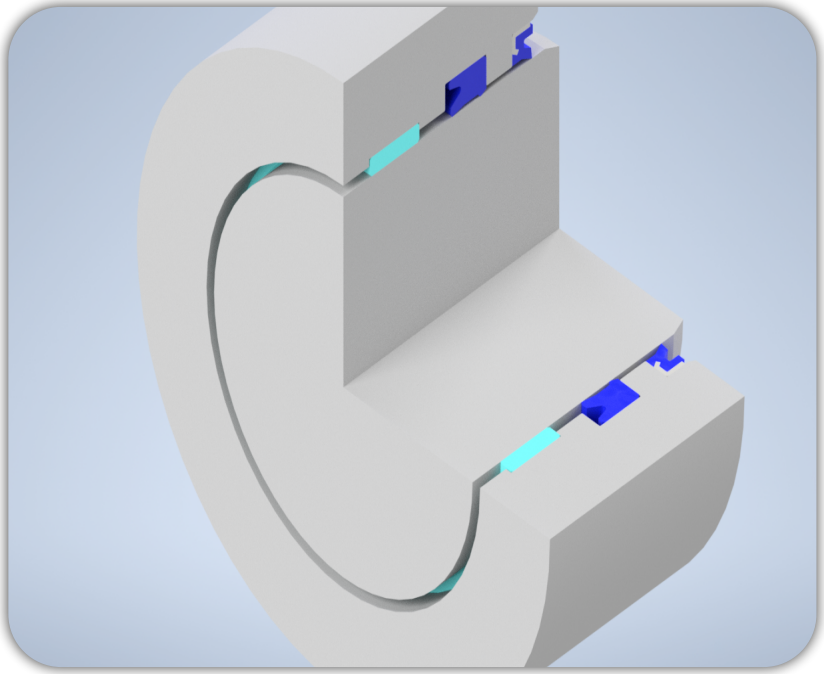

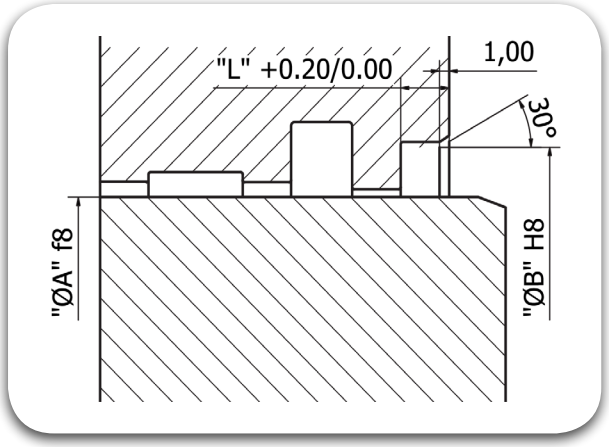

25.00

Part No	WSP 0250 0350 050					
Groove Dimension	ØA	x	ØB	x	L	
	25.00		35.00		5.00	

25.00

Part No	WSP 0250 0380 085					
Groove Dimension	ØA	x	ØB	x	L	
	25.00		38.00		8.50	

30.00

Part No	WSP 0300 0400 050					
Groove Dimension	ØA	x	ØB	x	L	
	30.00		40.00		5.00	

30.00

Part No	WSP 0300 0430 085					
Groove Dimension	ØA	x	ØB	x	L	
	30.00		43.00		8.50	

35.00

Part No	WSP 0350 0450 050					
Groove Dimension	ØA	x	ØB	x	L	
	35.00		45.00		5.00	

35.00

Part No	WSP 0350 0450 060					
Groove Dimension	ØA	x	ØB	x	L	
	35.00		45.00		6.00	

35.00

Part No	WSP 0350 0470 080					
Groove Dimension	ØA	x	ØB	x	L	
	35.00		47.00		8.00	

35.00

Part No	WSP 0350 0500 085					
Groove Dimension	ØA	x	ØB	x	L	
	35.00		50.00		8.50	

38.00

Part No	WSP 0380 0500 085					
Groove Dimension	ØA	x	ØB	x	L	
	38.00		50.00		8.50	

40.00

Part No	WSP 0400 0500 050					
Groove Dimension	ØA	x	ØB	x	L	
	40.00		50.00		5.00	

40.00

Part No	WSP 0400 0520 080					
Groove Dimension	ØA	x	ØB	x	L	
	40.00		52.00		8.00	

45.00

Part No	WSP 0450 0550 042					
Groove Dimension	ØA	x	ØB	x	L	
	45.00		55.00		4.20	

45.00

Part No	WSP 0450 0550 050					
Groove Dimension	ØA	x	ØB	x	L	
	45.00		55.00		5.00	

45.00

Part No	WSP 0450 0550 070
Groove Dimension	ØA 45.00 x ØB 55.00 x L 7.00

45.00

Part No	WSP 0450 0570 080
Groove Dimension	ØA 45.00 x ØB 57.00 x L 8.00

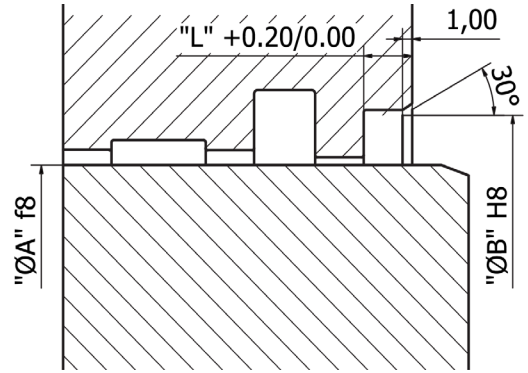

45.00

Part No	WSP 0450 0600 060
Groove Dimension	ØA 45.00 x ØB 60.00 x L 6.00

45.00

Part No	WSP 0450 0600 085
Groove Dimension	ØA 45.00 x ØB 60.00 x L 8.50

50.00

Part No	WSP 0500 0600 050
Groove Dimension	ØA 50.00 x ØB 60.00 x L 5.00

50.00

Part No	WSP 0500 0600 060
Groove Dimension	ØA 50.00 x ØB 60.00 x L 6.00

50.00

Part No	WSP 0500 0600 080
Groove Dimension	ØA 50.00 x ØB 60.00 x L 8.00

50.00

Part No	WSP 0500 0620 080
Groove Dimension	ØA 50.00 x ØB 62.00 x L 8.00

50.00

Part No	WSP 0500 0630 050
Groove Dimension	ØA 50.00 x ØB 63.00 x L 5.00

50.00

Part No	WSP 0500 0630 090
Groove Dimension	ØA 50.00 x ØB 63.00 x L 9.00

50.00

Part No	WSP 0500 0650 060
Groove Dimension	ØA 50.00 x ØB 65.00 x L 6.00

50.00

Part No	WSP 0500 0650 085
Groove Dimension	ØA 50.00 x ØB 65.00 x L 8.50

55.00

Part No	WSP 0550 0650 042
Groove Dimension	ØA 55.00 x ØB 65.00 x L 4.20

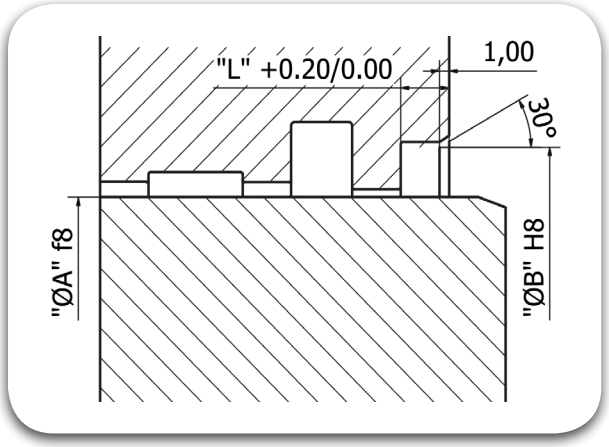

55.00

Part No	WSP 0550 0650 050		
Groove Dimension	ØA	ØB	L
	55.00	65.00	5.00

55.00

Part No	WSP 0550 0680 050		
Groove Dimension	ØA	ØB	L
	55.00	68.00	5.00

55.00

Part No	WSP 0550 0690 090		
Groove Dimension	ØA	ØB	L
	55.00	69.00	9.00

55.00

Part No	WSP 0550 0700 060		
Groove Dimension	ØA	ØB	L
	55.00	70.00	6.00

55.00

Part No	WSP 0550 0700 085		
Groove Dimension	ØA	ØB	L
	55.00	70.00	8.50

56.00

Part No	WSP 0560 0700 085		
Groove Dimension	ØA	ØB	L
	56.00	70.00	8.50

60.00

Part No	WSP 0600 0700 050		
Groove Dimension	ØA	ØB	L
	60.00	70.00	5.00

60.00

Part No	WSP 0600 0700 080		
Groove Dimension	ØA	ØB	L
	60.00	70.00	8.00

60.00

Part No	WSP 0600 0730 090		
Groove Dimension	ØA	ØB	L
	60.00	73.00	9.00

60.00

Part No	WSP 0600 0740 090		
Groove Dimension	ØA	ØB	L
	60.00	74.00	9.00

60.00

Part No	WSP 0600 0750 050		
Groove Dimension	ØA	ØB	L
	60.00	75.00	5.00

60.00

Part No	WSP 0600 0750 060		
Groove Dimension	ØA	ØB	L
	60.00	75.00	6.00

60.00

Part No	WSP 0600 0750 085		
Groove Dimension	ØA	ØB	L
	60.00	75.00	8.50

63.00

Part No	WSP 0630 0780 085					
Groove Dimension	ØA	x	ØB	x	L	
	63.00		78.00		8.50	

63.00

Part No	WSP 0630 0800 060					
Groove Dimension	ØA	x	ØB	x	L	
	63.00		80.00		6.00	

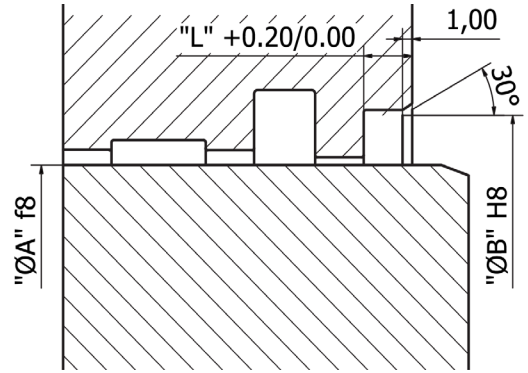

65.00

Part No	WSP 0650 0790 090					
Groove Dimension	ØA	x	ØB	x	L	
	65.00		79.00		9.00	

65.00

Part No	WSP 0650 0800 060					
Groove Dimension	ØA	x	ØB	x	L	
	65.00		80.00		6.00	

65.00

Part No	WSP 0650 0800 090					
Groove Dimension	ØA	x	ØB	x	L	
	65.00		80.00		9.00	

70.00

Part No	WSP 0700 0800 060					
Groove Dimension	ØA	x	ØB	x	L	
	70.00		80.00		6.00	

70.00

Part No	WSP 0700 0800 080					
Groove Dimension	ØA	x	ØB	x	L	
	70.00		80.00		8.00	

70.00

Part No	WSP 0700 0800 050					
Groove Dimension	ØA	x	ØB	x	L	
	70.00		80.00		5.00	

70.00

Part No	WSP 0700 0830 090					
Groove Dimension	ØA	x	ØB	x	L	
	70.00		83.00		9.00	

70.00

Part No	WSP 0700 0840 090					
Groove Dimension	ØA	x	ØB	x	L	
	70.00		84.00		9.00	

70.00

Part No	WSP 0700 0850 050					
Groove Dimension	ØA	x	ØB	x	L	
	70.00		85.00		5.00	

70.00

Part No	WSP 0700 0850 060					
Groove Dimension	ØA	x	ØB	x	L	
	70.00		85.00		6.00	

70.00

Part No	WSP 0700 0850 085					
Groove Dimension	ØA	x	ØB	x	L	
	70.00		85.00		8.50	

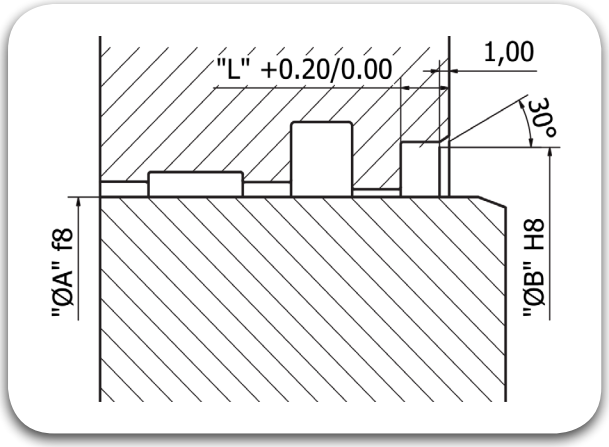

70.00

Part No	WSP 0700 0850 090		
Groove Dimension	ØA	ØB	L
	70.00	85.00	9.00

70.00

Part No	WSP 0700 0900 060		
Groove Dimension	ØA	ØB	L
	70.00	90.00	6.00

71.00

Part No	WSP 0710 0850 070		
Groove Dimension	ØA	ØB	L
	71.00	85.00	7.00

71.00

Part No	WSP 0710 0860 060		
Groove Dimension	ØA	ØB	L
	71.00	86.00	6.00

75.00

Part No	WSP 0750 0890 090		
Groove Dimension	ØA	ØB	L
	75.00	89.00	9.00

75.00

Part No	WSP 0750 0900 070		
Groove Dimension	ØA	ØB	L
	75.00	90.00	7.00

75.00

Part No	WSP 0750 0900 090		
Groove Dimension	ØA	ØB	L
	75.00	90.00	9.00

75.00

Part No	WSP 0750 0950 110		
Groove Dimension	ØA	ØB	L
	75.00	95.00	11.00

76.50

Part No	WSP 0765 0965 110		
Groove Dimension	ØA	ØB	L
	76.50	96.50	11.00

76.00

Part No	WSP 0760 1000 110		
Groove Dimension	ØA	ØB	L
	76.00	100.00	11.00

80.00

Part No	WSP 0800 0900 055		
Groove Dimension	ØA	ØB	L
	80.00	90.00	5.50

80.00

Part No	WSP 0800 0900 080		
Groove Dimension	ØA	ØB	L
	80.00	90.00	8.00

80.00

Part No	WSP 0800 0930 090		
Groove Dimension	ØA	ØB	L
	80.00	93.00	9.00

80.00

Part No	WSP 0800 0940 090					
Groove Dimension	ØA	x	ØB	x	L	
	80.00		94.00		9.00	

80.00

Part No	WSP 0800 0950 060					
Groove Dimension	ØA	x	ØB	x	L	
	80.00		95.00		6.00	

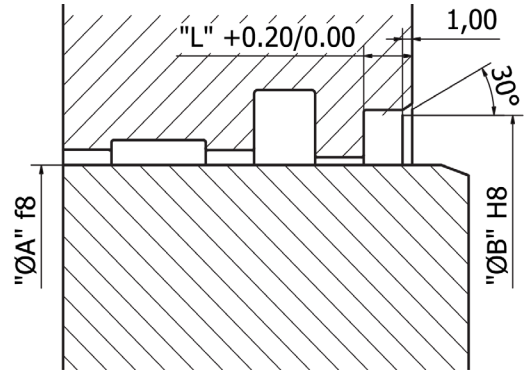

80.00

Part No	WSP 0800 0950 085					
Groove Dimension	ØA	x	ØB	x	L	
	80.00		95.00		8.50	

80.00

Part No	WSP 0800 0950 090					
Groove Dimension	ØA	x	ØB	x	L	
	80.00		95.00		9.00	

80.00

Part No	WSP 0800 1000 070					
Groove Dimension	ØA	x	ØB	x	L	
	80.00		100.00		7.00	

80.00

Part No	WSP 0800 1000 110					
Groove Dimension	ØA	x	ØB	x	L	
	80.00		100.00		11.00	

85.00

Part No	WSP 0850 0990 090					
Groove Dimension	ØA	x	ØB	x	L	
	85.00		99.00		9.00	

85.00

Part No	WSP 0850 1000 070					
Groove Dimension	ØA	x	ØB	x	L	
	85.00		100.00		7.00	

85.00

Part No	WSP 0850 1000 050					
Groove Dimension	ØA	x	ØB	x	L	
	85.00		100.00		5.00	

85.00

Part No	WSP 0850 1000 090					
Groove Dimension	ØA	x	ØB	x	L	
	85.00		100.00		9.00	

85.00

Part No	WSP 0850 1000 110					
Groove Dimension	ØA	x	ØB	x	L	
	85.00		100.00		11.00	

85.00

Part No	WSP 0850 1050 110					
Groove Dimension	ØA	x	ØB	x	L	
	85.00		105.00		11.00	

90.00

Part No	WSP 0900 1000 080					
Groove Dimension	ØA	x	ØB	x	L	
	90.00		100.00		8.00	

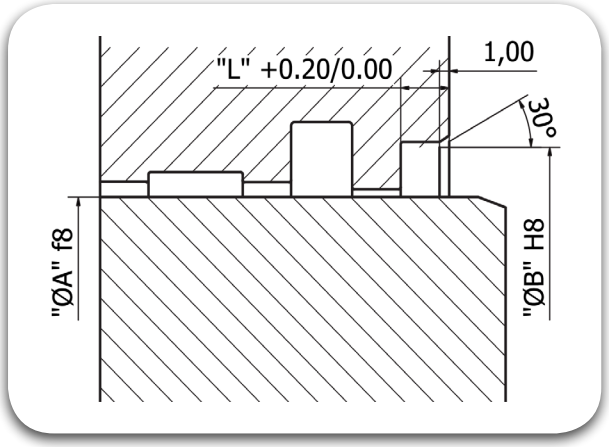

90.00

Part No	WSP 0900 1040 090					
Groove Dimension	ØA	x	ØB	x	L	
	90.00		104.00		9.00	

90.00

Part No	WSP 0900 1050 060					
Groove Dimension	ØA	x	ØB	x	L	
	90.00		105.00		6.00	

90.00

Part No	WSP 0900 1050 070					
Groove Dimension	ØA	x	ØB	x	L	
	90.00		105.00		7.00	

90.00

Part No	WSP 0900 1050 090					
Groove Dimension	ØA	x	ØB	x	L	
	90.00		105.00		9.00	

90.00

Part No	WSP 0900 1100 110					
Groove Dimension	ØA	x	ØB	x	L	
	90.00		110.00		11.00	

95.00

Part No	WSP 0950 1090 090					
Groove Dimension	ØA	x	ØB	x	L	
	95.00		109.00		9.00	

95.00

Part No	WSP 0950 1100 090					
Groove Dimension	ØA	x	ØB	x	L	
	95.00		110.00		9.00	

95.00

Part No	WSP 0950 1100 070					
Groove Dimension	ØA	x	ØB	x	L	
	95.00		110.00		7.00	

95.00

Part No	WSP 0950 1150 110					
Groove Dimension	ØA	x	ØB	x	L	
	95.00		115.00		11.00	

100.00

Part No	WSP 1000 1140 090					
Groove Dimension	ØA	x	ØB	x	L	
	100.00		114.00		9.00	

100.00

Part No	WSP 1000 1150 050					
Groove Dimension	ØA	x	ØB	x	L	
	100.00		115.00		5.00	

100.00

Part No	WSP 1000 1150 060					
Groove Dimension	ØA	x	ØB	x	L	
	100.00		115.00		6.00	

100.00

Part No	WSP 1000 1150 070					
Groove Dimension	ØA	x	ØB	x	L	
	100.00		115.00		7.00	

100.00

Part No	WSP 1000 1150 085		
Groove Dimension	ØA	ØB	L
	100.00	115.00	8.50

100.00

Part No	WSP 1000 1200 110		
Groove Dimension	ØA	ØB	L
	100.00	120.00	11.00

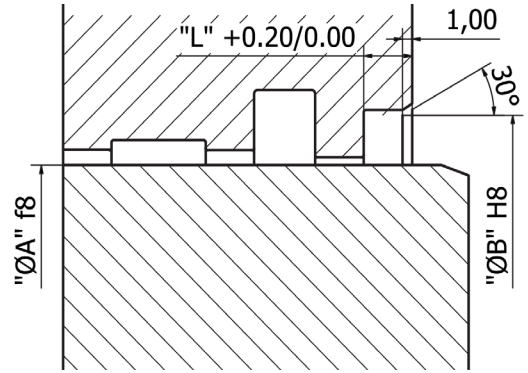

100.00

Part No	WSP 1000 1250 050		
Groove Dimension	ØA	ØB	L
	100.00	125.00	5.00

105.00

Part No	WSP 1050 1200 080		
Groove Dimension	ØA	ØB	L
	105.00	120.00	8.00

105.00

Part No	WSP 1050 1200 090		
Groove Dimension	ØA	ØB	L
	105.00	120.00	9.00

105.00

Part No	WSP 1050 1210 100		
Groove Dimension	ØA	ØB	L
	105.00	121.00	10.00

110.00

Part No	WSP 1100 1250 050		
Groove Dimension	ØA	ØB	L
	110.00	125.00	5.00

110.00

Part No	WSP 1100 1250 100		
Groove Dimension	ØA	ØB	L
	110.00	125.00	10.00

110.00

Part No	WSP 1100 1260 100		
Groove Dimension	ØA	ØB	L
	110.00	126.00	10.00

110.00

Part No	WSP 1100 1300 110		
Groove Dimension	ØA	ØB	L
	110.00	130.00	11.00

115.00

Part No	WSP 1150 1300 085		
Groove Dimension	ØA	ØB	L
	115.00	130.00	8.50

115.00

Part No	WSP 1150 1310 100		
Groove Dimension	ØA	ØB	L
	115.00	131.00	10.00

120.00

Part No	WSP 1200 1350 080		
Groove Dimension	ØA	ØB	L
	120.00	135.00	8.00

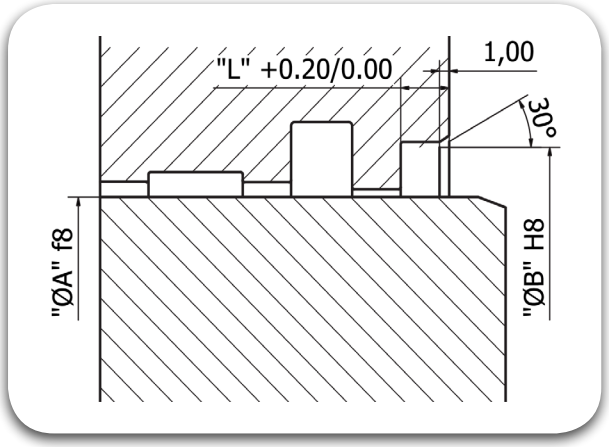

120.00

Part No	WSP 1200 1350 090		
Groove Dimension	ØA	ØB	L
	120.00	135.00	9.00

120.00

Part No	WSP 1200 1360 100		
Groove Dimension	ØA	ØB	L
	120.00	136.00	10.00

120.00

Part No	WSP 1200 1400 090		
Groove Dimension	ØA	ØB	L
	120.00	140.00	9.00

120.00

Part No	WSP 1200 1400 110		
Groove Dimension	ØA	ØB	L
	120.00	140.00	11.00

125.00

Part No	WSP 1250 1400 090		
Groove Dimension	ØA	ØB	L
	125.00	140.00	9.00

125.00

Part No	WSP 1250 1410 100		
Groove Dimension	ØA	ØB	L
	125.00	141.00	10.00

125.00

Part No	WSP 1250 1450 110		
Groove Dimension	ØA	ØB	L
	125.00	145.00	11.00

130.00

Part No	WSP 1300 1450 085		
Groove Dimension	ØA	ØB	L
	130.00	145.00	8.50

130.00

Part No	WSP 1300 1460 100		
Groove Dimension	ØA	ØB	L
	130.00	146.00	10.00

130.00

Part No	WSP 1300 1500 110		
Groove Dimension	ØA	ØB	L
	130.00	150.00	11.00

140.00

Part No	WSP 1400 1550 090		
Groove Dimension	ØA	ØB	L
	140.00	155.00	9.00

140.00

Part No	WSP 1400 1600 110		
Groove Dimension	ØA	ØB	L
	140.00	160.00	11.00

150.00

Part No	WSP 1500 1700 110		
Groove Dimension	ØA	ØB	L
	150.00	170.00	11.00

160.00

Part No	WSP 1600 1750 110					
Groove Dimension	ØA	x	ØB	x	L	
	160.00		175.00		11.00	

190.00

Part No	WSP 1900 2100 110					
Groove Dimension	ØA	x	ØB	x	L	
	190.00		210.00		11.00	

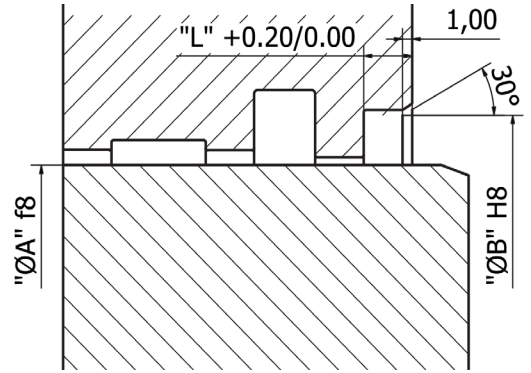

Wiper Seals

WDL

TRIADA
TECHNOLOGIES

#SealingExcellence






Description

The WDL Wiper is a Double Lip Wiper with a steel casing, enabling an open groove installation. The Inner Lip retains the thin film of Hydraulic Oil allowed to sneak through by the Primary/Secondary Seals, whereas the Outer Lip checks the entry of debris/solid particles entering into the system, protecting the Sealing System as well as other internal components. Highly recommended as a Wiper Seal in highly demanding applications like Off-Road Equipment Cylinders, Material Handling Equipment Cylinders etc.

Diameter Range	Ø20.00 – Ø180.00 (Larger dia. on request)
Standard material	TRIATHANE® T479 (Poly-Urethane)
Temperature(°C)	- 35°C to 110°C
Speed	≤ 1.00 m/s
Fluids	Hydraulic fluids (Mineral Oil based)

Material Details

Seal Material	Seal Material / Code
TRIATHANE®	Poly-Urethane T479

Nomenclature

Part No	WDL	1000	1140	080	T479
	Seal profile	Rod Dia x 10	Groove Dia x 10	Groove Width x 10	Seal Material Code

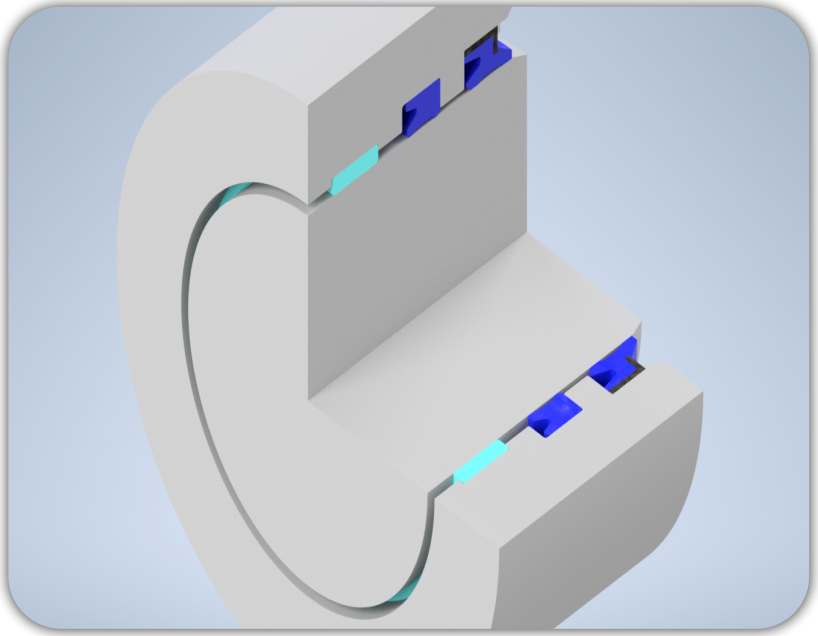

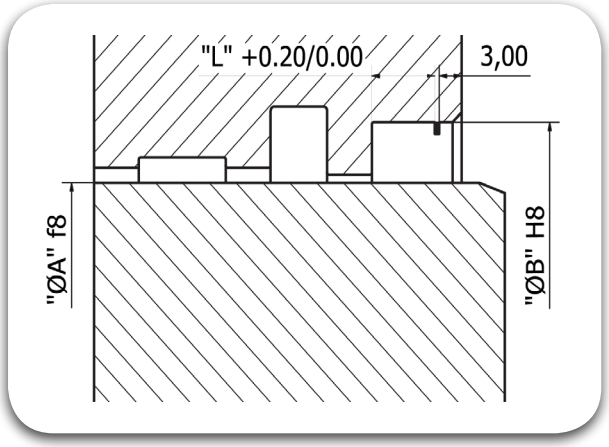

20.00

Part No	WDL 0200 0320 060				
Groove Dimension	ØA	x	ØB	x	L
	20.00		32.00		6.00

22.00

Part No	WDL 0220 0340 060				
Groove Dimension	ØA	x	ØB	x	L
	22.00		34.00		6.00

25.00

Part No	WDL 0250 0370 060				
Groove Dimension	ØA	x	ØB	x	L
	25.00		37.00		6.00

30.00

Part No	WDL 0300 0420 060				
Groove Dimension	ØA	x	ØB	x	L
	30.00		42.00		6.00

35.00

Part No	WDL 0350 0470 070				
Groove Dimension	ØA	x	ØB	x	L
	35.00		47.00		7.00

40.00

Part No	WDL 0400 0520 070				
Groove Dimension	ØA	x	ØB	x	L
	40.00		52.00		7.00

45.00

Part No	WDL 0450 0570 070				
Groove Dimension	ØA	x	ØB	x	L
	45.00		57.00		7.00

50.00

Part No	WDL 0500 0620 070				
Groove Dimension	ØA	x	ØB	x	L
	50.00		62.00		7.00

55.00

Part No	WDL 0550 0690 080				
Groove Dimension	ØA	x	ØB	x	L
	55.00		69.00		8.00

60.00

Part No	WDL 0600 0740 080				
Groove Dimension	ØA	x	ØB	x	L
	60.00		74.00		8.00

65.00

Part No	WDL 0650 0790 080				
Groove Dimension	ØA	x	ØB	x	L
	65.00		79.00		8.00

70.00

Part No	WDL 0700 0840 080				
Groove Dimension	ØA	x	ØB	x	L
	70.00		84.00		8.00

75.00

Part No	WDL 0750 0890 080				
Groove Dimension	ØA	x	ØB	x	L
	75.00		89.00		8.00

80.00

Part No	WDL 0800 0940 080					
Groove Dimension	ØA	x	ØB	x	L	
	80.00		94.00		8.00	

85.00

Part No	WDL 0850 0990 080					
Groove Dimension	ØA	x	ØB	x	L	
	85.00		99.00		8.00	

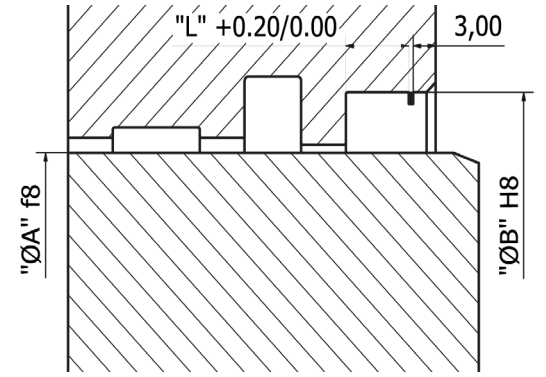

90.00

Part No	WDL 0900 1040 080					
Groove Dimension	ØA	x	ØB	x	L	
	90.00		104.00		8.00	

95.00

Part No	WDL 0950 1090 080					
Groove Dimension	ØA	x	ØB	x	L	
	95.00		109.00		8.00	

100.00

Part No	WDL 1000 1140 080					
Groove Dimension	ØA	x	ØB	x	L	
	100.00		114.00		8.00	

105.00

Part No	WDL 1050 1210 090					
Groove Dimension	ØA	x	ØB	x	L	
	105.00		121.00		9.00	

110.00

Part No	WDL 1100 1260 090					
Groove Dimension	ØA	x	ØB	x	L	
	110.00		126.00		9.00	

115.00

Part No	WDL 1150 1310 090					
Groove Dimension	ØA	x	ØB	x	L	
	115.00		131.00		9.00	

120.00

Part No	WDL 1200 1360 090					
Groove Dimension	ØA	x	ØB	x	L	
	120.00		136.00		9.00	

125.00

Part No	WDL 1250 1410 090					
Groove Dimension	ØA	x	ØB	x	L	
	125.00		141.00		9.00	

130.00

Part No	WDL 1300 1460 090					
Groove Dimension	ØA	x	ØB	x	L	
	130.00		146.00		9.00	

135.00

Part No	WDL 1350 1550 100					
Groove Dimension	ØA	x	ØB	x	L	
	135.00		155.00		10.00	

140.00

Part No	WDL 1400 1600 100					
Groove Dimension	ØA	x	ØB	x	L	
	140.00		160.00		10.00	

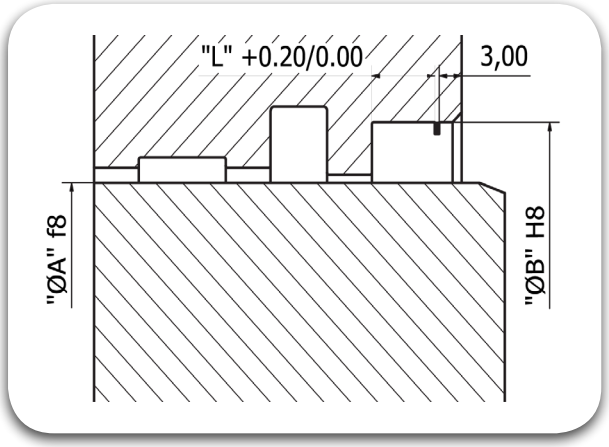

145.00

Part No	WDL 1450 1650 100					
Groove Dimension	ØA	x	ØB	x	L	
	145.00		165.00		10.00	

155.00

Part No	WDL 1550 1750 100					
Groove Dimension	ØA	x	ØB	x	L	
	155.00		175.00		10.00	

160.00

Part No	WDL 1600 1800 100					
Groove Dimension	ØA	x	ØB	x	L	
	160.00		180.00		10.00	

165.00

Part No	WDL 1650 1850 100					
Groove Dimension	ØA	x	ØB	x	L	
	165.00		185.00		10.00	

170.00

Part No	WDL 1700 1900 100					
Groove Dimension	ØA	x	ØB	x	L	
	170.00		190.00		10.00	

175.00

Part No	WDL 1750 1950 100					
Groove Dimension	ØA	x	ØB	x	L	
	175.00		195.00		10.00	

180.00

Part No	WDL 1800 2050 100					
Groove Dimension	ØA	x	ØB	x	L	
	180.00		205.00		10.00	

Wiper Seals

WGP

TRIADA
TECHNOLOGIES

#Sealing**Excellence**






Description

The WGP is a single acting Wiper in TRIATHANE®(Poly-Urethane) with metal integration which supports the lip to wipe the solid matter on the rod surface preventing it from entering into the system, thus eliminating the damage to other seals and internal components.

Diameter Range	Ø20.00 – Ø180.00 (Larger dia. on request)
Standard material	TRIATHANE® T479 (Poly-Urethane)
Temperature(°C)	- 35°C to 110°C
Speed	< 1.00 m/s
Fluids	Water at room temperature and Mineral Oils

Material Details

Seal Material	Seal Material / Code
TRIATHANE®	Poly-Urethane T479

Nomenclature

Part No	WGP	1000	1100	070	T479
	Seal profile	Rod Dia x 10	Groove Dia x 10	Groove Width x 10	Seal Material Code

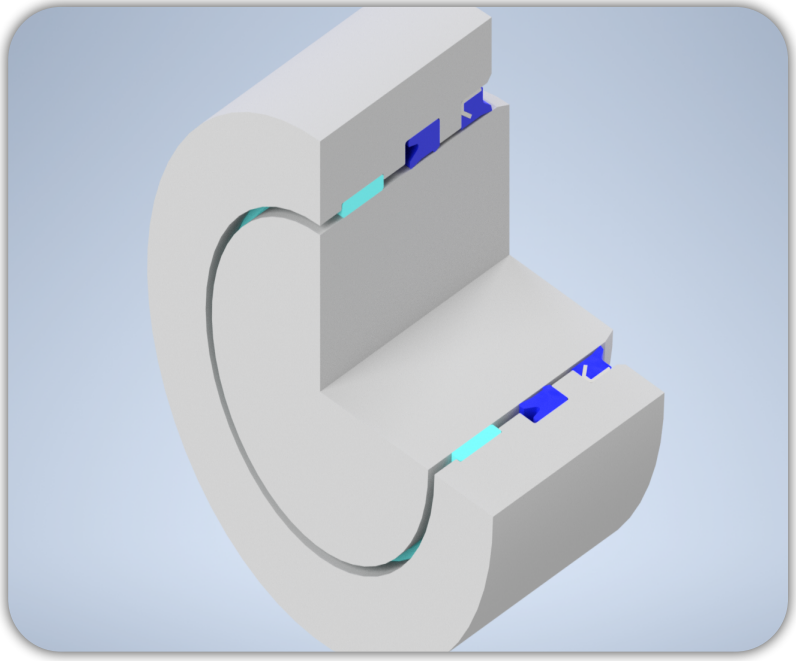

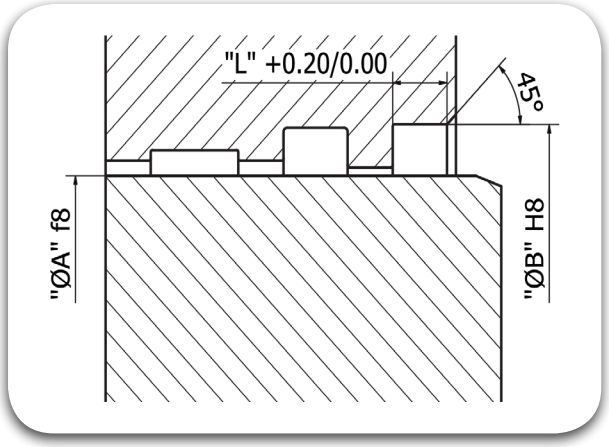

12.00

Part No	WGP 0120 0200 040					
Groove Dimension	ØA	x	ØB	x	L	
	12.00		20.00		4.00	

16.00

Part No	WGP 0160 0220 030					
Groove Dimension	ØA	x	ØB	x	L	
	16.00		22.00		3.00	

20.00

Part No	WGP 0200 0300 070					
Groove Dimension	ØA	x	ØB	x	L	
	20.00		30.00		7.00	

25.00

Part No	WGP 0250 0350 050					
Groove Dimension	ØA	x	ØB	x	L	
	25.00		35.00		5.00	

25.00

Part No	WGP 0250 0350 070					
Groove Dimension	ØA	x	ØB	x	L	
	25.00		35.00		7.00	

28.00

Part No	WGP 0280 0380 070					
Groove Dimension	ØA	x	ØB	x	L	
	28.00		38.00		7.00	

30.00

Part No	WGP 0300 0400 050					
Groove Dimension	ØA	x	ØB	x	L	
	30.00		40.00		5.00	

30.00

Part No	WGP 0300 0400 070					
Groove Dimension	ØA	x	ØB	x	L	
	30.00		40.00		7.00	

32.00

Part No	WGP 0320 0420 070					
Groove Dimension	ØA	x	ØB	x	L	
	32.00		42.00		7.00	

35.00

Part No	WGP 0350 0450 050					
Groove Dimension	ØA	x	ØB	x	L	
	35.00		45.00		5.00	

35.00

Part No	WGP 0350 0450 070					
Groove Dimension	ØA	x	ØB	x	L	
	35.00		45.00		7.00	

36.00

Part No	WGP 0360 0450 070					
Groove Dimension	ØA	x	ØB	x	L	
	36.00		45.00		7.00	

36.00

Part No	WGP 0360 0460 040					
Groove Dimension	ØA	x	ØB	x	L	
	36.00		46.00		4.00	

40.00

Part No	WGP 0400 0500 050		
Groove Dimension	ØA	ØB	L
	40.00	50.00	5.00

40.00

Part No	WGP 0400 0500 070		
Groove Dimension	ØA	ØB	L
	40.00	50.00	7.00

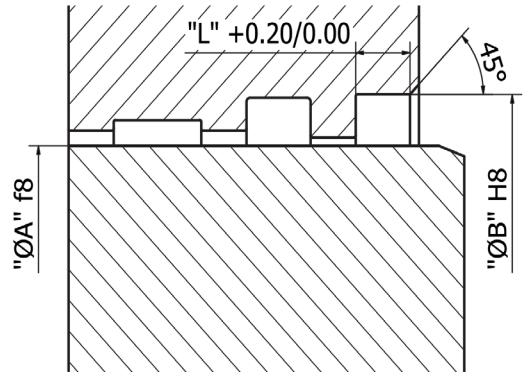

45.00

Part No	WGP 0450 0550 050		
Groove Dimension	ØA	ØB	L
	45.00	55.00	5.00

45.00

Part No	WGP 0450 0550 070		
Groove Dimension	ØA	ØB	L
	45.00	55.00	7.00

45.00

Part No	WGP 0450 0600 070		
Groove Dimension	ØA	ØB	L
	45.00	60.00	7.00

50.00

Part No	WGP 0500 0600 050		
Groove Dimension	ØA	ØB	L
	50.00	60.00	5.00

50.00

Part No	WGP 0500 0600 070		
Groove Dimension	ØA	ØB	L
	50.00	60.00	7.00

55.00

Part No	WGP 0550 0650 050		
Groove Dimension	ØA	ØB	L
	55.00	65.00	5.00

56.00

Part No	WGP 0560 0660 070		
Groove Dimension	ØA	ØB	L
	56.00	66.00	7.00

60.00

Part No	WGP 0600 0700 070		
Groove Dimension	ØA	ØB	L
	60.00	70.00	7.00

63.00

Part No	WGP 0630 0750 070		
Groove Dimension	ØA	ØB	L
	63.00	75.00	7.00

65.00

Part No	WGP 0650 0750 070		
Groove Dimension	ØA	ØB	L
	65.00	75.00	7.00

70.00

Part No	WGP 0700 0800 070		
Groove Dimension	ØA	ØB	L
	70.00	80.00	7.00

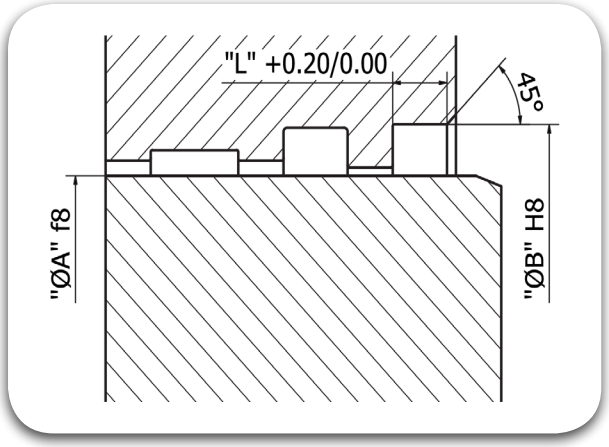

75.00

Part No	WGP 0750 0850 070				
Groove Dimension	ØA	x	ØB	x	L
	75.00		85.00		7.00

80.00

Part No	WGP 0800 0900 070				
Groove Dimension	ØA	x	ØB	x	L
	80.00		90.00		7.00

85.00

Part No	WGP 0850 0950 070				
Groove Dimension	ØA	x	ØB	x	L
	85.00		95.00		7.00

90.00

Part No	WGP 0900 1000 070				
Groove Dimension	ØA	x	ØB	x	L
	90.00		100.00		7.00

100.00

Part No	WGP 1000 1100 070				
Groove Dimension	ØA	x	ØB	x	L
	100.00		110.00		7.00

105.00

Part No	WGP 1050 1150 070				
Groove Dimension	ØA	x	ØB	x	L
	105.00		115.00		7.00

110.00

Part No	WGP 1100 1200 070				
Groove Dimension	ØA	x	ØB	x	L
	110.00		120.00		7.00

115.00

Part No	WGP 1150 1250 070				
Groove Dimension	ØA	x	ØB	x	L
	115.00		125.00		7.00

120.00

Part No	WGP 1200 1300 070				
Groove Dimension	ØA	x	ØB	x	L
	120.00		130.00		7.00

125.00

Part No	WGP 1250 1400 090				
Groove Dimension	ØA	x	ØB	x	L
	125.00		140.00		9.00

140.00

Part No	WGP 1400 1550 090				
Groove Dimension	ØA	x	ØB	x	L
	140.00		155.00		9.00

180.00

Part No	WGP 1800 1950 090				
Groove Dimension	ØA	x	ØB	x	L
	180.00		195.00		9.00

Wiper Seals

WDC

TRIADA
TECHNOLOGIES

#Sealing**Excellence**




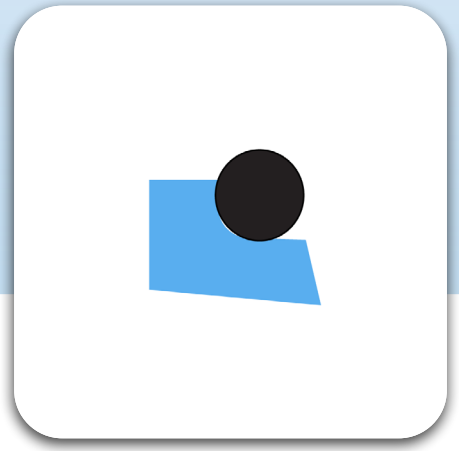

Description

The WDC Scraper is a single lip Wiper Seal, composed of two elements. The dynamic element is a ring in TRIALON® (compounded PTFE), while the static seal is an O-Ring in TRIAFLEX®(NBR), also acting as an energizer. Depending on the application, media, cycle speed etc., the PTFE compound is selected and the O-Ring compound is selected considering the media compatibility, temperature etc. The lip at the outer edge avoids the dust particles entering into the system for axially moving rods, thus eliminates the damage to other seals and internal components.

Diameter Range	Ø6.00 – Ø900.00 (Larger dia. on request)
Standard material	TRIALON® T415 (Bronze Filled PTFE) with Energiser in TRIAFLEX® T571 (NBR 70) (Other Compounds available,so as to suit the Application Conditions).
Temperature(°C)	-40°C to 200°C
Speed	< 15.00 m/s
Fluids	Mineral Oils

Material Details

Seal Material	Seal Material Code	O-Ring Material	O-Ring Material / Code
TRIALON® Bronze Filled PTFE	T415	TRIAFLEX® NBR 70	N (T571)
TRIALON® Carbon Filled PTFE	T417	TRIAFLEX® FKM 75	F (T675)
		TRIAFLEX® EPDM 70	E (T771)
		TRIAFLEX® HNBR 70	H (T531)

Nomenclature

Part No	WDC	1000	1088	060	T415	N
	Seal profile	Bore Dia x 10	Groove Dia x 10	Groove Width x 10	Seal Material Code	O-Ring Material Code

Groove Details

Groove Width "L"	Mouth Diameter "ØC"	Radius "Z"
3.70mm	'ØA' + 2.70mm	0.40
5.00mm	'ØA' + 3.50mm	0.70
6.00mm	'ØA' + 4.00mm	1.00
8.40mm	'ØA' + 4.50mm	1.20
11.00mm	'ØA' + 5.20mm	1.50
14.00mm	'ØA' + 6.20mm	2.00

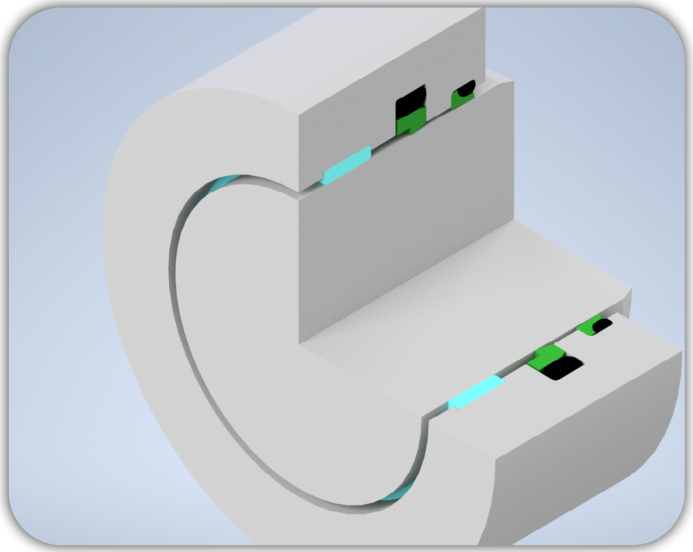

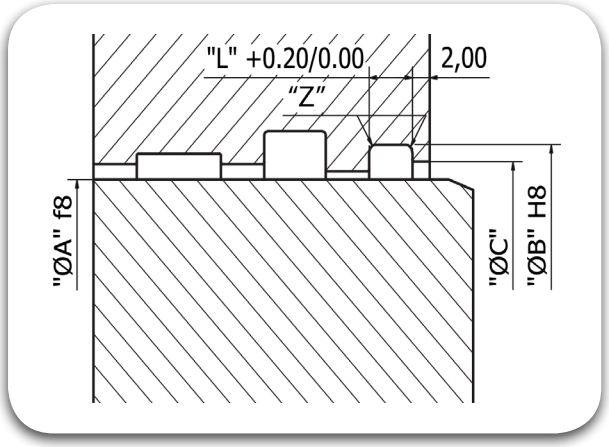

6.00

Part No	WDC 0060 0108 037					
Groove Dimension	ØA	x	ØB	x	L	
	6.00		10.80		3.70	

8.00

Part No	WDC 0080 0128 037					
Groove Dimension	ØA	x	ØB	x	L	
	8.00		12.80		3.70	

10.00

Part No	WDC 0100 0148 037					
Groove Dimension	ØA	x	ØB	x	L	
	10.00		14.80		3.70	

12.00

Part No	WDC 0120 0188 050					
Groove Dimension	ØA	x	ØB	x	L	
	12.00		18.80		5.00	

14.00

Part No	WDC 0140 0208 050					
Groove Dimension	ØA	x	ØB	x	L	
	14.00		20.80		5.00	

16.00

Part No	WDC 0160 0228 050					
Groove Dimension	ØA	x	ØB	x	L	
	16.00		22.80		5.00	

18.00

Part No	WDC 0180 0248 050					
Groove Dimension	ØA	x	ØB	x	L	
	18.00		24.80		5.00	

20.00

Part No	WDC 0200 0268 050					
Groove Dimension	ØA	x	ØB	x	L	
	20.00		26.80		5.00	

22.00

Part No	WDC 0220 0288 050					
Groove Dimension	ØA	x	ØB	x	L	
	22.00		28.80		5.00	

25.00

Part No	WDC 0250 0318 050					
Groove Dimension	ØA	x	ØB	x	L	
	25.00		31.80		5.00	

28.00

Part No	WDC 0280 0348 050					
Groove Dimension	ØA	x	ØB	x	L	
	28.00		34.80		5.00	

30.00

Part No	WDC 0300 0368 050					
Groove Dimension	ØA	x	ØB	x	L	
	30.00		36.80		5.00	

32.00

Part No	WDC 0320 0388 050					
Groove Dimension	ØA	x	ØB	x	L	
	32.00		38.80		5.00	

36.00

Part No	WDC 0360 0428 050					
Groove Dimension	ØA	x	ØB	x	L	
	36.00		42.80		5.00	

40.00

Part No	WDC 0400 0468 050					
Groove Dimension	ØA	x	ØB	x	L	
	40.00		46.80		5.00	

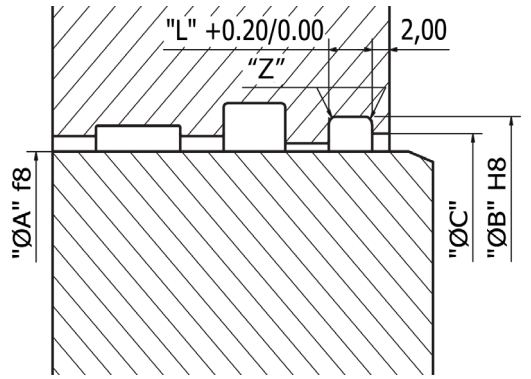

42.00

Part No	WDC 0420 0488 050					
Groove Dimension	ØA	x	ØB	x	L	
	42.00		48.80		5.00	

45.00

Part No	WDC 0450 0518 050					
Groove Dimension	ØA	x	ØB	x	L	
	45.00		51.80		5.00	

48.00

Part No	WDC 0480 0548 050					
Groove Dimension	ØA	x	ØB	x	L	
	48.00		54.80		5.00	

50.00

Part No	WDC 0500 0568 050					
Groove Dimension	ØA	x	ØB	x	L	
	50.00		56.80		5.00	

56.00

Part No	WDC 0560 0628 050					
Groove Dimension	ØA	x	ØB	x	L	
	56.00		62.80		5.00	

63.00

Part No	WDC 0630 0698 050					
Groove Dimension	ØA	x	ØB	x	L	
	63.00		69.80		5.00	

65.00

Part No	WDC 0650 0738 060					
Groove Dimension	ØA	x	ØB	x	L	
	65.00		73.80		6.00	

70.00

Part No	WDC 0700 0788 060					
Groove Dimension	ØA	x	ØB	x	L	
	70.00		78.80		6.00	

75.00

Part No	WDC 0750 0838 060					
Groove Dimension	ØA	x	ØB	x	L	
	75.00		83.80		6.00	

80.00

Part No	WDC 0800 0888 060					
Groove Dimension	ØA	x	ØB	x	L	
	80.00		88.80		6.00	

85.00

Part No	WDC 0850 0938 060					
Groove Dimension	ØA	x	ØB	x	L	
	85.00		93.80		6.00	

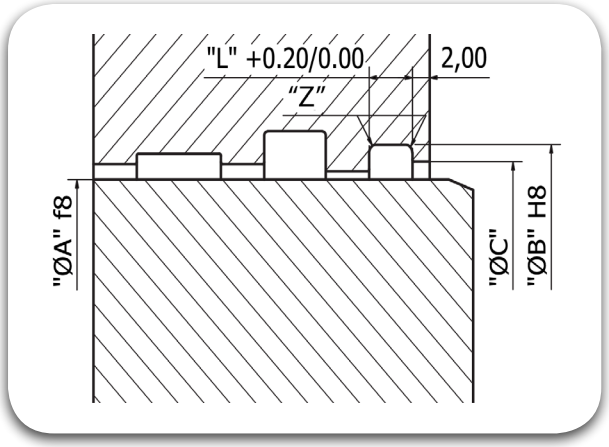

90.00

Part No	WDC 0900 0988 060					
Groove Dimension	ØA	x	ØB	x	L	
	90.00		98.80		6.00	

95.00

Part No	WDC 0950 1038 060					
Groove Dimension	ØA	x	ØB	x	L	
	95.00		103.80		6.00	

100.00

Part No	WDC 1000 1088 060					
Groove Dimension	ØA	x	ØB	x	L	
	100.00		108.80		6.00	

105.00

Part No	WDC 1050 1138 060					
Groove Dimension	ØA	x	ØB	x	L	
	105.00		113.80		6.00	

110.00

Part No	WDC 1100 1188 060					
Groove Dimension	ØA	x	ØB	x	L	
	110.00		118.80		6.00	

115.00

Part No	WDC 1150 1238 060					
Groove Dimension	ØA	x	ØB	x	L	
	115.00		123.80		6.00	

120.00

Part No	WDC 1200 1288 060					
Groove Dimension	ØA	x	ØB	x	L	
	120.00		128.80		6.00	

125.00

Part No	WDC 1250 1338 060					
Groove Dimension	ØA	x	ØB	x	L	
	125.00		133.80		6.00	

130.00

Part No	WDC 1300 1388 060					
Groove Dimension	ØA	x	ØB	x	L	
	130.00		138.80		6.00	

140.00

Part No	WDC 1400 1488 060					
Groove Dimension	ØA	x	ØB	x	L	
	140.00		148.80		6.00	

150.00

Part No	WDC 1500 1588 060					
Groove Dimension	ØA	x	ØB	x	L	
	150.00		158.80		6.00	

160.00

Part No	WDC 1600 1688 060					
Groove Dimension	ØA	x	ØB	x	L	
	160.00		168.80		6.00	

170.00

Part No	WDC 1700 1788 060					
Groove Dimension	ØA	x	ØB	x	L	
	170.00		178.80		6.00	

180.00

Part No	WDC 1800 1888 060		
Groove Dimension	ØA	ØB	L
	180.00	188.80	6.00

190.00

Part No	WDC 1900 1988 060		
Groove Dimension	ØA	ØB	L
	190.00	198.80	6.00

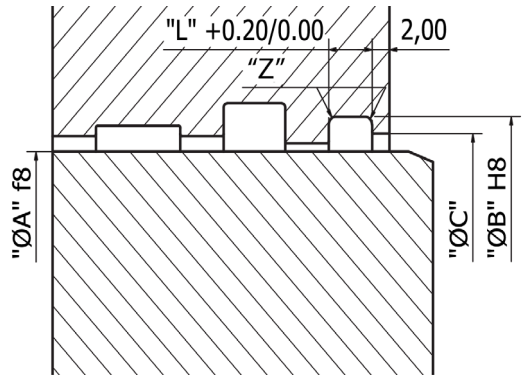

200.00

Part No	WDC 2000 2088 060		
Groove Dimension	ØA	ØB	L
	200.00	208.80	6.00

210.00

Part No	WDC 2100 2188 060		
Groove Dimension	ØA	ØB	L
	210.00	218.80	6.00

220.00

Part No	WDC 2200 2288 060		
Groove Dimension	ØA	ØB	L
	220.00	228.80	6.00

230.00

Part No	WDC 2300 2388 060		
Groove Dimension	ØA	ØB	L
	230.00	238.80	6.00

240.00

Part No	WDC 2400 2488 060		
Groove Dimension	ØA	ØB	L
	240.00	248.80	6.00

250.00

Part No	WDC 2500 2588 060		
Groove Dimension	ØA	ØB	L
	250.00	258.80	6.00

260.00

Part No	WDC 2600 2722 084		
Groove Dimension	ØA	ØB	L
	260.00	272.20	8.40

270.00

Part No	WDC 2700 2822 084		
Groove Dimension	ØA	ØB	L
	270.00	282.20	8.40

280.00

Part No	WDC 2800 2922 084		
Groove Dimension	ØA	ØB	L
	280.00	292.20	8.40

290.00

Part No	WDC 2900 3022 084		
Groove Dimension	ØA	ØB	L
	290.00	302.20	8.40

300.00

Part No	WDC 3000 3122 084		
Groove Dimension	ØA	ØB	L
	300.00	312.20	8.40

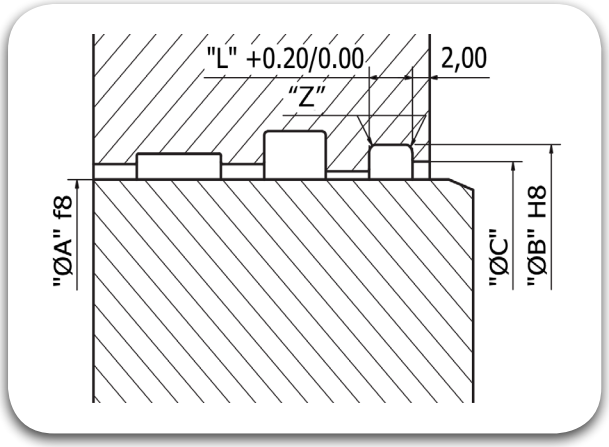

310.00

Part No	WDC 3100 3222 084					
Groove Dimension	ØA	x	ØB	x	L	
	310.00		322.20		8.40	

320.00

Part No	WDC 3200 3322 084					
Groove Dimension	ØA	x	ØB	x	L	
	320.00		332.20		8.40	

330.00

Part No	WDC 3300 3422 084					
Groove Dimension	ØA	x	ØB	x	L	
	330.00		342.20		8.40	

340.00

Part No	WDC 3400 3522 084					
Groove Dimension	ØA	x	ØB	x	L	
	340.00		352.20		8.40	

350.00

Part No	WDC 3500 3622 084					
Groove Dimension	ØA	x	ØB	x	L	
	350.00		362.20		8.40	

360.00

Part No	WDC 3600 3722 084					
Groove Dimension	ØA	x	ØB	x	L	
	360.00		372.20		8.40	

380.00

Part No	WDC 3800 3922 084					
Groove Dimension	ØA	x	ØB	x	L	
	380.00		392.20		8.40	

400.00

Part No	WDC 4000 4122 084					
Groove Dimension	ØA	x	ØB	x	L	
	400.00		412.20		8.40	

420.00

Part No	WDC 4200 4320 084					
Groove Dimension	ØA	x	ØB	x	L	
	420.00		432.20		8.40	

430.00

Part No	WDC 4300 4460 110					
Groove Dimension	ØA	x	ØB	x	L	
	430.00		446.00		11.00	

440.00

Part No	WDC 4400 4560 110					
Groove Dimension	ØA	x	ØB	x	L	
	440.00		456.00		11.00	

450.00

Part No	WDC 4500 4660 110					
Groove Dimension	ØA	x	ØB	x	L	
	450.00		466.00		11.00	

480.00

Part No	WDC 4800 4960 110					
Groove Dimension	ØA	x	ØB	x	L	
	480.00		496.00		11.00	

500.00

Part No	WDC 5000 5160 110					
Groove Dimension	ØA	x	ØB	x	L	
	500.00		516.00		11.00	

520.00

Part No	WDC 5200 5360 110					
Groove Dimension	ØA	x	ØB	x	L	
	520.00		536.00		11.00	

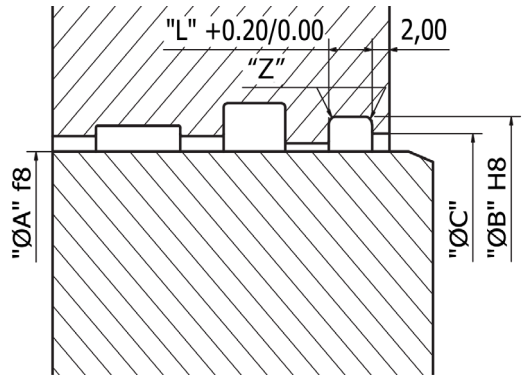

550.00

Part No	WDC 5500 5660 110					
Groove Dimension	ØA	x	ØB	x	L	
	550.00		566.00		11.00	

600.00

Part No	WDC 6000 6160 110					
Groove Dimension	ØA	x	ØB	x	L	
	600.00		616.00		11.00	

620.00

Part No	WDC 6200 6360 110					
Groove Dimension	ØA	x	ØB	x	L	
	620.00		636.00		11.00	

650.00

Part No	WDC 6500 6660 110					
Groove Dimension	ØA	x	ØB	x	L	
	650.00		666.00		11.00	

700.00

Part No	WDC 7000 7200 140					
Groove Dimension	ØA	x	ØB	x	L	
	700.00		720.00		14.00	

800.00

Part No	WDC 8000 8200 140					
Groove Dimension	ØA	x	ØB	x	L	
	800.00		820.00		14.00	

900.00

Part No	WDC 9000 9200 140					
Groove Dimension	ØA	x	ØB	x	L	
	900.00		920.00		14.00	

Wiper Seals

WDE

TRIADA
TECHNOLOGIES

#Sealing**Excellence**






Description

The WDE Scraper is a Double lip Wiper Seal, composed of two rings. The dynamic seal is a ring in TRIALON® (compounded PTFE) while the static seal is an O-Ring in TRIAFLEX®, also acting as an energizer. Depending on the application, media, cycle speed etc., the PTFE compound is selected and the O-Ring compound is selected considering the media compatibility, temperature etc. The lip at the outer edge avoids the dust particles entering into the system for axially moving rods, hence eliminates the damage to other seals and internal components. The inner lip retains the Hydraulic film within the system, thereby eliminating the leakage and also providing adequate lubrication for the sealing lips. Strongly suggested to use with Back Pumping sealing elements (TRITILT® Seals for example), that too when experiencing high temperatures, media compatibility issues, tricky surroundings or when there is a concern related to frictional losses from Sealing System. Similar to WDF type of Seals but with different Groove Dimensions.

Diameter Range	Ø8.00 – Ø2700.00
Standard material	TRIALON® T415 (Bronze Filled PTFE) with Energiser in TRIAFLEX® T571 (NBR) (Other Compounds available,so as to suit the Application Conditions).
Temperature(°C)	-40ºC to 200ºC (Based on Elastomer Material).
Speed	≤ 15.00 m/s
Fluids	Hydraulic fluids (Mineral Oil based), Water, Air etc, depending on Seal Compounds selected. Conditions).

Material Details

Seal Material	Seal Material Code	O-Ring Material	O-Ring Material / Code
TRIALON® Bronze Filled PTFE	T415	TRIAFLEX® NBR 70	N (T571)
TRIALON® Carbon Filled PTFE	T417	TRIAFLEX® FKM 75	F (T675)
		TRIAFLEX® EPDM 70	E (T771)
		TRIAFLEX® HNBR 70	H (T531)

Nomenclature

Part No	WDE	1000	1080	060	T415	N
	Seal profile	Bore Dia x 10	Groove Dia x 10	Groove Width x 10	Seal Material Code	O-Ring Material Code

Groove Details

Groove Width "L"	Mouth Diameter "ØC"	Mouth Width "E" Minimum	Radius "Z"
3.70mm	'ØA' + 1.50mm	2.00mm	0.40
5.00mm	'ØA' + 1.50mm	2.00mm	0.80
6.00mm	'ØA' + 1.50mm	3.00mm	1.00
8.40mm	'ØA' + 2.00mm	4.00mm	1.50
11.00mm	'ØA' + 2.00mm	4.00mm	1.50
14.00mm	'ØA' + 2.50mm	5.00mm	2.00

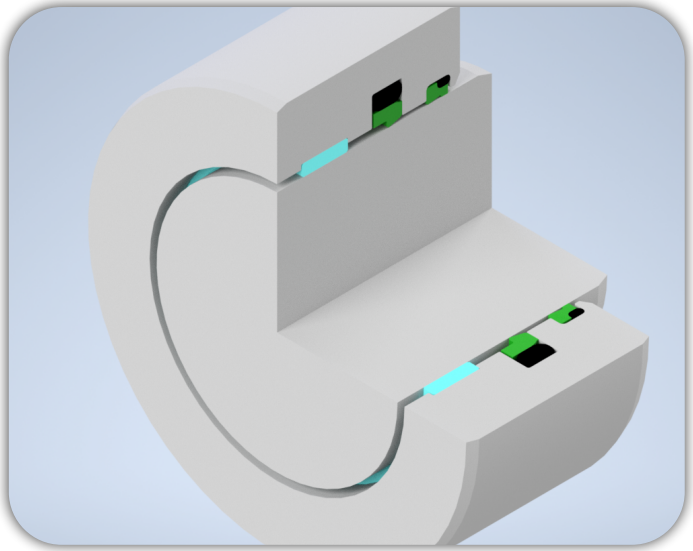

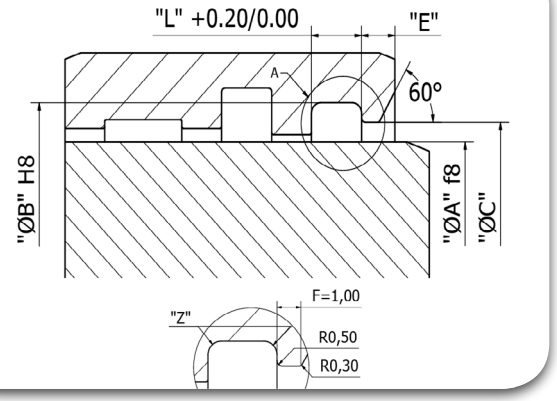

4.00

Part No	WDE 0040 0088 037					
Groove Dimension	ØA	x	ØB	x	L	
	4.00		8.80		3.70	

5.00

Part No	WDE 0050 0098 037					
Groove Dimension	ØA	x	ØB	x	L	
	5.00		9.80		3.70	

6.00

Part No	WDE 0060 0108 037					
Groove Dimension	ØA	x	ØB	x	L	
	6.00		10.80		3.70	

8.00

Part No	WDE 0080 0128 037					
Groove Dimension	ØA	x	ØB	x	L	
	8.00		12.80		3.70	

10.00

Part No	WDE 0100 0148 037					
Groove Dimension	ØA	x	ØB	x	L	
	10.00		14.80		3.70	

12.00

Part No	WDE 0120 0188 050					
Groove Dimension	ØA	x	ØB	x	L	
	12.00		18.80		5.00	

14.00

Part No	WDE 0140 0208 050					
Groove Dimension	ØA	x	ØB	x	L	
	14.00		20.80		5.00	

15.00

Part No	WDE 0150 0218 050					
Groove Dimension	ØA	x	ØB	x	L	
	15.00		21.80		5.00	

16.00

Part No	WDE 0016 0208 037					
Groove Dimension	ØA	x	ØB	x	L	
	16.00		20.80		3.70	

16.00

Part No	WDE 0016 0228 050					
Groove Dimension	ØA	x	ØB	x	L	
	16.00		22.80		5.00	

18.00

Part No	WDE 0018 0228 037					
Groove Dimension	ØA	x	ØB	x	L	
	18.00		22.80		3.70	

18.00

Part No	WDE 0018 0248 050					
Groove Dimension	ØA	x	ØB	x	L	
	18.00		24.80		5.00	

20.00

Part No	WDE 0200 0268 050					
Groove Dimension	ØA	x	ØB	x	L	
	20.00		26.80		5.00	

22.00

Part No	WDE 0220 0288 050					
Groove Dimension	ØA	x	ØB	x	L	
	22.00		28.80		5.00	

25.00

Part No	WDE 0250 0318 050					
Groove Dimension	ØA	x	ØB	x	L	
	25.00		31.80		5.00	

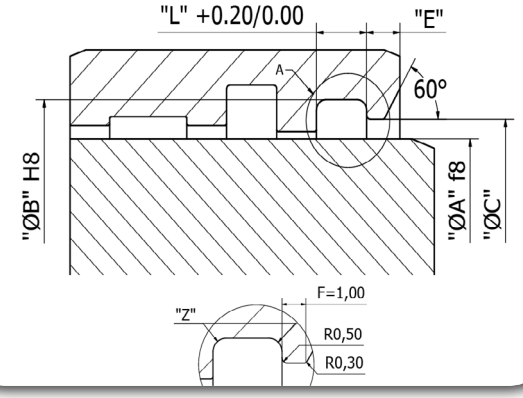

28.00

Part No	WDE 0280 0348 050					
Groove Dimension	ØA	x	ØB	x	L	
	28.00		34.80		5.00	

30.00

Part No	WDE 0300 0348 037					
Groove Dimension	ØA	x	ØB	x	L	
	30.00		34.80		3.70	

30.00

Part No	WDE 0300 0368 050					
Groove Dimension	ØA	x	ØB	x	L	
	30.00		36.80		5.00	

32.00

Part No	WDE 0320 0388 050					
Groove Dimension	ØA	x	ØB	x	L	
	32.00		38.80		5.00	

35.00

Part No	WDE 0350 0418 050					
Groove Dimension	ØA	x	ØB	x	L	
	35.00		41.80		5.00	

36.00

Part No	WDE 0360 0428 050					
Groove Dimension	ØA	x	ØB	x	L	
	36.00		42.80		5.00	

37.00

Part No	WDE 0370 0438 050					
Groove Dimension	ØA	x	ØB	x	L	
	37.00		43.80		5.00	

40.00

Part No	WDE 0400 0468 050					
Groove Dimension	ØA	x	ØB	x	L	
	40.00		46.80		5.00	

42.00

Part No	WDE 0420 0488 050					
Groove Dimension	ØA	x	ØB	x	L	
	42.00		48.80		5.00	

45.00

Part No	WDE 0450 0518 050					
Groove Dimension	ØA	x	ØB	x	L	
	45.00		51.80		5.00	

49.00

Part No	WDE 0490 0558 050					
Groove Dimension	ØA	x	ØB	x	L	
	49.00		55.80		5.00	

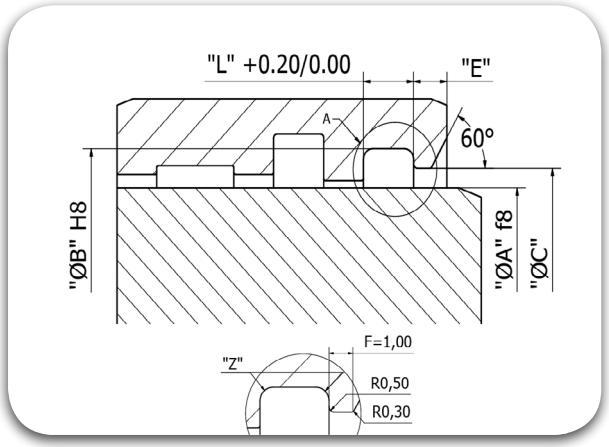

50.00

Part No	WDE 0500 0568 050					
Groove Dimension	ØA	x	ØB	x	L	
	50.00		56.80		5.00	

50.80

Part No	WDE 0508 0576 050					
Groove Dimension	ØA	x	ØB	x	L	
	50.80		57.60		5.00	

54.00

Part No	WDE 0540 0608 050					
Groove Dimension	ØA	x	ØB	x	L	
	54.00		60.80		5.00	

55.00

Part No	WDE 0550 0618 050					
Groove Dimension	ØA	x	ØB	x	L	
	55.00		61.80		5.00	

56.00

Part No	WDE 0560 0628 050					
Groove Dimension	ØA	x	ØB	x	L	
	56.00		62.80		5.00	

60.00

Part No	WDE 0600 0668 050					
Groove Dimension	ØA	x	ØB	x	L	
	60.00		66.80		5.00	

63.00

Part No	WDE 0630 0698 050					
Groove Dimension	ØA	x	ØB	x	L	
	63.00		69.80		5.00	

65.00

Part No	WDE 0650 0738 060					
Groove Dimension	ØA	x	ØB	x	L	
	65.00		73.80		6.00	

70.00

Part No	WDE 0700 0788 060					
Groove Dimension	ØA	x	ØB	x	L	
	70.00		78.80		6.00	

75.00

Part No	WDE 0750 0838 060					
Groove Dimension	ØA	x	ØB	x	L	
	75.00		83.80		6.00	

80.00

Part No	WDE 0800 0888 060					
Groove Dimension	ØA	x	ØB	x	L	
	80.00		88.80		6.00	

85.00

Part No	WDE 0850 0938 060					
Groove Dimension	ØA	x	ØB	x	L	
	85.00		93.80		6.00	

90.00

Part No	WDE 0900 0988 060					
Groove Dimension	ØA	x	ØB	x	L	
	90.00		98.80		6.00	

95.00

Part No	WDE 0950 1038 060					
Groove Dimension	ØA	x	ØB	x	L	
	95.00		103.80		6.00	

100.00

Part No	WDE 1000 1088 060					
Groove Dimension	ØA	x	ØB	x	L	
	100.00		108.80		6.00	

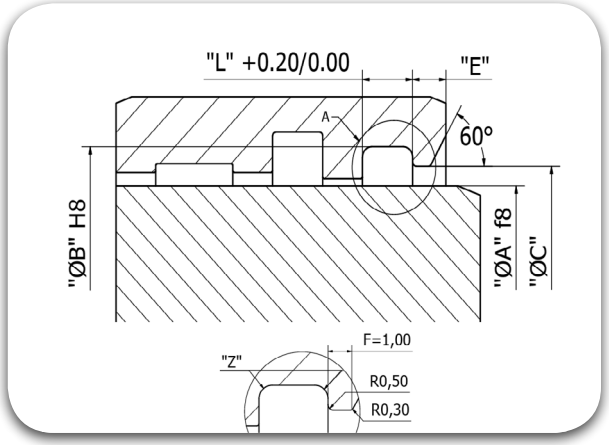

105.00

Part No	WDE 1050 1138 060					
Groove Dimension	ØA	x	ØB	x	L	
	105.00		113.80		6.00	

110.00

Part No	WDE 1100 1188 060					
Groove Dimension	ØA	x	ØB	x	L	
	110.00		118.80		6.00	

115.00

Part No	WDE 1150 1238 060					
Groove Dimension	ØA	x	ØB	x	L	
	115.00		123.80		6.00	

120.00

Part No	WDE 1200 1288 060					
Groove Dimension	ØA	x	ØB	x	L	
	120.00		128.80		6.00	

125.00

Part No	WDE 1250 1338 060					
Groove Dimension	ØA	x	ØB	x	L	
	125.00		133.80		6.00	

130.00

Part No	WDE 1300 1388 060					
Groove Dimension	ØA	x	ØB	x	L	
	130.00		138.80		6.00	

135.00

Part No	WDE 1350 1438 060					
Groove Dimension	ØA	x	ØB	x	L	
	135.00		143.80		6.00	

137.00

Part No	WDE 1370 1458 060					
Groove Dimension	ØA	x	ØB	x	L	
	137.00		145.80		6.00	

140.00

Part No	WDE 1400 1488 060					
Groove Dimension	ØA	x	ØB	x	L	
	140.00		148.80		6.00	

145.00

Part No	WDE 1450 1538 060					
Groove Dimension	ØA	x	ØB	x	L	
	145.00		153.80		6.00	

150.00

Part No	WDE 1500 1588 060					
Groove Dimension	ØA	x	ØB	x	L	
	150.00		158.80		6.00	

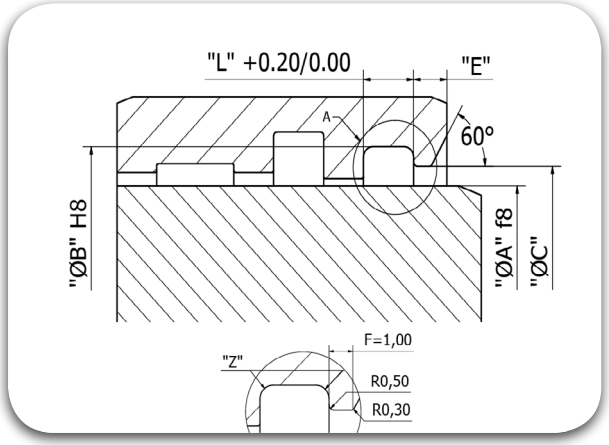

160.00

Part No	WDE 1600 1688 060					
Groove Dimension	ØA	x	ØB	x	L	
	160.00		168.80		6.00	

170.00

Part No	WDE 1700 1788 060					
Groove Dimension	ØA	x	ØB	x	L	
	170.00		178.80		6.00	

180.00

Part No	WDE 1800 1888 060					
Groove Dimension	ØA	x	ØB	x	L	
	180.00		188.80		6.00	

190.00

Part No	WDE 1900 1988 060					
Groove Dimension	ØA	x	ØB	x	L	
	190.00		198.80		6.00	

200.00

Part No	WDE 2000 2088 060					
Groove Dimension	ØA	x	ØB	x	L	
	200.00		208.80		6.00	

210.00

Part No	WDE 2100 2188 060					
Groove Dimension	ØA	x	ØB	x	L	
	210.00		218.80		6.00	

220.00

Part No	WDE 2200 2288 060					
Groove Dimension	ØA	x	ØB	x	L	
	220.00		228.80		6.00	

230.00

Part No	WDE 2300 2388 060					
Groove Dimension	ØA	x	ØB	x	L	
	230.00		238.80		6.00	

240.00

Part No	WDE 2400 2488 060					
Groove Dimension	ØA	x	ØB	x	L	
	240.00		248.80		6.00	

250.00

Part No	WDE 2500 2588 060					
Groove Dimension	ØA	x	ØB	x	L	
	250.00		258.80		6.00	

260.00

Part No	WDE 2600 2722 084					
Groove Dimension	ØA	x	ØB	x	L	
	260.00		272.20		8.40	

280.00

Part No	WDE 2800 2922 084					
Groove Dimension	ØA	x	ØB	x	L	
	280.00		292.20		8.40	

300.00

Part No	WDE 3000 3122 084					
Groove Dimension	ØA	x	ØB	x	L	
	300.00		312.20		8.40	

320.00

Part No	WDE 3200 3322 084					
Groove Dimension	ØA	x	ØB	x	L	
	320.00		332.20		8.40	

350.00

Part No	WDE 3500 3622 084					
Groove Dimension	ØA	x	ØB	x	L	
	350.00		362.20		8.40	

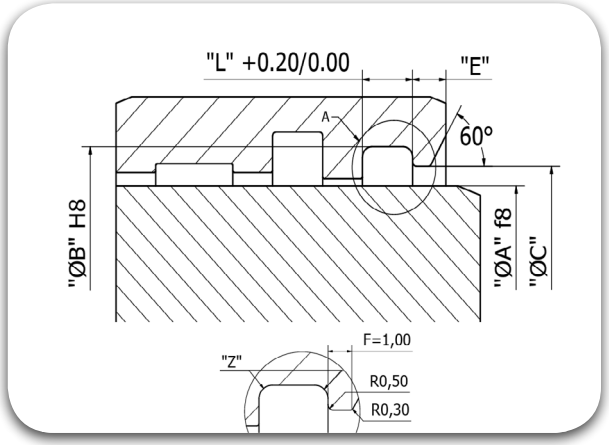

360.00

Part No	WDE 3600 3722 084					
Groove Dimension	ØA	x	ØB	x	L	
	360.00		372.20		8.40	

370.00

Part No	WDE 3700 3822 084					
Groove Dimension	ØA	x	ØB	x	L	
	370.00		382.20		8.40	

400.00

Part No	WDE 4000 4122 084					
Groove Dimension	ØA	x	ØB	x	L	
	400.00		412.20		8.40	

440.00

Part No	WDE 4400 4560 110					
Groove Dimension	ØA	x	ØB	x	L	
	440.00		456.00		11.00	

480.00

Part No	WDE 4800 4960 110					
Groove Dimension	ØA	x	ØB	x	L	
	480.00		496.00		11.00	

600.00

Part No	WDE 6000 6160 110					
Groove Dimension	ØA	x	ØB	x	L	
	600.00		616.00		11.00	

630.00

Part No	WDE 6300 6460 110					
Groove Dimension	ØA	x	ØB	x	L	
	630.00		646.00		11.00	

680.00

Part No	WDE 6800 7000 140					
Groove Dimension	ØA	x	ØB	x	L	
	680.00		700.00		14.00	

700.00

Part No	WDE 7000 7200 140					
Groove Dimension	ØA	x	ØB	x	L	
	700.00		720.00		14.00	

770.00

Part No	WDE 7700 7900 140					
Groove Dimension	ØA	x	ØB	x	L	
	770.00		790.00		14.00	

828.00

Part No	WDE 8280 8480 140					
Groove Dimension	ØA	x	ØB	x	L	
	828.00		848.00		14.00	

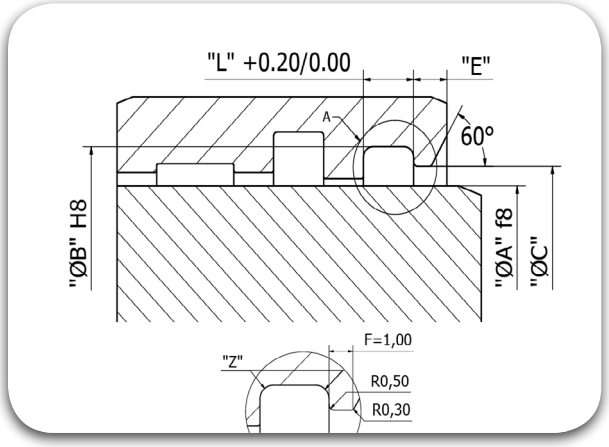

880.00

Part No	WDE 8800 9000 140					
Groove Dimension	ØA	x	ØB	x	L	
	880.00		900.00		14.00	

900.00

Part No	WDE 9000 9200 140					
Groove Dimension	ØA	x	ØB	x	L	
	900.00		920.00		14.00	

1030.00

Part No	WDEX1030 1050 014					
Groove Dimension	ØA	x	ØB	x	L	
	1030.00		1050.00		14.00	

1180.00

Part No	WDEX1180 1200 014					
Groove Dimension	ØA	x	ØB	x	L	
	1180.00		1200.00		14.00	

Wiper Seals

WDF

TRIADA
TECHNOLOGIES

#Sealing**Excellence**






Description

The WDF Scraper is a Double lip Wiper Seal, composed of two rings. The dynamic seal is a ring in TRIALON® (compounded PTFE) while the static seal is an O-Ring in TRIAFLEX®, also acting as an energizer. Depending on the application, media, cycle speed etc., the PTFE compound is selected and the O-Ring compound is selected considering the media compatibility, temperature etc.
The lip at the outer edge avoids the dust particles entering into the system for axially moving rods, hence eliminates the damage to other seals and internal components. The inner lip retains the Hydraulic film within the system, thereby eliminating the leakage and also providing adequate lubrication for the sealing lips. Strongly suggested to use with Back Pumping sealing elements (TRITILT® Seals for example), that too when experiencing high temperatures, media compatibility issues, tricky surroundings or when there is a concern related to frictional losses from Sealing System. Similar to WDE type of Seals but with different Groove Dimensions.

Diameter Range	Ø20.00 – Ø2700.00
Standard material	TRIALON® T415 (Bronze Filled PTFE) with Energiser in TRIAFLEX® T571 (NBR) (Other Compounds available,so as to suit the Application Conditions).
Temperature(°C)	-40ºC to 200ºC (Based on Elastomer Material).
Speed	≤ 15.00 m/s
Fluids	Hydraulic fluids (Mineral Oil based), Water, Air etc, depending on Seal Compounds selected. Conditions).

Material Details

Seal Material	Seal Material Code	O-Ring Material	O-Ring Material / Code
TRIALON® Bronze Filled PTFE	T415	TRIAFLEX® NBR 70	N (T571)
TRIALON® Carbon Filled PTFE	T417	TRIAFLEX® FKM 75	F (T675)
		TRIAFLEX® EPDM 70	E (T771)
		TRIAFLEX® HNBR 70	H (T531)

Nomenclature

Part No	WDF	1000	1080	060	T415	N
	Seal profile	Bore Dia x 10	Groove Dia x 10	Groove Width x 10	Seal Material Code	O-Ring Material Code

Groove Details

Groove Width "L"	Mouth Diameter "ØC"	Mouth Width "E" Minimum	Radius "Z"
4.20mm	'ØA' + 1.50mm	3.00mm	0.80
6.30mm	'ØA' + 1.50mm	3.00mm	1.00
8.10mm	'ØA' + 2.00mm	4.00mm	1.00
9.50mm	'ØA' + 2.50mm	5.00mm	1.50
14.00mm	'ØA' + 2.50mm	8.00mm	1.50
16.00mm	'ØA' + 2.50mm	10.00mm	2.00

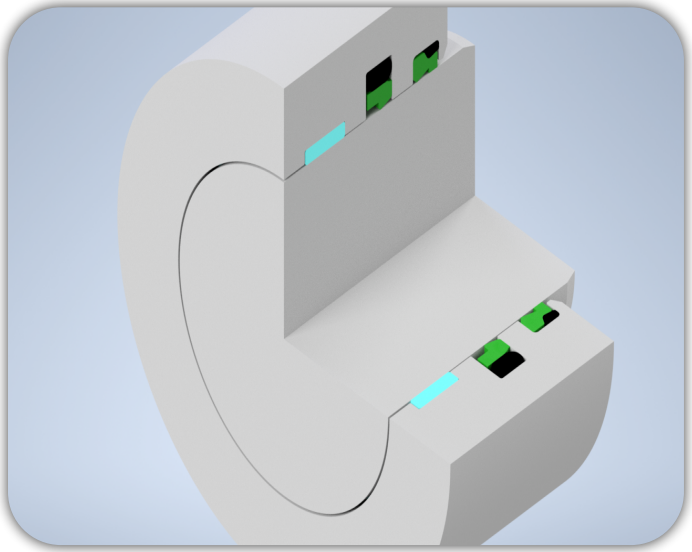

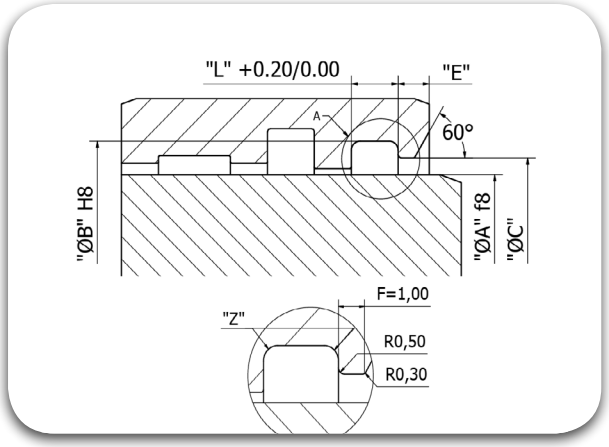

20.00

Part No	WDF 0200 0276 042					
Groove Dimension	ØA	x	ØB	x	L	
	20.00		27.60		4.20	

25.00

Part No	WDF 0250 0326 042					
Groove Dimension	ØA	x	ØB	x	L	
	25.00		32.60		4.20	

28.00

Part No	WDF 0280 0356 042					
Groove Dimension	ØA	x	ØB	x	L	
	28.00		35.60		4.20	

30.00

Part No	WDF 0300 0376 042					
Groove Dimension	ØA	x	ØB	x	L	
	30.00		37.60		4.20	

32.00

Part No	WDF 0320 0396 042					
Groove Dimension	ØA	x	ØB	x	L	
	32.00		39.60		4.20	

36.00

Part No	WDF 0360 0436 042					
Groove Dimension	ØA	x	ØB	x	L	
	36.00		43.60		4.20	

40.00

Part No	WDF 0400 0488 063					
Groove Dimension	ØA	x	ØB	x	L	
	40.00		48.80		6.30	

42.00

Part No	WDF 0420 0508 063					
Groove Dimension	ØA	x	ØB	x	L	
	42.00		50.80		6.30	

45.00

Part No	WDF 0450 0538 063					
Groove Dimension	ØA	x	ØB	x	L	
	45.00		53.80		6.30	

50.00

Part No	WDF 0500 0588 063					
Groove Dimension	ØA	x	ØB	x	L	
	50.00		58.80		6.30	

55.00

Part No	WDF 0550 0638 063					
Groove Dimension	ØA	x	ØB	x	L	
	55.00		63.80		6.30	

56.00

Part No	WDF 0560 0648 063					
Groove Dimension	ØA	x	ØB	x	L	
	56.00		64.80		6.30	

60.00

Part No	WDF 0600 0688 063					
Groove Dimension	ØA	x	ØB	x	L	
	60.00		68.80		6.30	

63.00

Part No	WDF 0630 0718 063					
Groove Dimension	ØA	x	ØB	x	L	
	63.00		71.80		6.30	

65.00

Part No	WDF 0650 0738 063					
Groove Dimension	ØA	x	ØB	x	L	
	65.00		73.80		6.30	

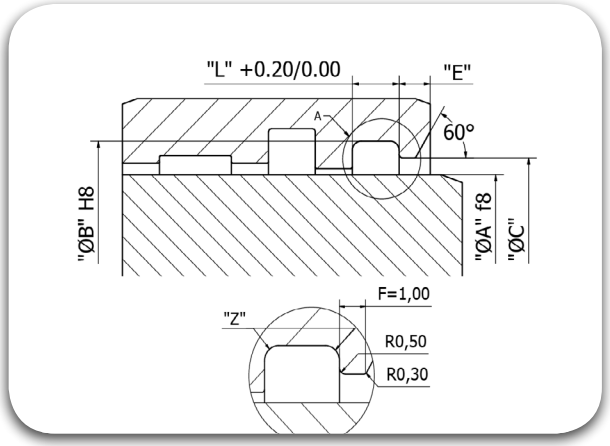

70.00

Part No	WDF 0700 0788 063					
Groove Dimension	ØA	x	ØB	x	L	
	70.00		78.80		6.30	

70.00

Part No	WDF 0700 0822 081					
Groove Dimension	ØA	x	ØB	x	L	
	70.00		82.20		8.10	

75.00

Part No	WDF 0750 0872 081					
Groove Dimension	ØA	x	ØB	x	L	
	75.00		87.20		8.10	

80.00

Part No	WDF 0800 0888 063					
Groove Dimension	ØA	x	ØB	x	L	
	80.00		88.80		6.30	

80.00

Part No	WDF 0800 0922 081					
Groove Dimension	ØA	x	ØB	x	L	
	80.00		92.20		8.10	

85.00

Part No	WDF 0850 0972 081					
Groove Dimension	ØA	x	ØB	x	L	
	85.00		97.20		8.10	

90.00

Part No	WDF 0900 0988 063					
Groove Dimension	ØA	x	ØB	x	L	
	90.00		98.80		6.30	

90.00

Part No	WDF 0900 1022 081					
Groove Dimension	ØA	x	ØB	x	L	
	90.00		102.20		8.10	

97.00

Part No	WDF 0970 1092 081					
Groove Dimension	ØA	x	ØB	x	L	
	97.00		109.20		8.10	

99.00

Part No	WDF 0990 1112 081					
Groove Dimension	ØA	x	ØB	x	L	
	99.00		111.20		8.10	

100.00

Part No	WDF 1000 1088 063					
Groove Dimension	ØA	x	ØB	x	L	
	100.00		108.80		6.30	

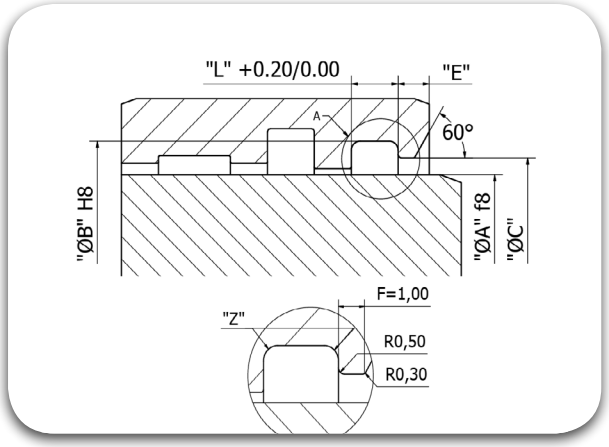

100.00

Part No	WDF 1000 1122 081					
Groove Dimension	ØA	x	ØB	x	L	
	100.00		112.20		8.10	

105.00

Part No	WDF 1050 1172 081					
Groove Dimension	ØA	x	ØB	x	L	
	105.00		117.20		8.10	

110.00

Part No	WDF 1100 1188 063					
Groove Dimension	ØA	x	ØB	x	L	
	110.00		118.80		6.30	

110.00

Part No	WDF 1100 1222 081					
Groove Dimension	ØA	x	ØB	x	L	
	110.00		122.20		8.10	

115.00

Part No	WDF 1115 1272 081					
Groove Dimension	ØA	x	ØB	x	L	
	115.00		127.20		8.10	

120.00

Part No	WDF 1200 1322 081					
Groove Dimension	ØA	x	ØB	x	L	
	120.00		132.20		8.10	

125.00

Part No	WDF 1250 1338 063					
Groove Dimension	ØA	x	ØB	x	L	
	125.00		133.80		6.30	

125.00

Part No	WDF 1250 1372 081					
Groove Dimension	ØA	x	ØB	x	L	
	125.00		137.20		8.10	

125.40

Part No	WDF 1254 1376 081					
Groove Dimension	ØA	x	ØB	x	L	
	125.40		137.60		8.10	

130.00

Part No	WDF 1300 1422 081					
Groove Dimension	ØA	x	ØB	x	L	
	130.00		142.20		8.10	

135.00

Part No	WDF 1350 1478 081					
Groove Dimension	ØA	x	ØB	x	L	
	135.00		147.80		8.10	

140.00

Part No	WDF 1400 1522 081					
Groove Dimension	ØA	x	ØB	x	L	
	140.00		152.20		8.10	

140.00

Part No	WDF 1400 1560 095					
Groove Dimension	ØA	x	ØB	x	L	
	140.00		156.00		9.50	

140.50

Part No	WDF 1405 1565 095		
Groove Dimension	ØA x ØB x L		
	140.50	156.50	9.50

150.00

Part No	WDF 1500 1660 095		
Groove Dimension	ØA x ØB x L		
	150.00	166.00	9.50

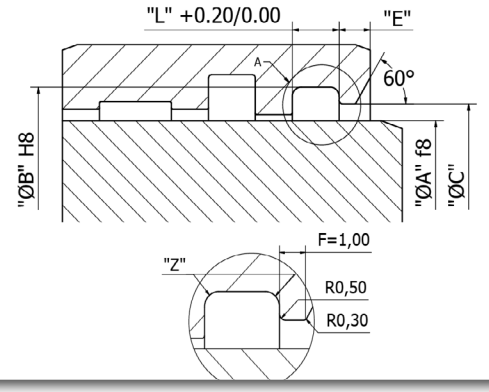

153.00

Part No	WDF 1530 1690 095		
Groove Dimension	ØA x ØB x L		
	153.00	169.00	9.50

155.00

Part No	WDF 1550 1710 095		
Groove Dimension	ØA x ØB x L		
	155.00	171.00	9.50

160.00

Part No	WDF 1600 1722 081		
Groove Dimension	ØA x ØB x L		
	160.00	172.20	8.10

160.00

Part No	WDF 1600 1760 095		
Groove Dimension	ØA x ØB x L		
	160.00	176.00	9.50

165.00

Part No	WDF 1650 1810 095		
Groove Dimension	ØA x ØB x L		
	165.00	181.00	9.50

170.00

Part No	WDF 1700 1860 095		
Groove Dimension	ØA x ØB x L		
	170.00	186.00	9.50

175.00

Part No	WDF 1750 1910 095		
Groove Dimension	ØA x ØB x L		
	175.00	191.00	9.50

180.00

Part No	WDF 1800 1922 081		
Groove Dimension	ØA x ØB x L		
	180.00	192.20	8.10

180.00

Part No	WDF 1800 1960 095		
Groove Dimension	ØA x ØB x L		
	180.00	196.00	9.50

188.20

Part No	WDF 1882 2042 095		
Groove Dimension	ØA x ØB x L		
	188.20	204.20	9.50

190.00

Part No	WDF 1900 2060 095		
Groove Dimension	ØA x ØB x L		
	190.00	206.00	9.50

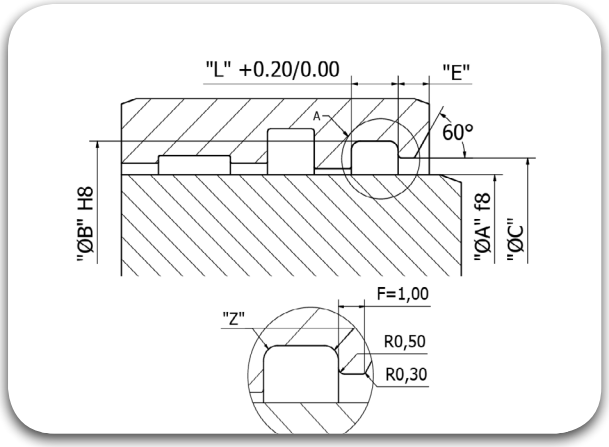

192.00

Part No	WDF 1920 2080 095					
Groove Dimension	ØA	x	ØB	x	L	
	192.00		208.00		9.50	

200.00

Part No	WDF 2000 2122 081					
Groove Dimension	ØA	x	ØB	x	L	
	200.00		212.20		8.10	

200.00

Part No	WDF 2000 2160 095					
Groove Dimension	ØA	x	ØB	x	L	
	200.00		216.00		9.50	

211.00

Part No	WDF 2110 2270 095					
Groove Dimension	ØA	x	ØB	x	L	
	211.00		227.00		9.50	

220.00

Part No	WDF 2200 2320 081					
Groove Dimension	ØA	x	ØB	x	L	
	220.00		232.20		8.10	

220.00

Part No	WDF 2200 2360 095					
Groove Dimension	ØA	x	ØB	x	L	
	220.00		236.00		9.50	

240.00

Part No	WDF 2400 2560 095					
Groove Dimension	ØA	x	ØB	x	L	
	240.00		256.00		9.50	

250.00

Part No	WDF 2500 2622 081					
Groove Dimension	ØA	x	ØB	x	L	
	250.00		262.20		8.10	

250.00

Part No	WDF 2500 2660 095					
Groove Dimension	ØA	x	ØB	x	L	
	250.00		266.00		9.50	

260.00

Part No	WDF 2600 2760 095					
Groove Dimension	ØA	x	ØB	x	L	
	260.00		276.00		9.50	

270.00

Part No	WDF 2700 2860 095					
Groove Dimension	ØA	x	ØB	x	L	
	270.00		286.00		9.50	

280.00

Part No	WDF 2800 2922 081					
Groove Dimension	ØA	x	ØB	x	L	
	280.00		292.20		8.10	

280.00

Part No	WDF 2800 2960 095					
Groove Dimension	ØA	x	ØB	x	L	
	280.00		296.00		9.50	

300.00

Part No	WDF 3000 3160 095					
Groove Dimension	ØA	x	ØB	x	L	
	300.00		316.00		9.50	

320.00

Part No	WDF 3200 3322 081					
Groove Dimension	ØA	x	ØB	x	L	
	320.00		332.20		8.10	

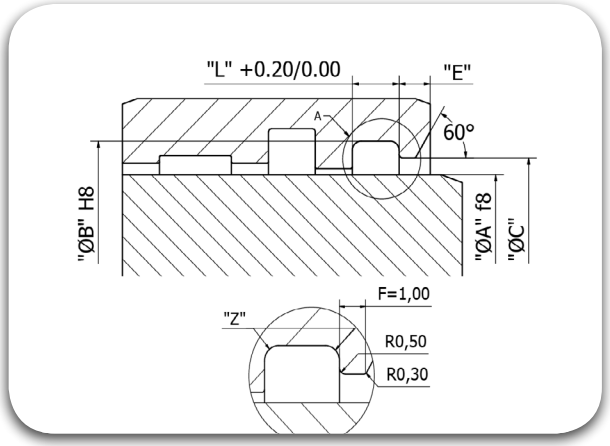

320.00

Part No	WDF 3200 3360 095					
Groove Dimension	ØA	x	ØB	x	L	
	320.00		336.00		9.50	

330.00

Part No	WDF 3300 3460 095					
Groove Dimension	ØA	x	ØB	x	L	
	330.00		346.00		9.50	

350.00

Part No	WDF 3500 3660 095					
Groove Dimension	ØA	x	ØB	x	L	
	350.00		366.00		9.50	

360.00

Part No	WDF 3600 3722 081					
Groove Dimension	ØA	x	ØB	x	L	
	360.00		372.20		8.10	

360.00

Part No	WDF 3600 3760 095					
Groove Dimension	ØA	x	ØB	x	L	
	360.00		376.00		9.50	

380.00

Part No	WDF 3800 3960 095					
Groove Dimension	ØA	x	ØB	x	L	
	380.00		396.00		9.50	

400.00

Part No	WDF 4000 4240 140					
Groove Dimension	ØA	x	ØB	x	L	
	400.00		424.00		14.00	

440.00

Part No	WDF 4400 4640 140					
Groove Dimension	ØA	x	ØB	x	L	
	440.00		464.00		14.00	

450.00

Part No	WDF 4500 4740 140					
Groove Dimension	ØA	x	ØB	x	L	
	450.00		474.00		14.00	

480.00

Part No	WDF 4800 5040 140					
Groove Dimension	ØA	x	ØB	x	L	
	480.00		504.00		14.00	

500.00

Part No	WDF 5000 5240 140					
Groove Dimension	ØA	x	ØB	x	L	
	500.00		524.00		14.00	

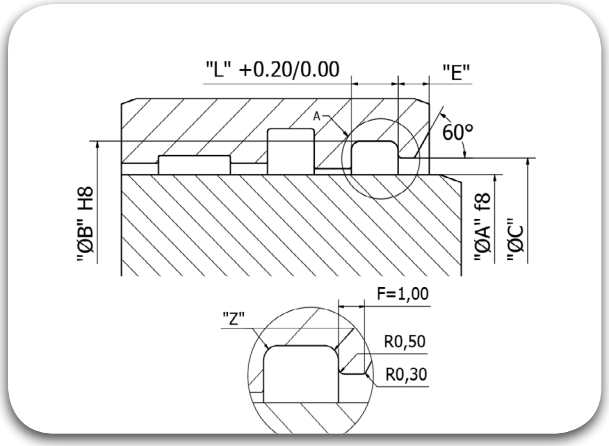

560.00

Part No	WDF 5600 5840 140					
Groove Dimension	ØA	x	ØB	x	L	
	560.00		584.00		14.00	

600.00

Part No	WDF 6000 6240 140					
Groove Dimension	ØA	x	ØB	x	L	
	600.00		624.00		14.00	

650.00

Part No	WDF 6500 6773 160					
Groove Dimension	ØA	x	ØB	x	L	
	650.00		677.30		16.00	

680.00

Part No	WDF 6800 7073 160					
Groove Dimension	ØA	x	ØB	x	L	
	680.00		707.30		16.00	

700.00

Part No	WDF 7000 7273 160					
Groove Dimension	ØA	x	ØB	x	L	
	700.00		727.30		16.00	

770.00

Part No	WDF 7700 7973 160					
Groove Dimension	ØA	x	ØB	x	L	
	770.00		797.30		16.00	

785.00

Part No	WDF 7850 8123 160					
Groove Dimension	ØA	x	ØB	x	L	
	785.00		812.30		16.00	

800.00

Part No	WDF 8000 8273 160					
Groove Dimension	ØA	x	ØB	x	L	
	800.00		827.30		16.00	

810.00

Part No	WDF 8100 8373 160					
Groove Dimension	ØA	x	ØB	x	L	
	810.00		837.30		16.00	

900.00

Part No	WDF 9000 9273 160					
Groove Dimension	ØA	x	ØB	x	L	
	900.00		927.30		16.00	

950.00

Part No	WDF 9500 9773 160					
Groove Dimension	ØA	x	ØB	x	L	
	950.00		977.30		16.00	

1000.00

Part No	WDFX1000 1027 016					
Groove Dimension	ØA	x	ØB	x	L	
	1000.00		1027.30		16.00	

1040.00

Part No	WDFX1040 1067 016					
Groove Dimension	ØA	x	ØB	x	L	
	1040.00		1067.30		16.00	

1130.00

Part No	WDFX1130 1157 016					
Groove Dimension	ØA	x	ØB	x	L	
	1130.00		1157.30		16.00	

1200.00

Part No	WDFX1200 1227 016					
Groove Dimension	ØA	x	ØB	x	L	
	1200.00		1227.30		16.00	

2600.00

Part No	WDFX2600 2627 016					
Groove Dimension	ØA	x	ØB	x	L	
	2600.00		2627.30		16.00	

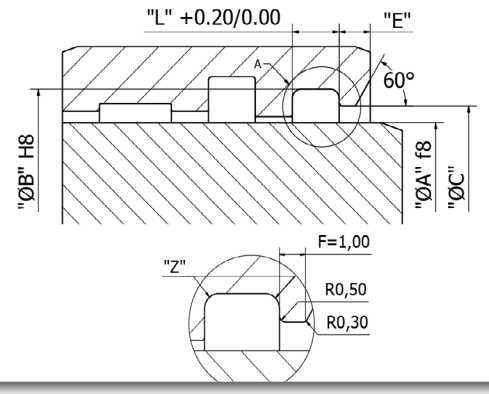

Wiper Seals

WDT

TRIADA
TECHNOLOGIES

#Sealing**Excellence**




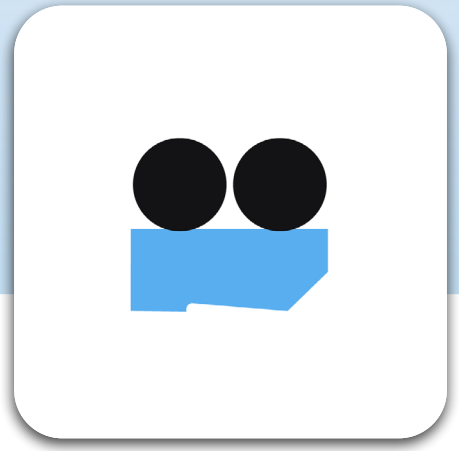

Description

The WDT Wiper is a Double Lip Wiper Seal, composing of two elements. The dynamic seal is a ring in TRIALON® (compounded PTFE) while the static sealing is by two O-Rings in TRIAFLEX®, also acting as an energizer. The presence of two O-Rings helps in balancing the Seal, particularly when the Wiper Seal is left to experience any spike pressures and also gives added grip on to the Rod surface. Assembling is bit easier compared to WDE & WDF type seals, due to the narrow cross section of the WDT type Seal.
Depending on the application, media, cycle speed etc., the PTFE compound is selected and the O-Ring compound is selected considering the media compatibility, temperature etc.
The lip at the outer edge avoids the dust particles entering into the system for axially moving rods, hence eliminates the damage for other seals and internal components.

Diameter Range	Ø4.00 – Ø2700.00
Standard material	TRIALON® T415 (Bronze Filled PTFE) with Energiser in TRIAFLEX® T571 (NBR) (Other Compounds available,so as to suit the Application Conditions).
Temperature(°C)	-40ºC to 200ºC (Based on Elastomer Material).
Speed	≤ 15.00 m/s
Fluids	Hydraulic fluids (Mineral Oil based).

Material Details

Seal Material	Seal Material Code	O-Ring Material	O-Ring Material / Code
TRIALON® Bronze Filled PTFE	T415	TRIAFLEX® NBR 70	N (T571)
TRIALON® Carbon Filled PTFE	T417	TRIAFLEX® FKM 75	F (T675)
		TRIAFLEX® EPDM 70	E (T771)
		TRIAFLEX® HNBR 70	H (T531)

Nomenclature

Part No	WDT	1000	1080	060	T415	N
	Seal profile	Bore Dia x 10	Groove Dia x 10	Groove Width x 10	Seal Material Code	O-Ring Material Code

Groove Details

Groove Width "L"	Mouth Diameter "ØC"	Mouth Width "E" Minimum	Radius "Z"
4.20mm	'ØA' + 1.00mm	8.20mm	0.40
6.30mm	'ØA' + 1.50mm	10.30mm	1.00
8.10mm	'ØA' + 2.00mm	12.10mm	1.20
11.50mm	'ØA' + 2.00mm	15.50mm	2.00
15.50mm	'ØA' + 2.50mm	19.50mm	2.50
18.00mm	'ØA' + 2.50mm	22.00mm	2.50

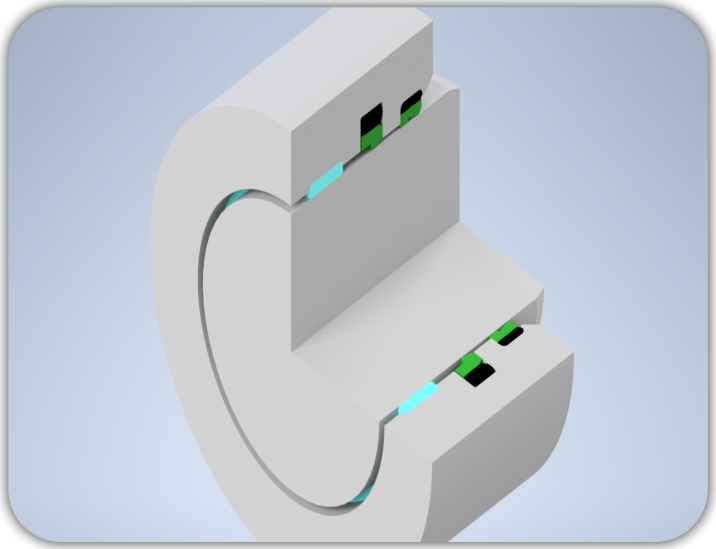

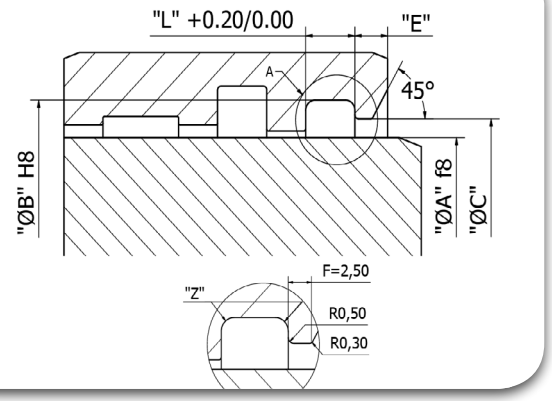

20.00

Part No	WDT 0200 0276 042					
Groove Dimension	ØA	x	ØB	x	L	
	20.00		27.60		4.20	

25.00

Part No	WDT 0250 0326 042					
Groove Dimension	ØA	x	ØB	x	L	
	25.00		32.60		4.20	

28.00

Part No	WDT 0280 0356 042					
Groove Dimension	ØA	x	ØB	x	L	
	28.00		35.60		4.20	

30.00

Part No	WDT 0300 0376 042					
Groove Dimension	ØA	x	ØB	x	L	
	30.00		37.60		4.20	

32.00

Part No	WDT 0320 0396 042					
Groove Dimension	ØA	x	ØB	x	L	
	32.00		39.60		4.20	

35.00

Part No	WDT 0350 0426 042					
Groove Dimension	ØA	x	ØB	x	L	
	35.00		42.60		4.20	

36.00

Part No	WDT 0360 0436 042					
Groove Dimension	ØA	x	ØB	x	L	
	36.00		43.60		4.20	

40.00

Part No	WDT 0400 0488 063					
Groove Dimension	ØA	x	ØB	x	L	
	40.00		48.80		6.30	

42.00

Part No	WDT 0420 0508 063					
Groove Dimension	ØA	x	ØB	x	L	
	42.00		50.80		6.30	

45.00

Part No	WDT 0450 0538 063					
Groove Dimension	ØA	x	ØB	x	L	
	45.00		53.80		6.30	

50.00

Part No	WDT 0500 0588 063					
Groove Dimension	ØA	x	ØB	x	L	
	50.00		58.80		6.30	

55.00

Part No	WDT 0550 0638 063					
Groove Dimension	ØA	x	ØB	x	L	
	55.00		63.80		6.30	

56.00

Part No	WDT 0560 0648 063					
Groove Dimension	ØA	x	ØB	x	L	
	56.00		64.80		6.30	

60.00

Part No	WDT 0600 0688 063					
Groove Dimension	ØA	x	ØB	x	L	
	60.00		68.80		6.30	

63.00

Part No	WDT 0630 0718 063					
Groove Dimension	ØA	x	ØB	x	L	
	63.00		71.80		6.30	

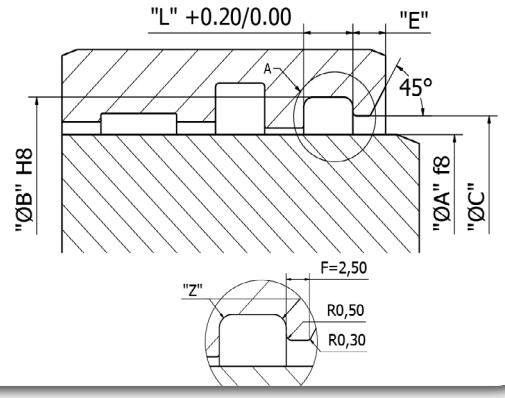

65.00

Part No	WDT 0650 0738 063					
Groove Dimension	ØA	x	ØB	x	L	
	65.00		73.80		6.30	

70.00

Part No	WDT 0700 0822 081					
Groove Dimension	ØA	x	ØB	x	L	
	70.00		82.20		8.10	

75.00

Part No	WDT 0750 0872 081					
Groove Dimension	ØA	x	ØB	x	L	
	75.00		87.20		8.10	

80.00

Part No	WDT 0800 0922 081					
Groove Dimension	ØA	x	ØB	x	L	
	80.00		92.20		8.10	

85.00

Part No	WDT 0850 0972 081					
Groove Dimension	ØA	x	ØB	x	L	
	85.00		97.20		8.10	

90.00

Part No	WDT 0900 1022 081					
Groove Dimension	ØA	x	ØB	x	L	
	90.00		102.20		8.10	

100.00

Part No	WDT 1000 1222 081					
Groove Dimension	ØA	x	ØB	x	L	
	100.00		112.20		8.10	

105.00

Part No	WDT 1050 1172 081					
Groove Dimension	ØA	x	ØB	x	L	
	105.00		117.20		8.10	

110.00

Part No	WDT 1100 1222 081					
Groove Dimension	ØA	x	ØB	x	L	
	110.00		122.20		8.10	

115.00

Part No	WDT 1150 1272 081					
Groove Dimension	ØA	x	ØB	x	L	
	115.00		127.20		8.10	

120.00

Part No	WDT 1200 1320 081					
Groove Dimension	ØA	x	ØB	x	L	
	120.00		132.20		8.10	

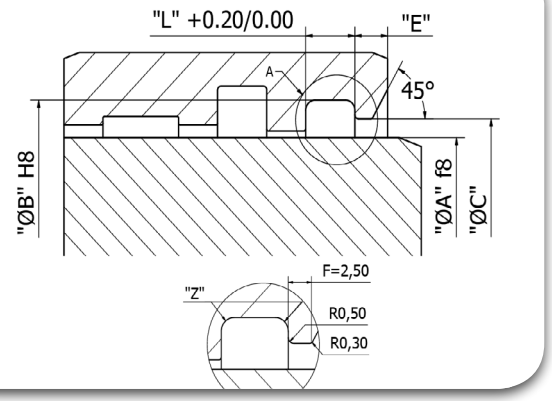

125.00

Part No	WDT 1250 1372 081				
Groove Dimension	ØA	x	ØB	x	L
	125.00		137.20		8.10

130.00

Part No	WDT 1300 1422 081				
Groove Dimension	ØA	x	ØB	x	L
	130.00		142.20		8.10

140.00

Part No	WDT 1400 1560 115				
Groove Dimension	ØA	x	ØB	x	L
	140.00		156.00		11.50

145.00

Part No	WDT 1450 1610 115				
Groove Dimension	ØA	x	ØB	x	L
	145.00		161.00		11.50

150.00

Part No	WDT 1500 1660 115				
Groove Dimension	ØA	x	ØB	x	L
	150.00		166.00		11.50

155.00

Part No	WDT 1550 1710 115				
Groove Dimension	ØA	x	ØB	x	L
	155.00		171.00		11.50

160.00

Part No	WDT 1600 1760 115				
Groove Dimension	ØA	x	ØB	x	L
	160.00		176.00		11.50

170.00

Part No	WDT 1700 1860 115				
Groove Dimension	ØA	x	ØB	x	L
	170.00		186.00		11.50

180.00

Part No	WDT 1800 1960 115				
Groove Dimension	ØA	x	ØB	x	L
	180.00		196.00		11.50

200.00

Part No	WDT 2000 2160 115				
Groove Dimension	ØA	x	ØB	x	L
	200.00		216.00		11.50

210.00

Part No	WDT 2100 2260 115				
Groove Dimension	ØA	x	ØB	x	L
	210.00		226.00		11.50

220.00

Part No	WDT 2200 2360 115				
Groove Dimension	ØA	x	ØB	x	L
	220.00		236.00		11.50

230.00

Part No	WDT 2300 2460 115				
Groove Dimension	ØA	x	ØB	x	L
	230.00		246.00		11.50

240.00

Part No	WDT 2400 2560 115					
Groove Dimension	ØA	x	ØB	x	L	
	240.00		256.00		11.50	

245.00

Part No	WDT 2450 2610 115					
Groove Dimension	ØA	x	ØB	x	L	
	245.00		261.00		11.50	

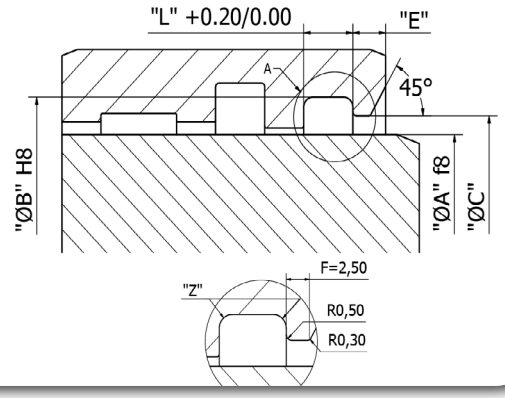

250.00

Part No	WDT 2500 2660 115					
Groove Dimension	ØA	x	ØB	x	L	
	250.00		266.00		11.50	

260.00

Part No	WDT 2600 2760 095					
Groove Dimension	ØA	x	ØB	x	L	
	260.00		276.00		9.50	

260.00

Part No	WDT 2600 2760 115					
Groove Dimension	ØA	x	ØB	x	L	
	260.00		276.00		11.50	

280.00

Part No	WDT 2800 2960 115					
Groove Dimension	ØA	x	ØB	x	L	
	280.00		296.00		11.50	

300.00

Part No	WDT 3000 3160 115					
Groove Dimension	ØA	x	ØB	x	L	
	300.00		316.00		11.50	

310.00

Part No	WDT 3100 3260 115					
Groove Dimension	ØA	x	ØB	x	L	
	310.00		326.00		11.50	

320.00

Part No	WDT 3200 3360 115					
Groove Dimension	ØA	x	ØB	x	L	
	320.00		336.00		11.50	

330.00

Part No	WDT 3300 3460 115					
Groove Dimension	ØA	x	ØB	x	L	
	330.00		346.00		11.50	

335.00

Part No	WDT 3350 3710 115					
Groove Dimension	ØA	x	ØB	x	L	
	335.00		371.00		11.50	

340.00

Part No	WDT 3400 3560 115					
Groove Dimension	ØA	x	ØB	x	L	
	340.00		356.00		11.50	

355.00

Part No	WDT 3550 3710 115					
Groove Dimension	ØA	x	ØB	x	L	
	355.00		371.00		11.50	

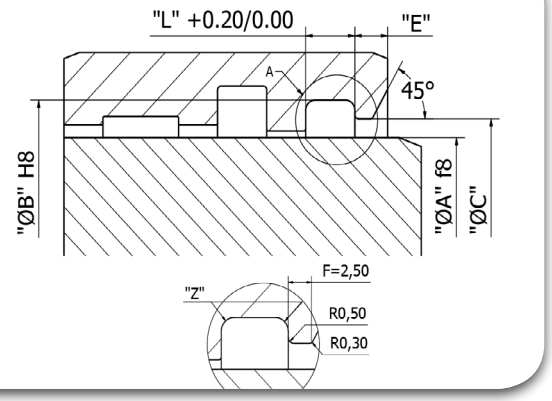

360.00

Part No	WDT 3600 3760 115					
Groove Dimension	ØA	x	ØB	x	L	
	360.00		376.00		11.50	

370.00

Part No	WDT 3700 3860 115					
Groove Dimension	ØA	x	ØB	x	L	
	370.00		386.00		11.50	

375.00

Part No	WDT 3750 3910 115					
Groove Dimension	ØA	x	ØB	x	L	
	375.00		391.00		11.50	

380.00

Part No	WDT 3800 3960 115					
Groove Dimension	ØA	x	ØB	x	L	
	380.00		396.00		11.50	

390.00

Part No	WDT 3900 4060 115					
Groove Dimension	ØA	x	ØB	x	L	
	390.00		406.00		11.50	

400.00

Part No	WDT 4000 4240 155					
Groove Dimension	ØA	x	ØB	x	L	
	400.00		424.00		15.50	

410.00

Part No	WDT 4100 4340 155					
Groove Dimension	ØA	x	ØB	x	L	
	410.00		434.00		15.50	

420.00

Part No	WDT 4200 4440 155					
Groove Dimension	ØA	x	ØB	x	L	
	420.00		444.00		15.50	

430.00

Part No	WDT 4300 4540 155					
Groove Dimension	ØA	x	ØB	x	L	
	430.00		454.00		15.50	

440.00

Part No	WDT 4400 4640 155					
Groove Dimension	ØA	x	ØB	x	L	
	440.00		464.00		15.50	

445.00

Part No	WDT 4450 4690 155					
Groove Dimension	ØA	x	ØB	x	L	
	445.00		469.00		15.50	

450.00

Part No	WDT 4500 4740 155					
Groove Dimension	ØA	x	ØB	x	L	
	450.00		474.00		15.50	

460.00

Part No	WDT 4600 4840 155					
Groove Dimension	ØA	x	ØB	x	L	
	460.00		484.00		15.50	

465.00

Part No	WDT 4650 4890 155		
Groove Dimension	ØA	ØB	L
	465.00	489.00	15.50

470.00

Part No	WDT 4700 4940 155		
Groove Dimension	ØA	ØB	L
	470.00	494.00	15.50

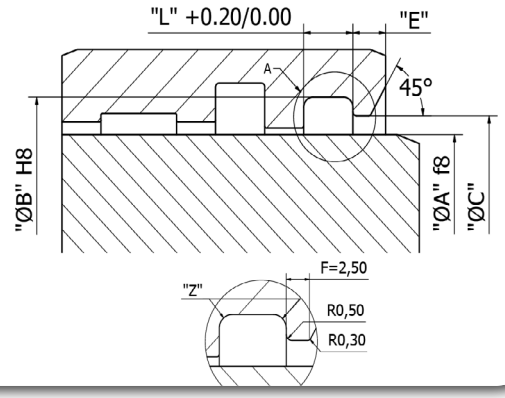

475.00

Part No	WDT 4750 4990 155		
Groove Dimension	ØA	ØB	L
	475.00	499.00	15.50

495.00

Part No	WDT 4950 5190 155		
Groove Dimension	ØA	ØB	L
	495.00	519.00	15.50

510.00

Part No	WDT 5100 5340 155		
Groove Dimension	ØA	ØB	L
	510.00	534.00	15.50

520.00

Part No	WDT 5200 5440 155		
Groove Dimension	ØA	ØB	L
	520.00	544.00	15.50

525.00

Part No	WDT 5250 5490 155		
Groove Dimension	ØA	ØB	L
	525.00	549.00	15.50

540.00

Part No	WDT 5400 5640 155		
Groove Dimension	ØA	ØB	L
	540.00	564.00	15.50

570.00

Part No	WDT 5700 5940 155		
Groove Dimension	ØA	ØB	L
	570.00	594.00	15.50

585.00

Part No	WDT 5850 6090 155		
Groove Dimension	ØA	ØB	L
	585.00	609.00	15.50

590.00

Part No	WDT 5900 6140 155		
Groove Dimension	ØA	ØB	L
	590.00	614.00	15.50

600.00

Part No	WDT 6000 6240 155		
Groove Dimension	ØA	ØB	L
	600.00	624.00	15.50

620.00

Part No	WDT 6200 6440 155		
Groove Dimension	ØA	ØB	L
	620.00	644.00	15.50

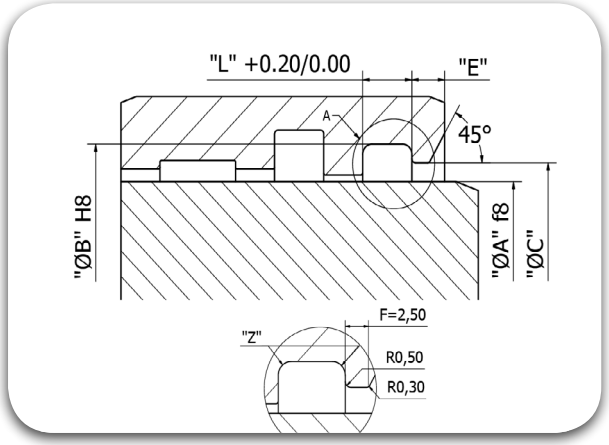

635.00

Part No	WDT 6350 6590 155				
Groove Dimension	ØA	x	ØB	x	L
	635.00		659.00		15.50

675.00

Part No	WDT 6750 7023 180				
Groove Dimension	ØA	x	ØB	x	L
	675.00		702.30		18.00

690.00

Part No	WDT 6900 7173 180				
Groove Dimension	ØA	x	ØB	x	L
	690.00		717.30		18.00

745.00

Part No	WDT 7450 7723 180				
Groove Dimension	ØA	x	ØB	x	L
	745.00		772.30		18.00

800.00

Part No	WDT 8000 8273 180				
Groove Dimension	ØA	x	ØB	x	L
	800.00		827.30		18.00

815.00

Part No	WDT 8150 8423 180				
Groove Dimension	ØA	x	ØB	x	L
	815.00		842.30		18.00

900.00

Part No	WDT 9000 9273 180				
Groove Dimension	ØA	x	ØB	x	L
	900.00		927.30		18.00

910.00

Part No	WDT 9100 9373 180				
Groove Dimension	ØA	x	ØB	x	L
	910.00		937.30		18.00

Wiper Seals

WVN

TRIADA
TECHNOLOGIES

#Sealing**Excellence**




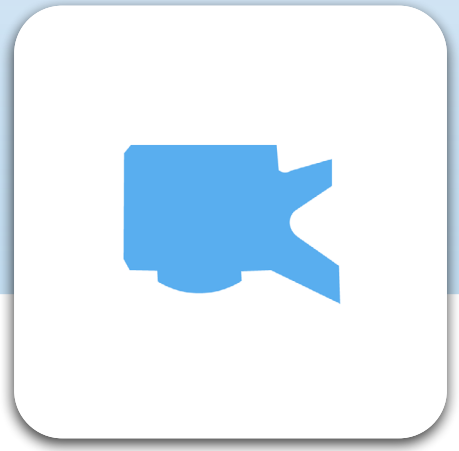

Description

The WVN wiper can be self-aligned in case of rod misalignment during operations, due to its special profile and design, WVN is a double lip Wiper in TRIATHANE® (Poly-Urethane) material, mostly suggested to be used in conjunction with a back pumping Primary Seal/Secondary Seal, like TRITILT® (RSS Style) Seal. The inner lip holds the film of oil within the system without being leaked out and the outer lip shall prevent any dust particles entering the system.

Diameter Range	Ø25.00 – Ø125.00 (Larger dia. on request)
Standard material	TRIATHANE® T479 (Poly-Urethane)
Temperature(°C)	- 35°C to 110°C
Speed	< 1.00 m/s
Fluids	Mineral Oils

Material Details

Seal Material	Seal Material / Code
TRIATHANE®	Poly-Urethane T479

Nomenclature

Part No	WVN	1200	1320	070	T479
	Seal profile	Rod Dia x 10	Groove Dia x 10	Groove Width x 10	Seal Material Code

Groove Details

Groove Width "L"	Mouth Diameter "ØC"	Width "E"
5.00mm	'ØA' + 5.50mm	7.00mm
5.50mm	'ØA' + 9.00mm	7.00mm
6.30mm	'ØA' + 7.00mm	8.30mm
9.50mm	'ØA' + 10.00mm	12.00mm

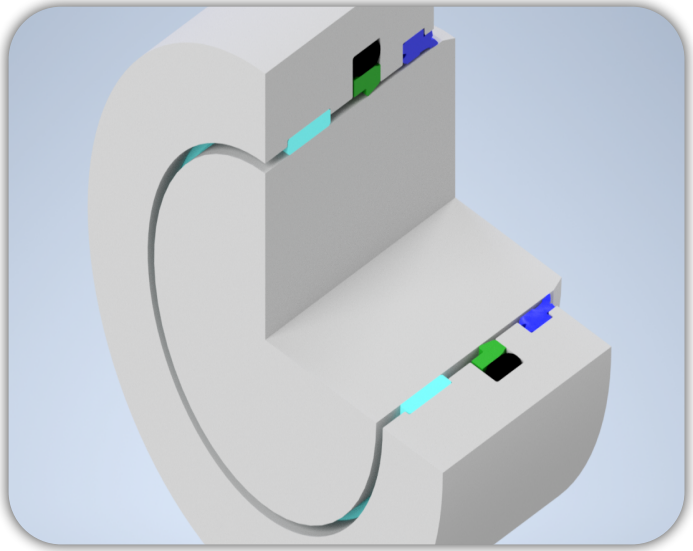

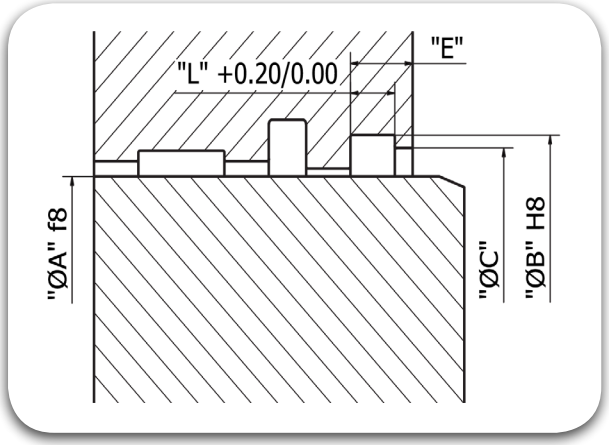

16.00

Part No	WVN 0160 0240 070				
Groove Dimension	ØA	x	ØB	x	L
	16.00		24.00		5.00

18.00

Part No	WVN 0180 0260 070				
Groove Dimension	ØA	x	ØB	x	L
	18.00		26.00		5.00

20.00

Part No	WVN 0200 0280 070				
Groove Dimension	ØA	x	ØB	x	L
	20.00		28.00		5.00

22.00

Part No	WVN 0220 0300 070				
Groove Dimension	ØA	x	ØB	x	L
	22.00		30.00		5.00

25.00

Part No	WVN 0250 0330 070				
Groove Dimension	ØA	x	ØB	x	L
	25.00		33.00		5.00

28.00

Part No	WVN 0280 0360 070				
Groove Dimension	ØA	x	ØB	x	L
	28.00		36.00		5.00

32.00

Part No	WVN 0320 0400 070				
Groove Dimension	ØA	x	ØB	x	L
	32.00		40.00		5.00

36.00

Part No	WVN 0360 0440 070				
Groove Dimension	ØA	x	ØB	x	L
	36.00		44.00		5.00

40.00

Part No	WVN 0400 0480 070				
Groove Dimension	ØA	x	ØB	x	L
	40.00		48.00		5.00

45.00

Part No	WVN 0450 0530 070				
Groove Dimension	ØA	x	ØB	x	L
	45.00		53.00		5.00

50.00

Part No	WVN 0500 0580 070				
Groove Dimension	ØA	x	ØB	x	L
	50.00		58.00		5.00

56.00

Part No	WVN 0560 0660 083				
Groove Dimension	ØA	x	ØB	x	L
	56.00		66.00		6.30

60.00

Part No	WVN 0600 0680 070				
Groove Dimension	ØA	x	ØB	x	L
	60.00		68.00		5.00

63.00

Part No	WVN 0630 0730 083					
Groove Dimension	ØA	x	ØB	x	L	
	63.00		73.00		6.30	

70.00

Part No	WVN 0700 0800 083					
Groove Dimension	ØA	x	ØB	x	L	
	70.00		80.00		6.30	

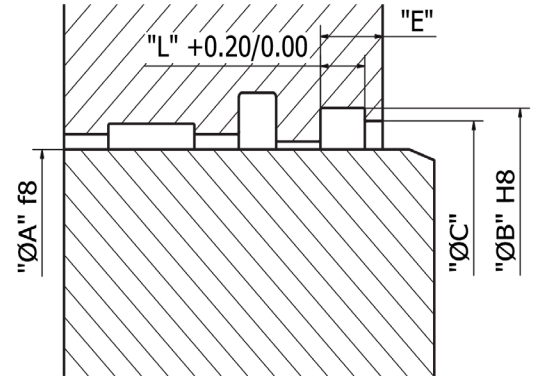

80.00

Part No	WVN 0800 0900 083					
Groove Dimension	ØA	x	ØB	x	L	
	80.00		90.00		6.30	

90.00

Part No	WVN 0900 1000 083					
Groove Dimension	ØA	x	ØB	x	L	
	90.00		100.00		6.30	

100.00

Part No	WVN 1000 1150 120					
Groove Dimension	ØA	x	ØB	x	L	
	100.00		115.00		9.50	

110.00

Part No	WVN 1100 1220 070					
Groove Dimension	ØA	x	ØB	x	L	
	110.00		122.00		5.50	

110.00

Part No	WVN 1100 1250 120					
Groove Dimension	ØA	x	ØB	x	L	
	110.00		125.00		9.50	

115.00

Part No	WVN 1150 1270 070					
Groove Dimension	ØA	x	ØB	x	L	
	115.00		127.00		5.50	

120.00

Part No	WVN 1200 1320 070					
Groove Dimension	ØA	x	ØB	x	L	
	120.00		132.00		5.50	

125.00

Part No	WVN 1250 1370 070					
Groove Dimension	ØA	x	ØB	x	L	
	125.00		137.00		5.50	

125.00

Part No	WVN 1250 1400 120					
Groove Dimension	ØA	x	ØB	x	L	
	125.00		140.00		9.50	

Wiper Seals

WSS

TRIADA
TECHNOLOGIES

#Sealing**Excellence**






Description

The WSS wiper is a double lip Wiper in TRIATHANE® (Poly-Urethane) material, the inner lip sits firmly on the rod, thanks to its special design, it holds the film of oil within the system without being leaked out and also prevents twisting or tilting of wiper inside the groove.

Diameter Range	Ø25.00 – Ø125.00 (Larger dia. on request)
Standard material	TRIATHANE® T479 (Poly-Urethane)
Temperature(°C)	- 35°C to 110°C
Speed	< 1.00 m/s
Fluids	Mineral Oils

Material Details

Seal Material	Seal Material / Code
TRIATHANE®	Poly-Urethane T479

Nomenclature

Part No	WSS	1200	1320	055	T479
	Seal profile	Rod Dia x 10	Groove Dia x 10	Groove Width x 10	Seal Material Code

Groove Details

Groove Width "L"	Mouth Diameter "ØC"	Width "E" Minimum
2.00mm	'ØA' + 3.00mm	1.00mm
2.60mm	'ØA' + 4.00mm	1.00mm
4.00mm	'ØA' + 6.00mm	1.00mm
5.50mm	'ØA' + 9.00mm	1.50mm

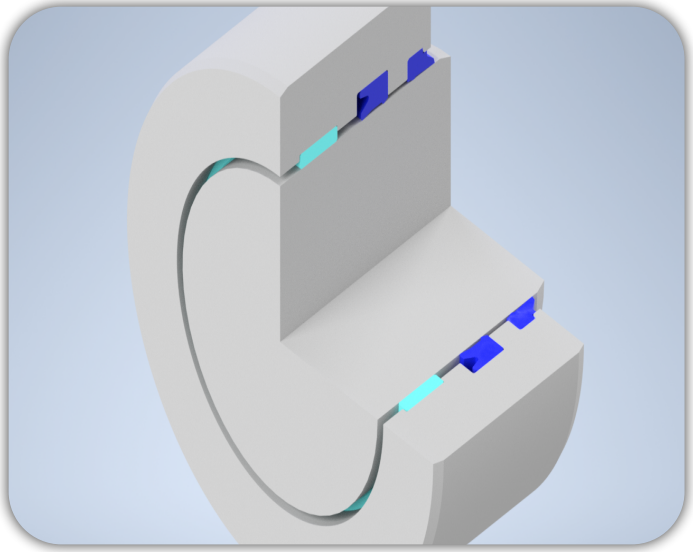

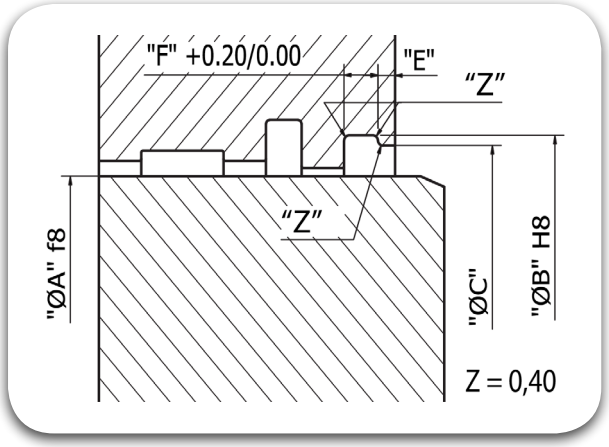

6.00

Part No	WSS 0060 0100 020				
Groove Dimension	ØA	x	ØB	x	F
	6.00		10.00		2.00

8.00

Part No	WSS 0080 0140 026				
Groove Dimension	ØA	x	ØB	x	F
	8.00		14.00		2.60

10.00

Part No	WSS 0100 0160 026				
Groove Dimension	ØA	x	ØB	x	F
	10.00		16.00		2.60

10.00

Part No	WSS 0100 0180 040				
Groove Dimension	ØA	x	ØB	x	F
	10.00		18.00		4.00

12.00

Part No	WSS 0120 0180 026				
Groove Dimension	ØA	x	ØB	x	F
	12.00		18.00		2.60

12.00

Part No	WSS 0120 0200 040				
Groove Dimension	ØA	x	ØB	x	F
	12.00		20.00		4.00

14.00

Part No	WSS 0140 0200 026				
Groove Dimension	ØA	x	ØB	x	F
	14.00		20.00		2.60

14.00

Part No	WSS 0140 0220 040				
Groove Dimension	ØA	x	ØB	x	F
	14.00		22.00		4.00

15.00

Part No	WSS 0150 0230 040				
Groove Dimension	ØA	x	ØB	x	F
	15.00		23.00		4.00

16.00

Part No	WSS 0160 0240 040				
Groove Dimension	ØA	x	ØB	x	F
	16.00		24.00		4.00

18.00

Part No	WSS 0180 0260 040				
Groove Dimension	ØA	x	ØB	x	F
	18.00		26.00		4.00

20.00

Part No	WSS 0200 0260 026				
Groove Dimension	ØA	x	ØB	x	F
	20.00		26.00		2.60

20.00

Part No	WSS 0200 0280 040				
Groove Dimension	ØA	x	ØB	x	F
	20.00		28.00		4.00

22.00

Part No	WSS 0220 0300 040					
Groove Dimension	ØA	x	ØB	x	F	
	22.00		30.00		4.00	

24.00

Part No	WSS 0240 0320 040					
Groove Dimension	ØA	x	ØB	x	F	
	24.00		32.00		4.00	

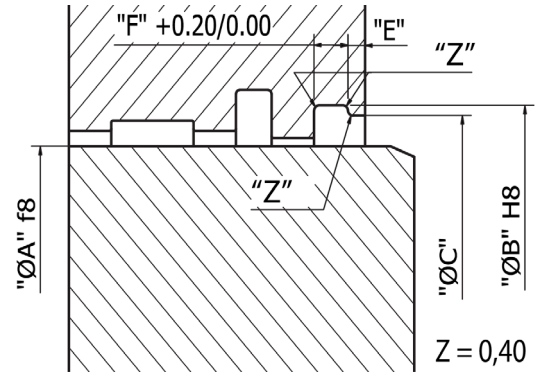

25.00

Part No	WSS 0250 0310 026					
Groove Dimension	ØA	x	ØB	x	F	
	25.00		31.00		2.60	

25.00

Part No	WSS 0250 0330 040					
Groove Dimension	ØA	x	ØB	x	F	
	25.00		33.00		4.00	

28.00

Part No	WSS 0280 0360 040					
Groove Dimension	ØA	x	ØB	x	F	
	28.00		36.00		4.00	

30.00

Part No	WSS 0300 0360 026					
Groove Dimension	ØA	x	ØB	x	F	
	30.00		36.00		2.60	

30.00

Part No	WSS 0300 0380 040					
Groove Dimension	ØA	x	ØB	x	F	
	30.00		38.00		4.00	

32.00

Part No	WSS 0320 0400 040					
Groove Dimension	ØA	x	ØB	x	F	
	32.00		40.00		4.00	

34.00

Part No	WSS 0340 0420 040					
Groove Dimension	ØA	x	ØB	x	F	
	34.00		42.00		4.00	

35.00

Part No	WSS 0350 0430 040					
Groove Dimension	ØA	x	ØB	x	F	
	35.00		43.00		4.00	

36.00

Part No	WSS 0360 0440 040					
Groove Dimension	ØA	x	ØB	x	F	
	36.00		44.00		4.00	

38.00

Part No	WSS 0380 0460 040					
Groove Dimension	ØA	x	ØB	x	F	
	38.00		46.00		4.00	

40.00

Part No	WSS 0400 0480 040					
Groove Dimension	ØA	x	ØB	x	F	
	40.00		48.00		4.00	

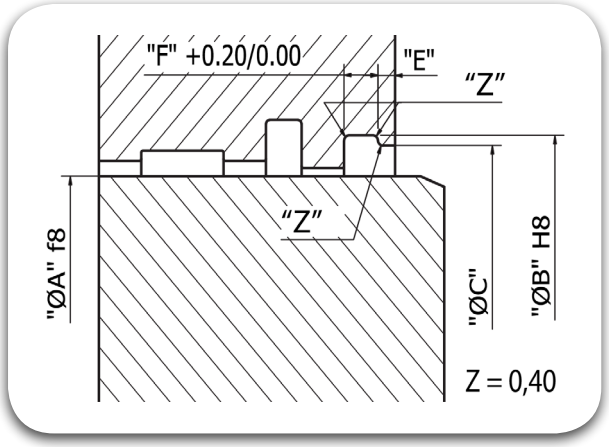

42.00

Part No	WSS 0420 0500 040				
Groove Dimension	ØA	x	ØB	x	F
	42.00		50.00		4.00

45.00

Part No	WSS 0450 0530 040				
Groove Dimension	ØA	x	ØB	x	F
	45.00		53.00		4.00

50.00

Part No	WSS 0500 0580 040				
Groove Dimension	ØA	x	ØB	x	F
	50.00		58.00		4.00

52.00

Part No	WSS 0520 0600 040				
Groove Dimension	ØA	x	ØB	x	F
	52.00		60.00		4.00

55.00

Part No	WSS 0550 0630 040				
Groove Dimension	ØA	x	ØB	x	F
	55.00		63.00		4.00

56.00

Part No	WSS 0560 0640 040				
Groove Dimension	ØA	x	ØB	x	F
	56.00		64.00		4.00

60.00

Part No	WSS 0600 0680 040				
Groove Dimension	ØA	x	ØB	x	F
	60.00		68.00		4.00

63.00

Part No	WSS 0630 0710 040				
Groove Dimension	ØA	x	ØB	x	F
	63.00		71.00		4.00

65.00

Part No	WSS 0650 0730 040				
Groove Dimension	ØA	x	ØB	x	F
	65.00		73.00		4.00

70.00

Part No	WSS 0700 0780 040				
Groove Dimension	ØA	x	ØB	x	F
	70.00		78.00		4.00

75.00

Part No	WSS 0750 0830 040				
Groove Dimension	ØA	x	ØB	x	F
	75.00		83.00		4.00

80.00

Part No	WSS 0800 0880 040				
Groove Dimension	ØA	x	ØB	x	F
	80.00		88.00		4.00

85.00

Part No	WSS 0850 0930 040				
Groove Dimension	ØA	x	ØB	x	F
	85.00		93.00		4.00

90.00

Part No	WSS 0900 0980 040
Groove Dimension	ØA 90.00 x ØB 98.00 x F 4.00

100.00

Part No	WSS 1000 1080 040
Groove Dimension	ØA 100.00 x ØB 108.00 x F 4.00

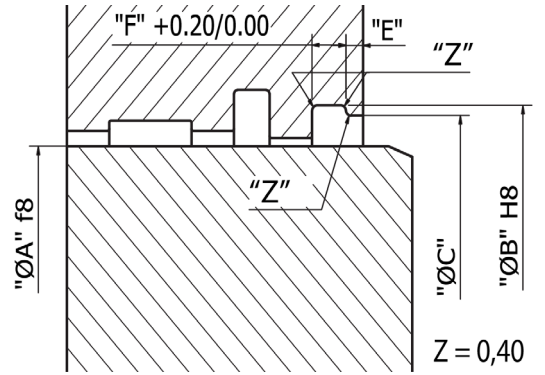

110.00

Part No	WSS 1100 1220 055
Groove Dimension	ØA 110.00 x ØB 122.00 x F 5.50

120.00

Part No	WSS 1200 1320 055
Groove Dimension	ØA 120.00 x ØB 132.00 x F 5.50

125.00

Part No	WSS 1250 1370 055
Groove Dimension	ØA 125.00 x ØB 137.00 x F 5.50

140.00

Part No	WSS 1400 1520 055
Groove Dimension	ØA 140.00 x ØB 152.00 x F 5.50

150.00

Part No	WSS 1500 1620 055
Groove Dimension	ØA 150.00 x ØB 162.00 x F 5.50

160.00

Part No	WSS 1600 1720 055
Groove Dimension	ØA 160.00 x ØB 172.00 x F 5.50

180.00

Part No	WSS 1800 1920 055
Groove Dimension	ØA 180.00 x ØB 192.00 x F 5.50

TRIADA
TECHNOLOGIES

Static Seals
Triada Sealing Guide

#SealingExcellence

TRIADA

Important Information

Utmost care has been taken in the preparation and completion of this guide, but still it is not guaranteed that this is devoid of any typographical or inadvertent errors or omissions. Hence, Triada shall not be responsible for the end user's reliance on such errors or omissions. Information or data in this guide which includes and not limited to product profiles, product features, specifications etc. may be amended or modified at the sole discretion of Triada Technologies India Pvt. Ltd. (TTIPL) without any notice or prior intimation.

TTIPL strongly urge its customers and associates to validate the products that are being offered, to ensure its suitability and performance, based on their applications, hardware & operating conditions, through their own analysis and testing.

DOC. NO.: TT/AE/CAT/FE/03-2023

Table of Content

1 Introduction to Static Seals

01 KSQ D01 - D11

02 LA1 D13 - D19

03 QUA D21 - D32

04 OME D33 - D94

05 MAE D95 - D98

06 BU Rings D99 - D110

07 Bonded Seals D111 - D124

08 PUO & RUO D125 - D128

Introduction to Static Seals

Static Seals

Static Seals as the name suggests, is more commonly used for static applications, which is also is critical for the successful sealing of a hydraulic or pneumatic system. Some of the seals from this group like O-Ring, Lobe Seal etc., used to be used as Dynamic Seals (or rather still being used), which were then over a period of time, replaced by seals manufactured from newer materials like PTFE, PA etc., due to its superior characteristics in dynamic applications.

Even though O-Ring is one of the most widely used element as the Static Seal, there are other Seals also like Lobe Seals, Bonded Seals, Dual Seals, Back-Up Rings, Flat Gaskets, Square Seals etc. which are also elements falling in the same group. Of course, there are then a variety of different designs by several manufacturers, which had been designed and develop to meet various specific requirements.

Triada® has a wide range of O-Rings meeting to various standards like AS568, DIN, ISO etc. and also in various compounds. We do supply these O-Rings in different colors, as specified by the Customer, subject to certain terms and conditions. Similar is the case with any other elastomer seals too. Back-Up Rings are available in various cross-section profiles or it could be in a cut or uncut style or even in a spiral form. These are also available in concave profile, which mostly comes in NBR compound.

Selection of the right static seal is important, as one need to ensure that these do not become the weakest link in the entire sealing system. So, equal importance is to be given in selection of these seals as being given to the selection of Piston or Rod Seals. Triada® can support the Customers to select the right sealing elements for the entire application, thereby delivering a leak proof system or a system as per the requirements of their Customers.

Static Seals

KSQ

TRIADA
TECHNOLOGIES

#Sealing**Excellence**

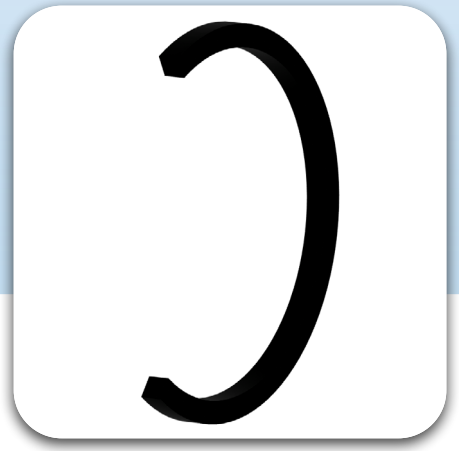
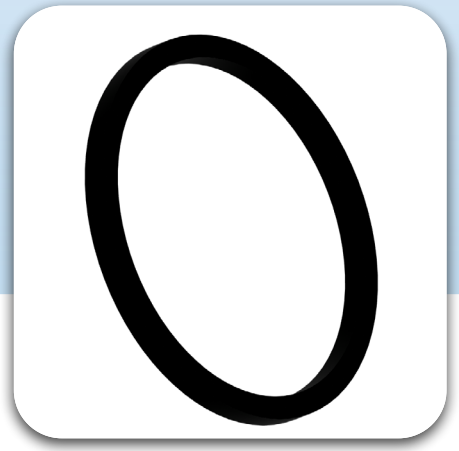
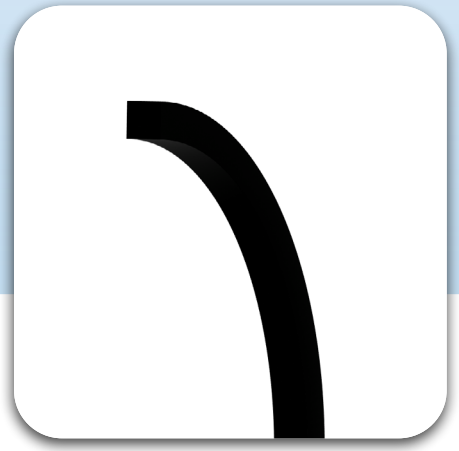
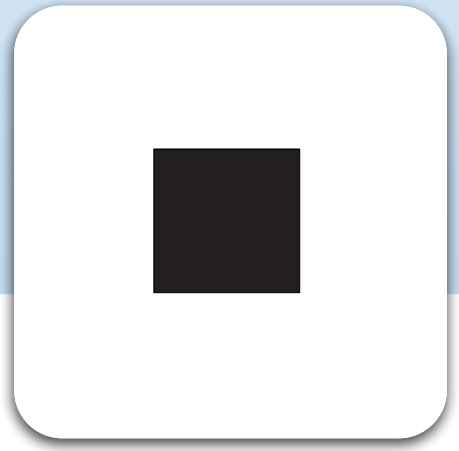

Description

As the name says Square Ring is an endless ring with a square cross section. A Square Ring is defined by its inside diameter (ID) and Cross section (T) and used as a Dynamic or Static Seal, usually installed in a rectangular machined groove.

Diameter Range	Ø7.00 – Ø466.00
Standard material	TRIAFLEX® T571(NBR70)
Temperature(°C)	-40° C to 200° C (Based on Elastomer Material).
Fluids	Hydraulic fluids (Mineral Oil based), Water, Air etc, depending on Seal Compounds selected. Conditions).
Pressure	<500 bar (Please consult Triada Technologies for applications above 500bar)

Material Details

Square Ring Material	Material Code
NBR 70	T571
NBR 90	T591
FKM 70	T675
FKM 90	T691
EPDM 70	T771
HNBR 70	T532

Cross Section "W"	Tolerance ±	Cross Section "T"	Tolerance ±
1.68	0.15	1.68	0.08
2.51	0.15	2.51	0.10
3.40	0.15	3.40	0.10
5.16	0.15	5.16	0.10
6.73	0.15	6.73	0.10

Nomenclature

Part No	KSQ	00106	0125	T571
	Seal profile	Square Ring ID x 100	Cross Section x 100	Seal Material Code

Inside Diameter I.D (mm)	Tolerance (mm) ±
4.00 - 14.00	0.13
14.01 - 15.60	0.18
15.61 - 25.12	0.23
25.13 - 29.78	0.25
29.79 - 34.65	0.28
34.66 - 44.17	0.33
44.18 - 50.52	0.38
50.53 - 66.40	0.46
66.41 - 75.92	0.51
75.93 - 94.97	0.61
94.98 - 107.67	0.69

Inside Diameter I.D (mm)	Tolerance (mm) ±
107.68 - 126.72	0.76
126.73 - 133.07	0.94
133.08 - 158.42	0.89
158.43 - 183.42	1.02
183.43 - 209.22	1.14
209.23 - 234.62	1.27
234.63 - 278.99	1.40
279.00 - 405.26	1.65
405.27 - 430.66	1.91
430.67 - 456.07	2.03

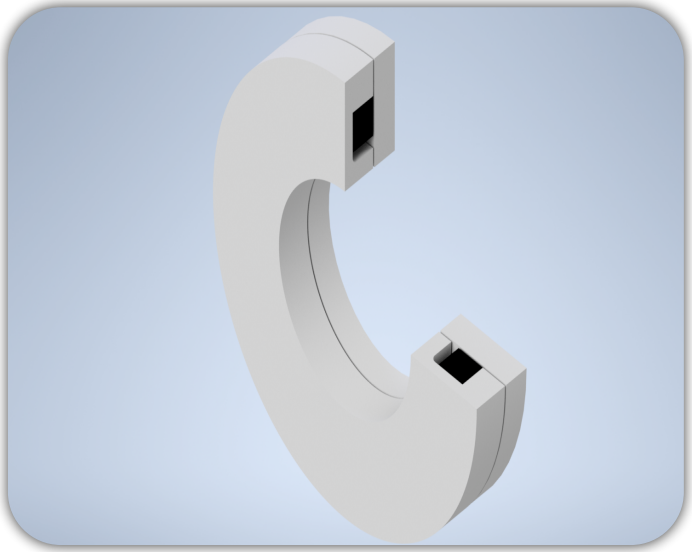

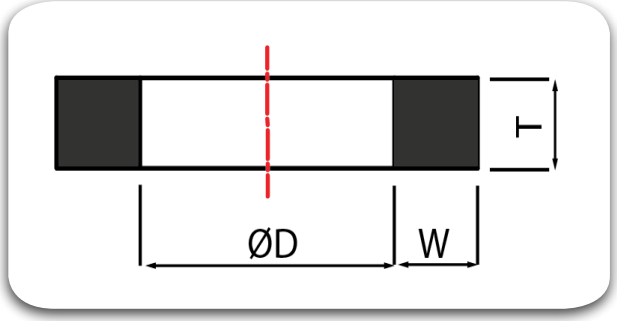

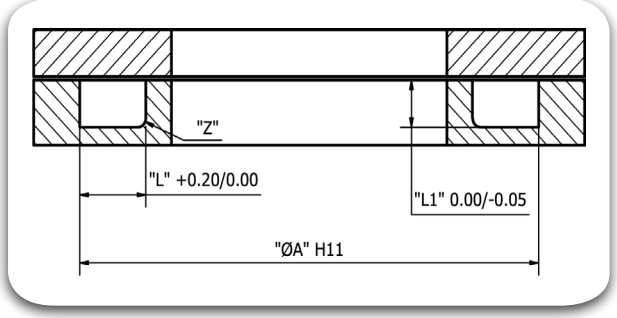

Sl. No.	TRIADA® Part Numbers	Groove Dimensions			Groove Bottom Radius "Z"	Ring Dimensions		
		"ØA" H11	"L" +0.2	"L1" -0.05		"ØD"	W	T
1	KSQ00447 0168 T591	7.92	2.40	1.45	0.40	4.47	**1.68**	**1.68**
2	KSQ00528 0168 T591	8.71	2.40	1.45	0.40	5.28	1.68	1.68
3	KSQ00607 0168 T591	9.53	2.40	1.45	0.40	6.07	**1.68**	**1.68**
4	KSQ00765 0168 T591	11.10	2.40	1.45	0.40	7.65	1.68	1.68
5	KSQ00925 0168 T591	12.70	2.40	1.45	0.40	9.25	**1.68**	**1.68**
6	KSQ01082 0168 T591	14.27	2.40	1.45	0.40	10.82	1.68	1.68
7	KSQ01242 0168 T591	15.88	2.40	1.45	0.40	12.42	**1.68**	**1.68**
8	KSQ01400 0168 T591	17.45	2.40	1.45	0.40	14.00	1.68	1.68
9	KSQ01560 0168 T591	19.05	2.40	1.45	0.40	15.60	**1.68**	**1.68**
10	KSQ01717 0168 T591	20.62	2.40	1.45	0.40	17.17	1.68	1.68
11	KSQ01877 0168 T591	22.23	2.40	1.45	0.40	18.77	**1.68**	**1.68**
12	KSQ02035 0168 T591	23.80	2.40	1.45	0.40	20.35	1.68	1.68
13	KSQ02195 0168 T591	25.40	2.40	1.45	0.40	21.95	**1.68**	**1.68**
14	KSQ02352 0168 T591	26.97	2.40	1.45	0.40	23.52	1.68	1.68
15	KSQ02512 0168 T591	28.58	2.40	1.45	0.40	25.12	**1.68**	**1.68**
16	KSQ02670 0168 T591	30.15	2.40	1.45	0.40	26.70	1.68	1.68
17	KSQ02830 0168 T591	31.75	2.40	1.45	0.40	28.30	**1.68**	**1.68**
18	KSQ02987 0168 T591	33.32	2.40	1.45	0.40	29.87	1.68	1.68
19	KSQ03147 0168 T591	34.93	2.40	1.45	0.40	31.47	**1.68**	**1.68**
20	KSQ03305 0168 T591	36.50	2.40	1.45	0.40	33.05	1.68	1.68

Sl. No.	TRIADA® Part Numbers	Groove Dimensions			Groove Bottom Radius "Z"	Ring Dimensions		
		"ØA" H11	"L" +0.2	"L1" -0.05		"ØD"	W	T
21	KSQ03465 0168 T591	38.10	2.40	1.45	0.40	34.65	**1.68**	**1.68**
22	KSQ03782 0168 T591	41.28	2.40	1.45	0.40	37.82	1.68	1.68
23	KSQ04100 0168 T591	44.45	2.40	1.45	0.40	41.00	**1.68**	**1.68**
24	KSQ04417 0168 T591	47.63	2.40	1.45	0.40	44.17	1.68	1.68
25	KSQ04735 0168 T591	50.80	2.40	1.45	0.40	47.35	**1.68**	**1.68**
26	KSQ05052 0168 T591	53.98	2.40	1.45	0.40	50.52	1.68	1.68
27	KSQ05370 0168 T591	57.15	2.40	1.45	0.40	53.70	**1.68**	**1.68**
28	KSQ05687 0168 T591	60.33	2.40	1.45	0.40	56.87	1.68	1.68
29	KSQ06005 0168 T591	63.50	2.40	1.45	0.40	60.05	**1.68**	**1.68**
30	KSQ06322 0168 T591	66.68	2.40	1.45	0.40	63.22	1.68	1.68
31	KSQ06640 0168 T591	69.85	2.40	1.45	0.40	66.40	**1.68**	**1.68**
32	KSQ06957 0168 T591	73.03	2.40	1.45	0.40	69.57	1.68	1.68
33	KSQ07275 0168 T591	76.20	2.40	1.45	0.40	72.75	**1.68**	**1.68**
34	KSQ07592 0168 T591	79.38	2.40	1.45	0.40	75.92	1.68	1.68
35	KSQ08227 0168 T591	85.73	2.40	1.45	0.40	82.27	**1.68**	**1.68**
36	KSQ08862 0168 T591	92.08	2.40	1.45	0.40	88.62	1.68	1.68
37	KSQ09497 0168 T591	98.43	2.40	1.45	0.40	94.97	**1.68**	**1.68**
38	KSQ10132 0168 T591	107.95	2.40	1.45	0.40	101.32	1.68	1.68
39	KSQ10767 0168 T591	111.13	2.40	1.45	0.40	107.67	**1.68**	**1.68**
40	KSQ11402 0168 T591	117.48	2.40	1.45	0.40	114.02	1.68	1.68

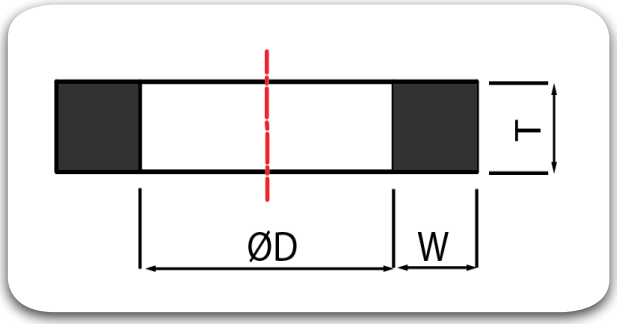

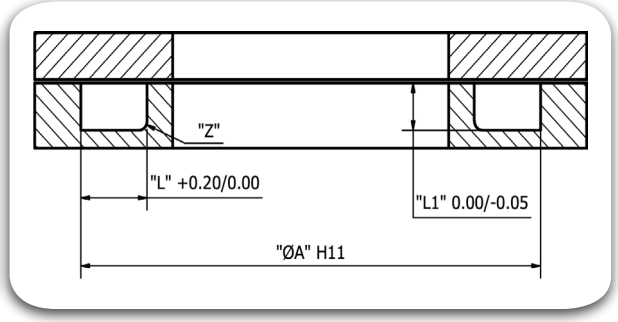

Sl. No.	TRIADA® Part Numbers	Groove Dimensions			Groove Bottom Radius "Z"	Ring Dimensions		
		"ØA" H11	"L" +0.2	"L1" -0.05		"ØD"	W	T
41	KSQ12037 0168 T591	123.83	2.40	1.45	0.40	120.37	**1.68**	**1.68**
42	KSQ12672 0168 T591	130.18	2.40	1.45	0.40	126.72	1.68	1.68
43	KSQ13307 0168 T591	136.53	2.40	1.45	0.40	133.07	**1.68**	**1.68**
44	KSQ00442 0251 T591	9.53	3.60	2.30	0.40	4.42	2.51	2.51
45	KSQ00523 0251 T591	10.31	3.60	2.30	0.40	5.23	**2.51**	**2.51**
46	KSQ00602 0251 T591	11.10	3.60	2.30	0.40	6.02	2.51	2.51
47	KSQ00759 0251 T591	12.70	3.60	2.30	0.40	7.59	**2.51**	**2.51**
48	KSQ00919 0251 T591	14.27	3.60	2.30	0.40	9.19	2.51	2.51
49	KSQ01077 0251 T591	15.88	3.60	2.30	0.40	10.77	**2.51**	**2.51**
50	KSQ01237 0251 T591	17.45	3.60	2.30	0.40	12.37	2.51	2.51
51	KSQ01394 0251 T591	19.05	3.60	2.30	0.40	13.94	**2.51**	**2.51**
52	KSQ01554 0251 T591	20.62	3.60	2.30	0.40	15.54	2.51	2.51
53	KSQ01712 0251 T591	22.23	3.60	2.30	0.40	17.12	**2.51**	**2.51**
54	KSQ01872 0251 T591	23.80	3.60	2.30	0.40	18.72	2.51	2.51
55	KSQ02029 0251 T591	25.40	3.60	2.30	0.40	20.29	**2.51**	**2.51**
56	KSQ02189 0251 T591	26.97	3.60	2.30	0.40	21.89	2.51	2.51
57	KSQ02347 0251 T591	28.58	3.60	2.30	0.40	23.47	**2.51**	**2.51**
58	KSQ02507 0251 T591	30.15	3.60	2.30	0.40	25.07	2.51	2.51
59	KSQ02664 0251 T591	31.75	3.60	2.30	0.40	26.64	**2.51**	**2.51**
60	KSQ02824 0251 T591	33.32	3.60	2.30	0.40	28.24	2.51	2.51

Sl. No.	TRIADA® Part Numbers	Groove Dimensions			Groove Bottom Radius "Z"	Ring Dimensions		
		"ØA" H11	"L" +0.2	"L1" -0.05		"ØD"	W	T
61	KSQ02982 0251 T591	34.93	3.60	2.30	0.40	29.82	**2.51**	**2.51**
62	KSQ03142 0251 T591	36.50	3.60	2.30	0.40	31.42	2.51	2.51
63	KSQ03299 0251 T591	38.10	3.60	2.30	0.40	32.99	**2.51**	**2.51**
64	KSQ03459 0251 T591	39.67	3.60	2.30	0.40	34.59	2.51	2.51
65	KSQ03617 0251 T591	41.28	3.60	2.30	0.40	36.17	**2.51**	**2.51**
66	KSQ03777 0251 T591	42.85	3.60	2.30	0.40	37.77	2.51	2.51
67	KSQ03934 0251 T591	44.45	3.60	2.30	0.40	39.34	**2.51**	**2.51**
68	KSQ04094 0251 T591	46.02	3.60	2.30	0.40	40.94	2.51	2.51
69	KSQ04252 0251 T591	47.63	3.60	2.30	0.40	42.52	**2.51**	**2.51**
70	KSQ04412 0251 T591	49.20	3.60	2.30	0.40	44.12	2.51	2.51
71	KSQ04569 0251 T591	50.80	3.60	2.30	0.40	45.69	**2.51**	**2.51**
72	KSQ04729 0251 T591	52.37	3.60	2.30	0.40	47.29	2.51	2.51
73	KSQ04890 0251 T591	53.98	3.60	2.30	0.40	48.90	**2.51**	**2.51**
74	KSQ05047 0251 T591	55.55	3.60	2.30	0.40	50.47	2.51	2.51
75	KSQ05207 0251 T591	57.15	3.60	2.30	0.40	52.07	**2.51**	**2.51**
76	KSQ05364 0251 T591	58.72	3.60	2.30	0.40	53.64	2.51	2.51
77	KSQ05525 0251 T591	60.33	3.60	2.30	0.40	55.25	**2.51**	**2.51**
78	KSQ05682 0251 T591	61.90	3.60	2.30	0.40	56.82	2.51	2.51
79	KSQ05842 0251 T591	63.50	3.60	2.30	0.40	58.42	**2.51**	**2.51**
80	KSQ06000 0251 T591	65.07	3.60	2.30	0.40	60.00	2.51	2.51

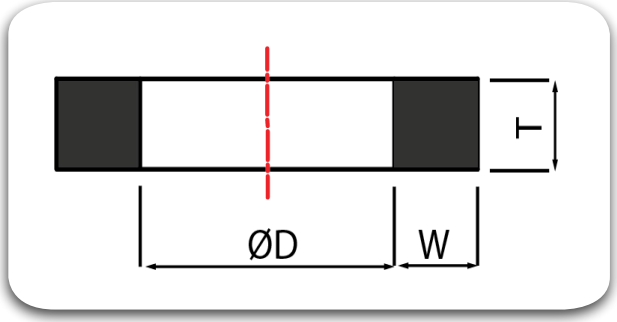

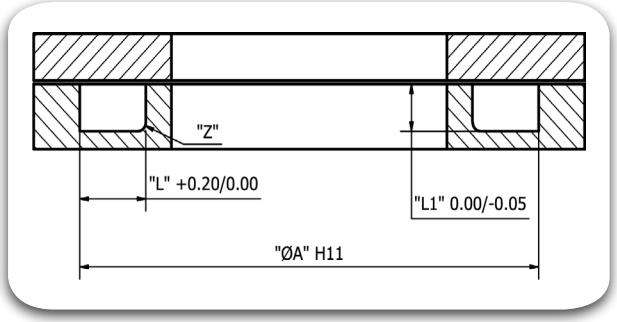

Sl. No.	TRIADA® Part Numbers	Groove Dimensions			Groove Bottom Radius "Z"	Ring Dimensions		
		"ØA" H11	"L" +0.2	"L1" -0.05		"ØD"	W	T
81	KSQ06160 0251 T591	66.68	3.60	2.30	0.40	61.60	**2.51**	**2.51**
82	KSQ06317 0251 T591	68.25	3.60	2.30	0.40	63.17	2.51	2.51
83	KSQ06477 0251 T591	69.85	3.60	2.30	0.40	64.77	**2.51**	**2.51**
84	KSQ06634 0251 T591	71.42	3.60	2.30	0.40	66.34	2.51	2.51
85	KSQ06795 0251 T591	73.03	3.60	2.30	0.40	67.95	**2.51**	**2.51**
86	KSQ06952 0251 T591	74.60	3.60	2.30	0.40	69.52	2.51	2.51
87	KSQ07112 0251 T591	76.20	3.60	2.30	0.40	71.12	**2.51**	**2.51**
88	KSQ07269 0251 T591	77.77	3.60	2.30	0.40	72.69	2.51	2.51
89	KSQ07587 0251 T591	80.95	3.60	2.30	0.40	75.87	**2.51**	**2.51**
90	KSQ08222 0251 T591	87.30	3.60	2.30	0.40	82.22	2.51	2.51
91	KSQ08857 0251 T591	93.65	3.60	2.30	0.40	88.57	**2.51**	**2.51**
92	KSQ09492 0251 T591	100.00	3.60	2.30	0.40	94.92	2.51	2.51
93	KSQ10127 0251 T591	106.35	3.60	2.30	0.40	101.27	**2.51**	**2.51**
94	KSQ10762 0251 T591	112.70	3.60	2.30	0.40	107.62	2.51	2.51
95	KSQ11397 0251 T591	119.05	3.60	2.30	0.40	113.97	**2.51**	**2.51**
96	KSQ12032 0251 T591	125.40	3.60	2.30	0.40	120.32	2.51	2.51
97	KSQ12667 0251 T591	131.75	3.60	2.30	0.40	126.67	**2.51**	**2.51**
98	KSQ13302 0251 T591	138.10	3.60	2.30	0.40	133.02	2.51	2.51
99	KSQ13937 0251 T591	144.45	3.60	2.30	0.40	139.37	**2.51**	**2.51**
100	KSQ14572 0251 T591	150.80	3.60	2.30	0.40	145.72	2.51	2.51

Sl. No.	TRIADA® Part Numbers	Groove Dimensions			Groove Bottom Radius "Z"	Ring Dimensions		
		"ØA" H11	"L" +0.2	"L1" -0.05		"ØD"	W	T
101	KSQ15207 0251 T591	157.15	3.60	2.30	0.40	152.07	**2.51**	**2.51**
102	KSQ15842 0251 T591	163.50	3.60	2.30	0.40	158.42	2.51	2.51
103	KSQ16477 0251 T591	169.85	3.60	2.30	0.40	164.77	**2.51**	**2.51**
104	KSQ17112 0251 T591	176.20	3.60	2.30	0.40	171.12	2.51	2.51
105	KSQ17747 0251 T591	182.55	3.60	2.30	0.40	177.47	**2.51**	**2.51**
106	KSQ18382 0251 T591	188.90	3.60	2.30	0.40	183.82	2.51	2.51
107	KSQ19017 0251 T591	195.25	3.60	2.30	0.40	190.17	**2.51**	**2.51**
108	KSQ19652 0251 T591	201.60	3.60	2.30	0.40	196.52	2.51	2.51
109	KSQ20287 0251 T591	207.95	3.60	2.30	0.40	202.87	**2.51**	**2.51**
110	KSQ20922 0251 T591	214.30	3.60	2.30	0.40	209.22	2.51	2.51
111	KSQ21557 0251 T591	220.65	3.60	2.30	0.40	215.57	**2.51**	**2.51**
112	KSQ22192 0251 T591	227.00	3.60	2.30	0.40	221.92	2.51	2.51
113	KSQ22827 0251 T591	233.35	3.60	2.30	0.40	228.27	**2.51**	**2.51**
114	KSQ23462 0251 T591	239.70	3.60	2.30	0.40	234.62	2.51	2.51
115	KSQ24097 0251 T591	246.05	3.60	2.30	0.40	240.97	**2.51**	**2.51**
116	KSQ24732 0251 T591	252.40	3.60	2.30	0.40	247.32	2.51	2.51
117	KSQ00434 0340 T591	11.10	4.80	3.10	0.60	4.34	**3.40**	**3.40**
118	KSQ00594 0340 T591	12.70	4.80	3.10	0.60	5.94	3.40	3.40
119	KSQ00752 0340 T591	14.27	4.80	3.10	0.60	7.52	**3.40**	**3.40**
120	KSQ00912 0340 T591	15.88	4.80	3.10	0.60	9.12	3.40	3.40

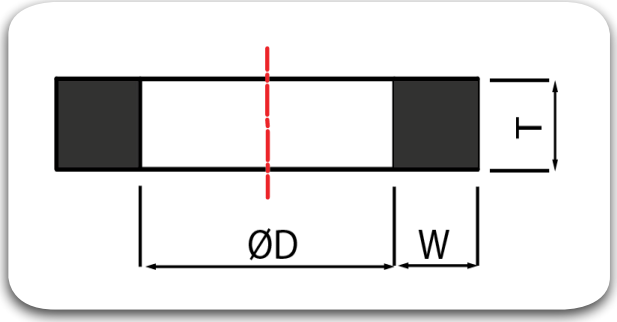

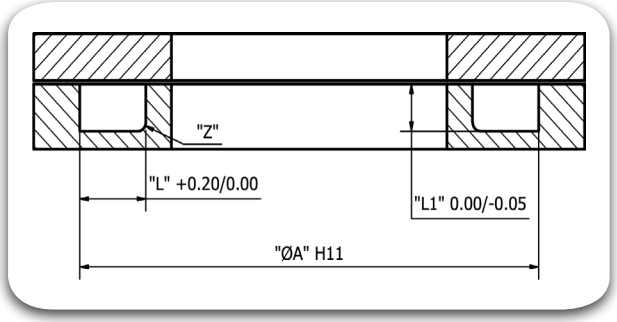

Sl. No.	TRIADA® Part Numbers	Groove Dimensions			Groove Bottom Radius "Z"	Ring Dimensions		
		"ØA" H11	"L" +0.2	"L1" -0.05		"ØD"	W	T
121	KSQ01069 0340 T591	17.45	4.80	3.10	0.60	10.69	**3.40**	**3.40**
122	KSQ01229 0340 T591	19.05	4.80	3.10	0.60	12.29	3.40	3.40
123	KSQ01387 0340 T591	20.62	4.80	3.10	0.60	13.87	**3.40**	**3.40**
124	KSQ01547 0340 T591	22.23	4.80	3.10	0.60	15.47	3.40	3.40
125	KSQ01704 0340 T591	23.80	4.80	3.10	0.60	17.04	**3.40**	**3.40**
126	KSQ01864 0340 T591	25.40	4.80	3.10	0.60	18.64	3.40	3.40
127	KSQ02022 0340 T591	26.97	4.80	3.10	0.60	20.22	**3.40**	**3.40**
128	KSQ02182 0340 T591	28.58	4.80	3.10	0.60	21.82	3.40	3.40
129	KSQ02339 0340 T591	30.15	4.80	3.10	0.60	23.39	**3.40**	**3.40**
130	KSQ02499 0340 T591	31.75	4.80	3.10	0.60	24.99	3.40	3.40
131	KSQ02657 0340 T591	33.32	4.80	3.10	0.60	26.57	**3.40**	**3.40**
132	KSQ02817 0340 T591	34.93	4.80	3.10	0.60	28.17	3.40	3.40
133	KSQ02974 0340 T591	36.50	4.80	3.10	0.60	29.74	**3.40**	**3.40**
134	KSQ03134 0340 T591	38.10	4.80	3.10	0.60	31.34	3.40	3.40
135	KSQ03292 0340 T591	39.67	4.80	3.10	0.60	32.92	**3.40**	**3.40**
136	KSQ03452 0340 T591	41.28	4.80	3.10	0.60	34.52	3.40	3.40
137	KSQ03609 0340 T591	42.85	4.80	3.10	0.60	36.09	**3.40**	**3.40**
138	KSQ03769 0340 T591	44.45	4.80	3.10	0.60	37.69	3.40	3.40
139	KSQ04087 0340 T591	47.63	4.80	3.10	0.60	40.87	**3.40**	**3.40**
140	KSQ04404 0340 T591	50.80	4.80	3.10	0.60	44.04	3.40	3.40

Sl. No.	TRIADA® Part Numbers	Groove Dimensions			Groove Bottom Radius "Z"	Ring Dimensions		
		"ØA" H11	"L" +0.2	"L1" -0.05		"ØD"	W	T
141	KSQ04722 0340 T591	53.98	4.80	3.10	0.60	47.22	**3.40**	**3.40**
142	KSQ05039 0340 T591	57.15	4.80	3.10	0.60	50.39	3.40	3.40
143	KSQ05357 0340 T591	60.33	4.80	3.10	0.60	53.57	**3.40**	**3.40**
144	KSQ05674 0340 T591	63.50	4.80	3.10	0.60	56.74	3.40	3.40
145	KSQ05992 0340 T591	66.68	4.80	3.10	0.60	59.92	**3.40**	**3.40**
146	KSQ06309 0340 T591	69.85	4.80	3.10	0.60	63.09	3.40	3.40
147	KSQ06627 0340 T591	73.03	4.80	3.10	0.60	66.27	**3.40**	**3.40**
148	KSQ06944 0340 T591	76.20	4.80	3.10	0.60	69.44	3.40	3.40
149	KSQ07262 0340 T591	79.38	4.80	3.10	0.60	72.62	**3.40**	**3.40**
150	KSQ07579 0340 T591	82.55	4.80	3.10	0.60	75.79	3.40	3.40
151	KSQ07897 0340 T591	85.73	4.80	3.10	0.60	78.97	**3.40**	**3.40**
152	KSQ08214 0340 T591	88.90	4.80	3.10	0.60	82.14	3.40	3.40
153	KSQ08532 0340 T591	92.08	4.80	3.10	0.60	85.32	**3.40**	**3.40**
154	KSQ08849 0340 T591	95.25	4.80	3.10	0.60	88.49	3.40	3.40
155	KSQ09167 0340 T591	98.43	4.80	3.10	0.60	91.67	**3.40**	**3.40**
156	KSQ09484 0340 T591	101.60	4.80	3.10	0.60	94.84	3.40	3.40
157	KSQ09802 0340 T591	104.78	4.80	3.10	0.60	98.02	**3.40**	**3.40**
158	KSQ10119 0340 T591	107.95	4.80	3.10	0.60	101.19	3.40	3.40
159	KSQ10437 0340 T591	111.13	4.80	3.10	0.60	104.37	**3.40**	**3.40**
160	KSQ10754 0340 T591	114.30	4.80	3.10	0.60	107.54	3.40	3.40

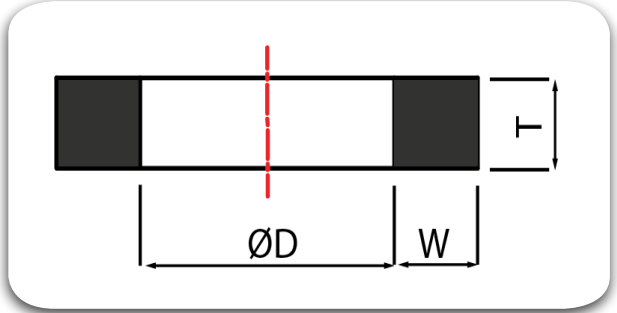

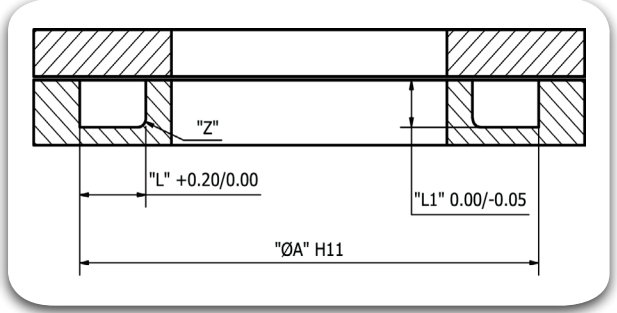

Sl. No.	TRIADA® Part Numbers	Groove Dimensions			Groove Bottom Radius "Z"	Ring Dimensions		
		"ØA" H11	"L" +0.2	"L1" -0.05		"ØD"	W	T
161	KSQ11072 0340 T591	117.48	4.80	3.10	0.60	110.72	**3.40**	**3.40**
162	KSQ11389 0340 T591	120.65	4.80	3.10	0.60	113.89	3.40	3.40
163	KSQ11707 0340 T591	123.83	4.80	3.10	0.60	117.07	**3.40**	**3.40**
164	KSQ12024 0340 T591	127.00	4.80	3.10	0.60	120.24	3.40	3.40
165	KSQ12342 0340 T591	130.18	4.80	3.10	0.60	123.42	**3.40**	**3.40**
166	KSQ12659 0340 T591	133.35	4.80	3.10	0.60	126.59	3.40	3.40
167	KSQ12977 0340 T591	136.53	4.80	3.10	0.60	129.77	**3.40**	**3.40**
168	KSQ13294 0340 T591	139.70	4.80	3.10	0.60	132.94	3.40	3.40
169	KSQ13612 0340 T591	142.88	4.80	3.10	0.60	136.12	**3.40**	**3.40**
170	KSQ13929 0340 T591	146.05	4.80	3.10	0.60	139.29	3.40	3.40
171	KSQ14247 0340 T591	149.23	4.80	3.10	0.60	142.47	**3.40**	**3.40**
172	KSQ14564 0340 T591	153.40	4.80	3.10	0.60	145.64	3.40	3.40
173	KSQ14882 0340 T591	155.58	4.80	3.10	0.60	148.82	**3.40**	**3.40**
174	KSQ15199 0340 T591	158.75	4.80	3.10	0.60	151.99	3.40	3.40
175	KSQ15834 0340 T591	165.10	4.80	3.10	0.60	158.34	**3.40**	**3.40**
176	KSQ16469 0340 T591	171.45	4.80	3.10	0.60	164.69	3.40	3.40
177	KSQ17104 0340 T591	177.80	4.80	3.10	0.60	171.04	**3.40**	**3.40**
178	KSQ17739 0340 T591	184.15	4.80	3.10	0.60	177.39	3.40	3.40
179	KSQ18374 0340 T591	190.50	4.80	3.10	0.60	183.74	**3.40**	**3.40**
180	KSQ19009 0340 T591	196.85	4.80	3.10	0.60	190.09	3.40	3.40

Sl. No.	TRIADA® Part Numbers	Groove Dimensions			Groove Bottom Radius "Z"	Ring Dimensions		
		"ØA" H11	"L" +0.2	"L1" -0.05		"ØD"	W	T
181	KSQ19644 0340 T591	203.20	4.80	3.10	0.60	196.44	**3.40**	**3.40**
182	KSQ20279 0340 T591	209.55	4.80	3.10	0.60	202.79	3.40	3.40
183	KSQ20914 0340 T591	215.90	4.80	3.10	0.60	209.14	**3.40**	**3.40**
184	KSQ21549 0340 T591	222.25	4.80	3.10	0.60	215.49	3.40	3.40
185	KSQ22184 0340 T591	228.60	4.80	3.10	0.60	221.84	**3.40**	**3.40**
186	KSQ22819 0340 T591	234.95	4.80	3.10	0.60	228.19	3.40	3.40
187	KSQ23454 0340 T591	241.30	4.80	3.10	0.60	234.54	**3.40**	**3.40**
188	KSQ24089 0340 T591	247.65	4.80	3.10	0.60	240.89	3.40	3.40
189	KSQ24724 0340 T591	254.00	4.80	3.10	0.60	247.24	**3.40**	**3.40**
190	KSQ25359 0340 T591	260.35	4.80	3.10	0.60	253.59	3.40	3.40
191	KSQ26629 0340 T591	273.05	4.80	3.10	0.60	266.29	**3.40**	**3.40**
192	KSQ27899 0340 T591	285.75	4.80	3.10	0.60	278.99	3.40	3.40
193	KSQ29169 0340 T591	298.45	4.80	3.10	0.60	291.69	**3.40**	**3.40**
194	KSQ30439 0340 T591	311.15	4.80	3.10	0.60	304.39	3.40	3.40
195	KSQ32979 0340 T591	336.55	4.80	3.10	0.60	329.79	**3.40**	**3.40**
196	KSQ35519 0340 T591	361.95	4.80	3.10	0.60	355.19	3.40	3.40
197	KSQ38059 0340 T591	387.35	4.80	3.10	0.60	380.59	**3.40**	**3.40**
198	KSQ40526 0340 T591	412.75	4.80	3.10	0.60	405.26	3.40	3.40
199	KSQ43066 0340 T591	438.15	4.80	3.10	0.60	430.66	**3.40**	**3.40**
200	KSQ45606 0340 T591	463.55	4.80	3.10	0.60	456.06	3.40	3.40

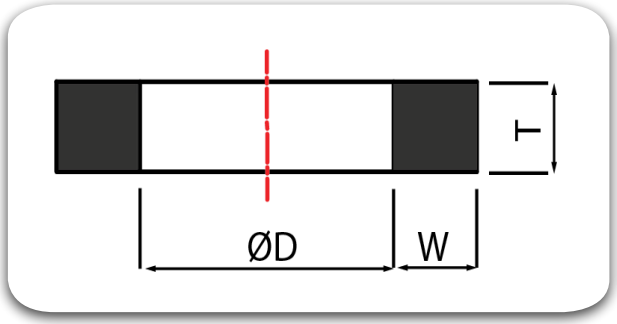

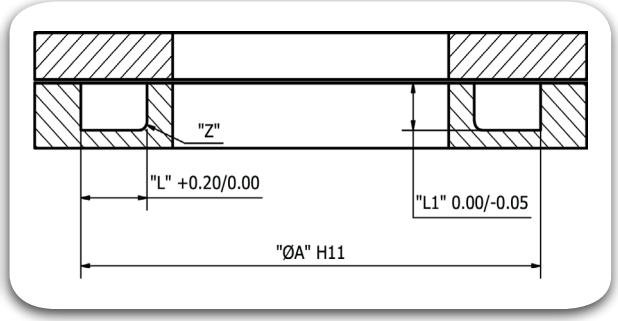

Sl. No.	TRIADA® Part Numbers	Groove Dimensions			Groove Bottom Radius "Z"	Ring Dimensions		
		"ØA" H11	"L" +0.2	"L1" -0.05		"ØD"	W	T
201	KSQ01046 0516 T591	20.62	7.10	4.75	0.80	10.46	**5.16**	**5.16**
202	KSQ01207 0516 T591	22.23	7.10	4.75	0.80	12.07	5.16	5.16
203	KSQ01364 0516 T591	23.80	7.10	4.75	0.80	13.64	**5.16**	**5.16**
204	KSQ01524 0516 T591	25.40	7.10	4.75	0.80	15.24	5.16	5.16
205	KSQ01681 0516 T591	26.97	7.10	4.75	0.80	16.81	**5.16**	**5.16**
206	KSQ01842 0516 T591	28.58	7.10	4.75	0.80	18.42	5.16	5.16
207	KSQ01999 0516 T591	30.15	7.10	4.75	0.80	19.99	**5.16**	**5.16**
208	KSQ02159 0516 T591	31.75	7.10	4.75	0.80	21.59	5.16	5.16
209	KSQ02316 0516 T591	33.32	7.10	4.75	0.80	23.16	**5.16**	**5.16**
210	KSQ02477 0516 T591	34.93	7.10	4.75	0.80	24.77	5.16	5.16
211	KSQ02634 0516 T591	36.50	7.10	4.75	0.80	26.34	**5.16**	**5.16**
212	KSQ02794 0516 T591	38.10	7.10	4.75	0.80	27.94	5.16	5.16
213	KSQ02951 0516 T591	39.67	7.10	4.75	0.80	29.51	**5.16**	**5.16**
214	KSQ03112 0516 T591	41.28	7.10	4.75	0.80	31.12	5.16	5.16
215	KSQ03269 0516 T591	42.85	7.10	4.75	0.80	32.69	**5.16**	**5.16**
216	KSQ03429 0516 T591	44.45	7.10	4.75	0.80	34.29	5.16	5.16
217	KSQ03747 0516 T591	47.63	7.10	4.75	0.80	37.47	**5.16**	**5.16**
218	KSQ04064 0516 T591	50.80	7.10	4.75	0.80	40.64	5.16	5.16
219	KSQ04382 0516 T591	53.98	7.10	4.75	0.80	43.82	**5.16**	**5.16**
220	KSQ04699 0516 T591	57.15	7.10	4.75	0.80	46.99	5.16	5.16

Sl. No.	TRIADA® Part Numbers	Groove Dimensions			Groove Bottom Radius "Z"	Ring Dimensions		
		"ØA" H11	"L" +0.2	"L1" -0.05		"ØD"	W	T
221	KSQ05017 0516 T591	60.33	7.10	4.75	0.80	50.17	**5.16**	**5.16**
222	KSQ05334 0516 T591	63.50	7.10	4.75	0.80	53.34	5.16	5.16
223	KSQ05652 0516 T591	66.68	7.10	4.75	0.80	56.52	**5.16**	**5.16**
224	KSQ05969 0516 T591	69.85	7.10	4.75	0.80	59.69	5.16	5.16
225	KSQ06287 0516 T591	73.03	7.10	4.75	0.80	62.87	**5.16**	**5.16**
226	KSQ06604 0516 T591	76.20	7.10	4.75	0.80	66.04	5.16	5.16
227	KSQ06922 0516 T591	79.38	7.10	4.75	0.80	69.22	**5.16**	**5.16**
228	KSQ07239 0516 T591	82.55	7.10	4.75	0.80	72.39	5.16	5.16
229	KSQ07557 0516 T591	85.73	7.10	4.75	0.80	75.57	**5.16**	**5.16**
230	KSQ07874 0516 T591	88.90	7.10	4.75	0.80	78.74	5.16	5.16
231	KSQ08192 0516 T591	92.08	7.10	4.75	0.80	81.92	**5.16**	**5.16**
232	KSQ08509 0516 T591	95.25	7.10	4.75	0.80	85.09	5.16	5.16
233	KSQ08827 0516 T591	98.43	7.10	4.75	0.80	88.27	**5.16**	**5.16**
234	KSQ09144 0516 T591	101.60	7.10	4.75	0.80	91.44	5.16	5.16
235	KSQ09462 0516 T591	104.78	7.10	4.75	0.80	94.62	**5.16**	**5.16**
236	KSQ09779 0516 T591	107.95	7.10	4.75	0.80	97.79	5.16	5.16
237	KSQ10097 0516 T591	111.13	7.10	4.75	0.80	100.97	**5.16**	**5.16**
238	KSQ10497 0516 T591	114.30	7.10	4.75	0.80	104.14	5.16	5.16
239	KSQ10732 0516 T591	117.48	7.10	4.75	0.80	107.32	**5.16**	**5.16**
240	KSQ11049 0516 T591	120.65	7.10	4.75	0.80	110.49	5.16	5.16

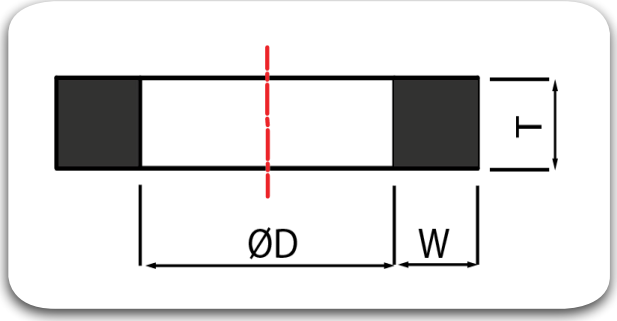

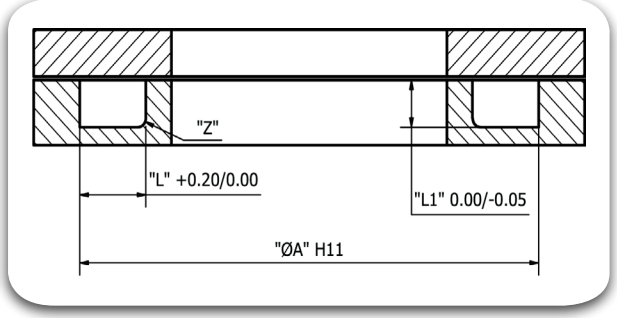

Sl. No.	TRIADA® Part Numbers	Groove Dimensions			Groove Bottom Radius "Z"	Ring Dimensions		
		"ØA" H11	"L" +0.2	"L1" -0.05		"ØD"	W	T
241	KSQ11367 0516 T591	123.83	7.10	4.75	0.80	113.67	**5.16**	**5.16**
242	KSQ11684 0516 T591	127.00	7.10	4.75	0.80	116.84	5.16	5.16
243	KSQ12002 0516 T591	130.18	7.10	4.75	0.80	120.02	**5.16**	**5.16**
244	KSQ12319 0516 T591	133.35	7.10	4.75	0.80	123.19	5.16	5.16
245	KSQ12637 0516 T591	136.53	7.10	4.75	0.80	126.37	**5.16**	**5.16**
246	KSQ12954 0516 T591	139.70	7.10	4.75	0.80	129.54	5.16	5.16
247	KSQ13272 0516 T591	142.88	7.10	4.75	0.80	132.72	**5.16**	**5.16**
248	KSQ13589 0516 T591	146.05	7.10	4.75	0.80	135.89	5.16	5.16
249	KSQ13907 0516 T591	149.23	7.10	4.75	0.80	139.07	**5.16**	**5.16**
250	KSQ14224 0516 T591	152.40	7.10	4.75	0.80	142.24	5.16	5.16
251	KSQ14542 0516 T591	155.58	7.10	4.75	0.80	145.42	**5.16**	**5.16**
252	KSQ14859 0516 T591	158.75	7.10	4.75	0.80	148.59	5.16	5.16
253	KSQ15177 0516 T591	161.93	7.10	4.75	0.80	151.77	**5.16**	**5.16**
254	KSQ15812 0516 T591	168.28	7.10	4.75	0.80	158.12	5.16	5.16
255	KSQ16447 0516 T591	174.63	7.10	4.75	0.80	164.47	**5.16**	**5.16**
256	KSQ17082 0516 T591	180.98	7.10	4.75	0.80	170.82	5.16	5.16
257	KSQ17717 0516 T591	187.33	7.10	4.75	0.80	177.17	**5.16**	**5.16**
258	KSQ18352 0516 T591	193.68	7.10	4.75	0.80	183.52	5.16	5.16
259	KSQ18987 0516 T591	200.03	7.10	4.75	0.80	189.87	**5.16**	**5.16**
260	KSQ19622 0516 T591	206.38	7.10	4.75	0.80	196.22	5.16	5.16

Sl. No.	TRIADA® Part Numbers	Groove Dimensions			Groove Bottom Radius "Z"	Ring Dimensions		
		"ØA" H11	"L" +0.2	"L1" -0.05		"ØD"	W	T
261	KSQ20257 0516 T591	212.73	7.10	4.75	0.80	202.57	**5.16**	**5.16**
262	KSQ20892 0516 T591	219.08	7.10	4.75	0.80	208.92	5.16	5.16
263	KSQ21527 0516 T591	225.43	7.10	4.75	0.80	215.27	**5.16**	**5.16**
264	KSQ22162 0516 T591	231.78	7.10	4.75	0.80	221.62	5.16	5.16
265	KSQ22797 0516 T591	238.13	7.10	4.75	0.80	227.97	**5.16**	**5.16**
266	KSQ23432 0516 T591	244.48	7.10	4.75	0.80	234.32	5.16	5.16
267	KSQ24067 0516 T591	250.83	7.10	4.75	0.80	240.67	**5.16**	**5.16**
268	KSQ24702 0516 T591	257.18	7.10	4.75	0.80	247.02	5.16	5.16
269	KSQ25337 0516 T591	263.53	7.10	4.75	0.80	253.37	**5.16**	**5.16**
270	KSQ26607 0516 T591	276.23	7.10	4.75	0.80	266.07	5.16	5.16
271	KSQ27877 0516 T591	288.93	7.10	4.75	0.80	278.77	**5.16**	**5.16**
272	KSQ29147 0516 T591	301.63	7.10	4.75	0.80	291.47	5.16	5.16
273	KSQ30417 0516 T591	314.33	7.10	4.75	0.80	304.17	**5.16**	**5.16**
274	KSQ32957 0516 T591	339.73	7.10	4.75	0.80	329.57	5.16	5.16
275	KSQ34597 0516 T591	365.13	7.10	4.75	0.80	345.97	**5.16**	**5.16**
276	KSQ38037 0516 T591	390.53	7.10	4.75	0.80	380.37	5.16	5.16
277	KSQ40527 0516 T591	415.93	7.10	4.75	0.80	405.27	**5.16**	**5.16**
278	KSQ43067 0516 T591	441.33	7.10	4.75	0.80	430.67	5.16	5.16
279	KSQ45607 0516 T591	466.73	7.10	4.75	0.80	456.07	**5.16**	**5.16**
280	KSQ11367 0673 T591	127.00	9.50	6.10	0.80	113.67	6.73	6.73

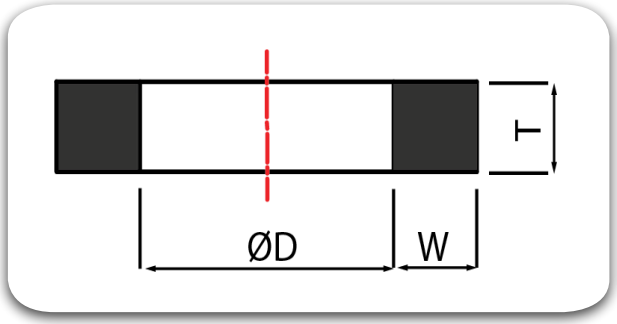

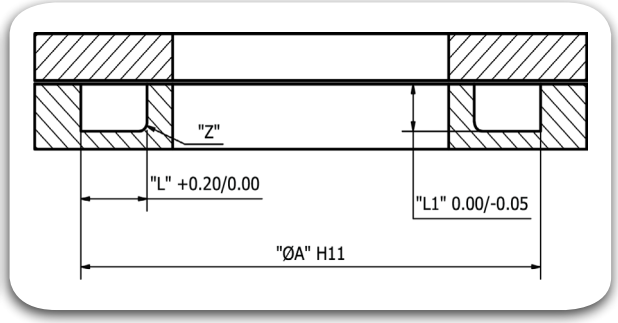

Sl. No.	TRIADA® Part Numbers	Groove Dimensions			Groove Bottom Radius "Z"	Ring Dimensions		
		"ØA" H11	"L" +0.2	"L1" -0.05		"ØD"	W	T
281	KSQ11684 0673 T591	130.18	9.50	6.10	0.80	116.84	**6.73**	**6.73**
282	KSQ12002 0673 T591	133.35	9.50	6.10	0.80	120.02	6.73	6.73
283	KSQ12319 0673 T591	136.53	9.50	6.10	0.80	123.19	**6.73**	**6.73**
284	KSQ12637 0673 T591	139.70	9.50	6.10	0.80	126.37	6.73	6.73
285	KSQ12954 0673 T591	142.88	9.50	6.10	0.80	129.54	**6.73**	**6.73**
286	KSQ13272 0673 T591	146.05	9.50	6.10	0.80	132.72	6.73	6.73
287	KSQ13589 0673 T591	149.23	9.50	6.10	0.80	135.89	**6.73**	**6.73**

Static Seals

LA1

TRIADA
TECHNOLOGIES

#Sealing**Excellence**




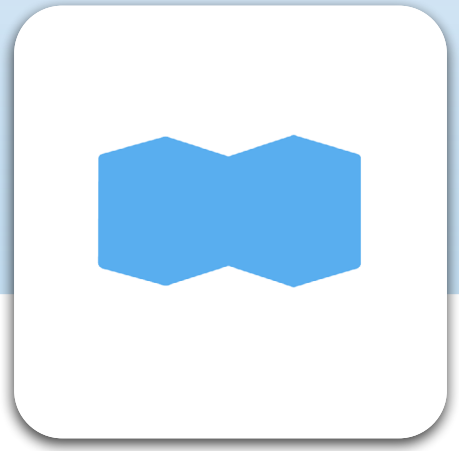

Description

An excellent alternative to the O-Ring + Back-up Ring, the use of high modulus polyurethane with a low compression-set prevents winding during assembling and avoid extrusion in working conditions. One single piece with symmetric profile allows the operator easier installation reducing at the same time the stock handling.

Advantages

•Ease of assembly
•High extrusion resistance and good compression set
•Simple groove design
•Universal applicability
•No problem of twisting

Diameter Range	Ø6.00 – Ø280.00
Standard material	TRIATHANE® T479(PU)
Temperature(°C)	-35° C to 110° C
Fluids	Hydraulic fluids (Mineral Oil based)
Pressure	< 500 bar (Please consult Triada Technologies for applications above 500bar)

Material Details

Seal Material	Seal Material Code
TRIATHANE® Poly-Urethane	T479

Nomenclature

Part No	LA1	1000	0908	097	T479
	Seal profile	Bore Dia x 10	Groove Dia x 10	Groove Width x 10	Seal Material Code

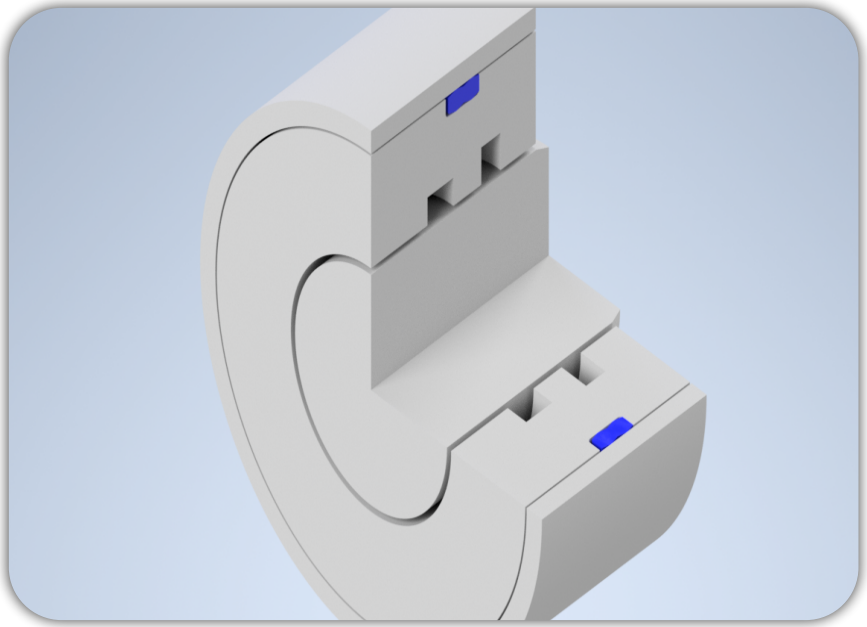

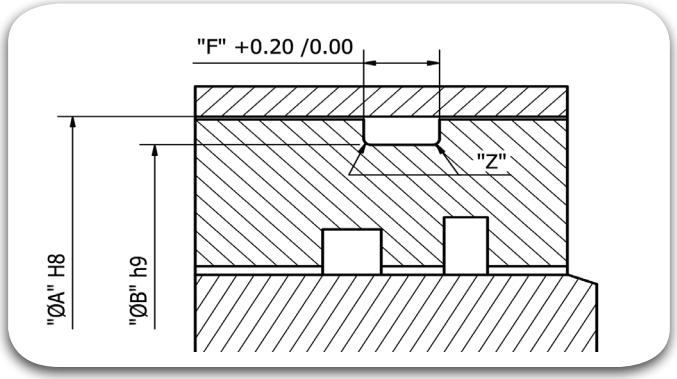

Sl. No.	TRIADA® Part Numbers	Bore "ØA" H8	Groove "ØB" h9	Groove Width "F" +0.20	Radius "Z" ±0.20
1	LA1 0060 0046 024 T479	6.00	4.60	2.40	0.30
2	LA1 0100 0076 036 T479	10.00	7.60	3.60	0.30
3	LA1 0110 0086 026 T479	11.00	8.60	2.60	0.30
4	LA1 0120 0096 036 T479	12.00	9.60	3.60	0.30
5	LA1 0138 0092 031 T479	13.80	9.20	3.10	0.30
6	LA1 0150 0126 036 T479	15.00	12.60	3.60	0.30
7	LA1 0155 0131 036 T479	15.50	13.10	3.60	0.30
8	LA1 0160 0136 036 T479	16.00	13.60	3.60	0.30
9	LA1 0166 0120 031 T479	16.60	12.00	3.10	0.30
10	LA1 0170 0146 026 T479	17.00	14.60	2.60	0.30
11	LA1 0170 0146 036 T479	17.00	14.60	3.60	0.30
12	LA1 0175 0151 026 T479	17.50	15.10	2.60	0.30
13	LA1 0175 0151 036 T479	17.50	15.10	3.60	0.30
14	LA1 0180 0140 058 T479	18.00	14.00	5.80	0.30
15	LA1 0180 0156 036 T479	18.00	15.60	3.60	0.30
16	LA1 0190 0156 036 T479	19.00	15.60	3.60	0.30
17	LA1 0190 0156 044 T479	19.00	15.60	4.40	0.30
18	LA1 0190 0166 026 T479	19.00	16.60	2.60	0.30
19	LA1 0190 0166 036 T479	19.00	16.60	3.60	0.30
20	LA1 0200 0160 160 T479	20.00	16.00	16.00	0.30

Sl. No.	TRIADA® Part Numbers	Bore "ØA" H8	Groove "ØB" h9	Groove Width "F" +0.20	Radius "Z" ±0.20
21	LA1 0200 0166 166 T479	20.00	16.60	16.60	0.30
22	LA1 0200 0166 166 T479	20.00	16.60	16.60	0.30
23	LA1 0200 0176 176 T479	20.00	17.60	17.60	0.30
24	LA1 0205 0172 172 T479	20.50	17.20	17.20	0.30
25	LA1 0210 0176 176 T479	21.00	17.60	17.60	0.30
26	LA1 0210 0186 186 T479	21.00	18.60	18.60	0.30
27	LA1 0215 0181 181 T479	21.50	18.10	18.10	0.30
28	LA1 0215 0191 191 T479	21.50	19.10	19.10	0.30
29	LA1 0220 0196 196 T479	22.00	19.60	19.60	0.30
30	LA1 0230 0196 196 T479	23.00	19.60	19.60	0.30
31	LA1 0230 0206 206 T479	23.00	20.60	20.60	0.30
32	LA1 0240 0200 200 T479	24.00	20.00	20.00	0.30
33	LA1 0240 0216 216 T479	24.00	21.60	21.60	0.30
34	LA1 0260 0220 220 T479	26.00	22.00	22.00	0.30
35	LA1 0268 0220 220 T479	26.80	22.00	22.00	0.30
36	LA1 0280 0238 238 T479	28.00	23.80	23.80	0.30
37	LA1 0286 0256 256 T479	28.60	25.60	25.60	0.30
38	LA1 0300 0251 251 T479	30.00	25.10	25.10	0.30
39	LA1 0300 0254 054 T479	30.00	25.40	5.40	0.30
40	LA1 0310 0264 050 T479	31.00	26.40	5.00	0.30

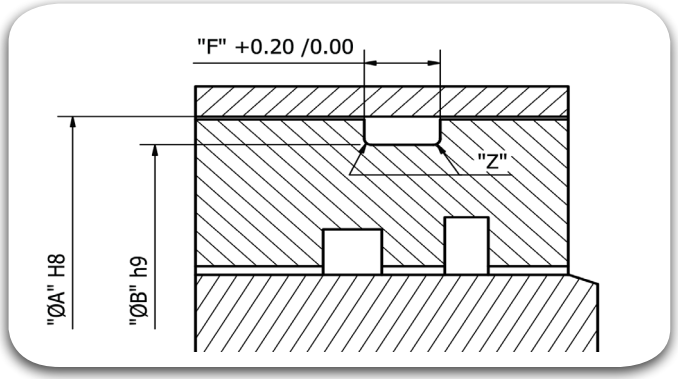

Sl. No.	TRIADA® Part Numbers	Bore "ØA" H8	Groove "ØB" h9	Groove Width "F" +0.20	Radius "Z" ±0.20
41	LA1 0320 0274 054 T479	32.00	27.40	5.40	0.30
42	LA1 0330 0200 156 T479	33.00	20.00	15.60	0.30
43	LA1 0340 0284 053 T479	34.00	28.40	5.30	0.30
44	LA1 0340 0311 036 T479	34.00	31.10	3.60	0.30
45	LA1 0350 0304 050 T479	35.00	30.40	5.00	0.30
46	LA1 0355 0309 050 T479	35.50	30.90	5.00	0.30
47	LA1 0360 0320 062 T479	36.00	32.00	6.20	0.30
48	LA1 0380 0324 053 T479	38.00	32.40	5.30	0.30
49	LA1 0400 0352 054 T479	40.00	35.20	5.40	0.30
50	LA1 0400 0354 054 T479	40.00	35.40	5.40	0.30
51	LA1 0428 0380 068 T479	42.80	38.00	6.80	0.30
52	LA1 0434 0378 062 T479	43.40	37.80	6.20	0.30
53	LA1 0450 0358 097 T479	45.00	35.80	9.70	0.30
54	LA1 0450 0400 054 T479	45.00	40.00	5.40	0.30
55	LA1 0500 0408 097 T479	50.00	40.80	9.70	0.30
56	LA1 0500 0438 056 T479	50.00	43.80	5.60	0.30
57	LA1 0500 0446 062 T479	50.00	44.60	6.20	0.30
58	LA1 0500 0454 039 T479	50.00	45.40	3.90	0.30
59	LA1 0500 0454 054 T479	50.00	45.40	5.40	0.30
60	LA1 0550 0458 098 T479	55.00	45.80	9.80	0.30

Sl. No.	TRIADA® Part Numbers	Bore "ØA" H8	Groove "ØB" h9	Groove Width "F" +0.20	Radius "Z" ±0.20
61	LA1 0550 0496 062 T479	55.00	49.60	6.20	0.30
62	LA1 0550 0499 053 T479	55.00	49.90	5.30	0.30
63	LA1 0550 0500 067 T479	55.00	50.00	6.70	0.30
64	LA1 0550 0510 036 T479	55.00	51.00	3.60	0.30
65	LA1 0570 0522 041 T479	57.00	52.20	4.10	0.30
66	LA1 0580 0500 090 T479	58.00	50.00	9.00	0.30
67	LA1 0600 0508 097 T479	60.00	50.80	9.70	0.30
68	LA1 0600 0544 058 T479	60.00	54.40	5.80	0.30
69	LA1 0600 0546 062 T479	60.00	54.60	6.20	0.30
70	LA1 0630 0538 097 T479	63.00	53.80	9.70	0.30
71	LA1 0630 0566 064 T479	63.00	56.60	6.40	0.30
72	LA1 0630 0574 048 T479	63.00	57.40	4.80	0.30
73	LA1 0630 0576 062 T479	63.00	57.60	6.20	0.30
74	LA1 0630 0584 054 T479	63.00	58.40	5.40	0.30
75	LA1 0650 0594 050 T479	65.00	59.40	5.00	0.30
76	LA1 0650 0596 062 T479	65.00	59.60	6.20	0.30
77	LA1 0650 0600 050 T479	65.00	60.00	5.00	0.30
78	LA1 0680 0627 050 T479	68.00	62.70	5.00	0.30
79	LA1 0696 0650 039 T479	69.60	65.00	3.90	0.30
80	LA1 0700 0650 050 T479	70.00	65.00	5.00	0.30

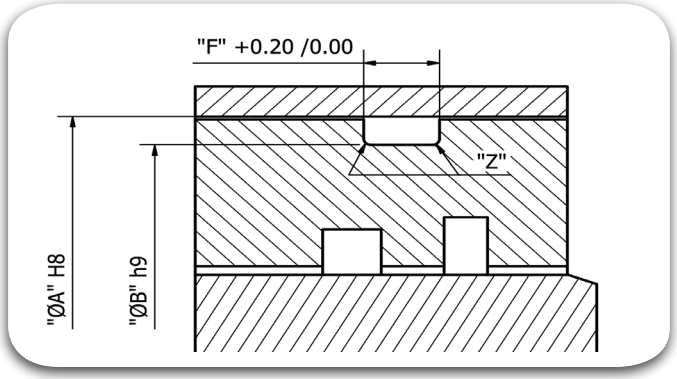

Sl. No.	TRIADA® Part Numbers	Bore "ØA" H8	Groove "ØB" h9	Groove Width "F" +0.20	Radius "Z" ±0.20
81	LA1 0700 0664 062 T479	70.00	66.40	6.20	0.30
82	LA1 0720 0664 050 T479	72.00	66.40	5.00	0.30
83	LA1 0735 0700 050 T479	73.50	70.00	5.00	0.30
84	LA1 0746 0700 038 T479	74.60	70.00	3.80	0.30
85	LA1 0750 0658 097 T479	75.00	65.80	9.70	0.30
86	LA1 9750 0694 053 T479	75.00	69.40	5.30	0.30
87	LA1 0750 0696 062 T479	75.00	69.60	6.20	0.30
88	LA1 0766 0720 048 T479	76.60	72.00	4.80	0.30
89	LA1 0770 0708 062 T479	77.00	70.80	6.20	0.30
90	LA1 0780 0730 050 T479	78.00	73.00	5.00	0.30
91	LA1 0800 0708 090 T479	80.00	70.80	9.00	0.30
92	LA1 0800 0708 097 T479	80.00	70.80	9.70	0.30
93	LA1 0736 0640 030 T479	80.00	73.60	6.40	0.30
94	LA1 0800 0738 069 T479	80.00	73.80	6.90	0.30
95	LA1 0800 0744 053 T479	80.00	74.40	5.30	0.30
96	LA1 0800 0754 054 T479	80.00	75.40	5.40	0.30
97	LA1 0800 0760 036 T479	80.00	76.00	3.60	0.30
98	LA1 0850 0794 053 T479	85.00	79.40	5.30	0.30
99	LA1 0851 0805 039 T479	85.10	80.50	3.90	0.30
100	LA1 0900 0814 090 T479	90.00	81.40	9.00	0.30

Sl. No.	TRIADA® Part Numbers	Bore "ØA" H8	Groove "ØB" h9	Groove Width "F" +0.20	Radius "Z" ±0.20
101	LA1 0900 0830 065 T479	90.00	83.00	6.50	0.30
102	LA1 0900 0844 048 T479	90.00	84.40	4.80	0.30
103	LA1 0930 0874 053 T479	93.00	87.40	5.30	0.30
104	LA1 0950 0894 062 T479	95.00	89.40	6.20	0.30
105	LA1 0970 0914 048 T479	97.00	91.40	4.80	0.30
106	LA1 1000 0908 097 T479	100.00	90.80	9.70	0.30
107	LA1 1000 0914 090 T479	100.00	91.40	9.00	0.30
108	LA1 1000 0916 086 T479	100.00	91.60	8.60	0.30
109	LA1 1000 0938 069 T479	100.00	93.80	6.90	0.30
110	LA1 1020 0958 062 T479	102.00	95.80	6.20	0.30
111	LA1 1050 0964 090 T479	105.00	96.40	9.00	0.30
112	LA1 1100 1008 097 T479	110.00	100.80	9.70	0.60
113	LA1 1100 1014 090 T479	110.00	101.40	9.00	0.30
114	LA1 1140 1078 062 T479	114.00	107.80	6.20	0.30
115	LA1 1150 1066 086 T479	115.00	106.60	8.60	0.60
116	LA1 1250 1158 097 T479	125.00	115.80	9.70	0.60
117	LA1 1250 1164 090 T479	125.00	116.40	9.00	0.30
118	LA1 1250 1166 086 T479	125.00	116.60	8.60	0.30
119	LA1 1400 1284 123 T479	140.00	128.40	12.30	0.60
120	LA1 1400 1308 097 T479	140.00	130.80	9.70	0.60

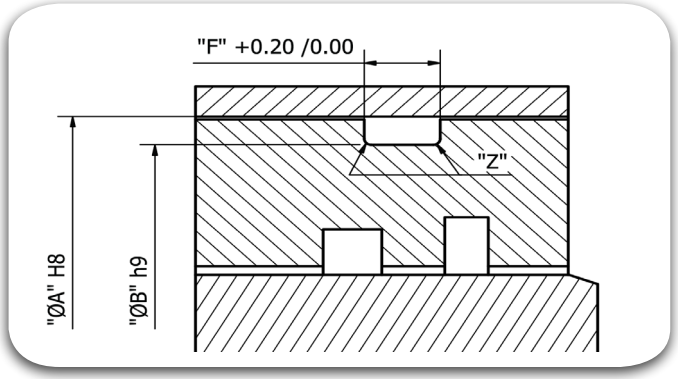

Sl. No.	TRIADA® Part Numbers	Bore "ØA" H8	Groove "ØB" h9	Groove Width "F" +0.20	Radius "Z" ±0.20
121	LA1 1400 1316 086 T479	140.00	131.60	8.60	0.30
122	LA1 1500 1384 123 T479	150.00	138.40	12.30	0.60
123	LA1 1500 1408 097 T479	150.00	140.80	9.70	0.60
124	LA1 1500 1416 086 T479	150.00	141.60	8.60	0.30
125	LA1 1600 1484 123 T479	160.00	148.40	12.30	0.60
126	LA1 1600 1508 097 T479	160.00	150.80	9.70	0.60
127	LA1 1650 1534 123 T479	165.00	153.40	12.30	0.60
128	LA1 1650 1558 097 T479	165.00	155.80	9.70	0.60
129	LA1 1650 1566 086 T479	165.00	156.60	8.60	0.30
130	LA1 1700 1584 123 T479	170.00	158.40	12.30	0.60
131	LA1 1700 1608 097 T479	170.00	160.80	9.70	0.60
132	LA1 1800 1684 123 T479	180.00	168.40	12.30	0.60
133	LA1 1800 1708 097 T479	180.00	170.80	9.70	0.60
134	LA1 1800 1716 086 T479	180.00	171.60	8.60	0.30
135	LA1 1900 1784 123 T479	190.00	178.40	12.30	0.60
136	LA1 2000 1884 123 T479	200.00	188.40	12.30	0.60
137	LA1 2000 1908 097 T479	200.00	190.80	9.70	0.60
138	LA1 2000 1916 086 T479	200.00	191.60	8.60	0.30
139	LA1 2250 2130 109 T479	225.00	213.00	10.90	0.60
140	LA1 2500 2380 109 T479	250.00	238.00	10.90	0.60

Sl. No.	TRIADA® Part Numbers	Bore "ØA" H8	Groove "ØB" h9	Groove Width "F" +0.20	Radius "Z" ±0.20
141	LA1 2500 3284 123 T479	250.00	238.40	12.30	0.60
142	LA1 2500 2408 097 T479	250.00	240.80	9.70	0.60
143	LA1 2700 2584 123 T479	270.00	258.40	12.30	0.60
144	LA1 2800 2680 109 T479	280.00	268.00	10.90	0.60

Static Seals

LOBE RING

TRIADA
TECHNOLOGIES

#SealingExcellence


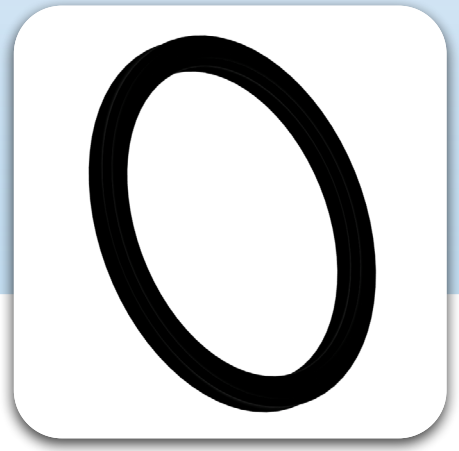
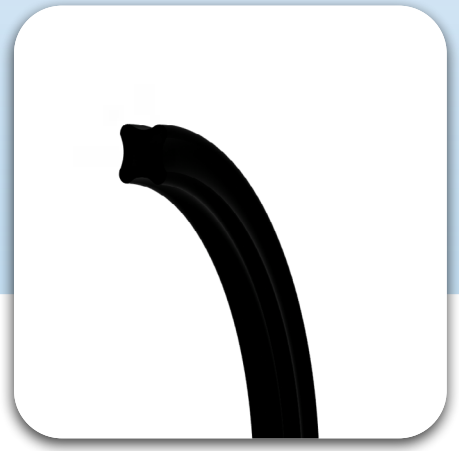
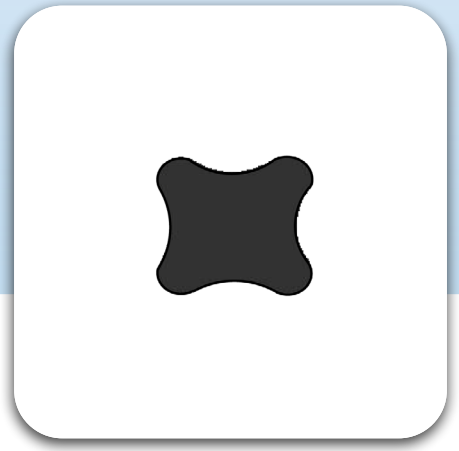

Description

A four lobbed elastomer seal, compatible to an O-Ring groove (AS568A), with an improved sealing efficiency. The diametrical squeeze is lower than with O-rings which make dynamic sealing possible with reduced friction. The four lips of the Lobe Ring create more sealing capacity and at the same time a groove for lubrication, which is very favorable for dynamic sealing and it is more resistant to spiral failure.
Lobe Rings are also a preferred Sealing Element for Rotary and Helical movements and suggested to be installed in the housing, rather than on the shaft, as this enables the seal to be assembled along with Uncut Back-Up Rings, in case of higher pressures. Please contact Triada® Application Engineering team for an appropriate Sealing Proposal for your specific application.

Diameter Range	Ø0.74 – Ø658.87.00
Standard material	TRIAFLEX® T571(NBR70)
Temperature(°C)	-40ºC to 200ºC (Based on Elastomer Material).
Speed	≤ 0.50 m/s (reciprocating) ≤ 2.00 m/s (rotating)
Fluids	Hydraulic fluids (Mineral Oil based), Water, Air etc, depending on Seal Compounds selected. Conditions).
Pressure	Dynamic Pressure - 50 bar without BU-Ring / 300 bar with BU-Ring (reciprocating) 150 bar with BU-Ring (rotating) Static Pressure - 50 bar without BU-Ring / 400 bar with BU-Ring (rotating)

Groove Details

Cross Section "W"	Radial Pre-Load		Groove Dimension					Radius "Z"	Maximum Diametrical Clearance "S"
	Dynamic	Static	Groove Depth		Groove Width				
	Max/Min	Max/Min	Dynamic	Static	Without Back-Up Ring	With 1 Back-Up Ring	With 2 Back-Up Ring		
1.02 ±0.08	0.30/0.115	0.35/0.165	0.80 +0.025	0.75 +0.025	1.20	NA	NA	0.10	0.05
1.25 ±0.08	0.33/0.145	0.43/0.245	1.00 +0.025	0.90 +0.025	1.40	NA	NA	0.15	0.05
1.52 ±0.08	0.35/0.165	0.45/0.265	1.25 +0.025	1.15 +0.025	1.70	NA	NA	0.25	0.08
1.02 ±0.08	0.30/0.115	0.30/0.165	0.80 +0.025	0.75 +0.025	1.20	NA	NA	0.10	0.05
1.50 ±0.08	0.33/0.145	0.43/0.245	1.25 +0.025	1.15 +0.025	1.70	2.60	3.50	0.25	0.08
1.78 ±0.08	0.36/0.175	0.46/0.275	1.50 +0.025	1.40 +0.025	2.00	3.50	5.00	0.25	0.10
2.62 ±0.08	0.40/0.215	0.45/0.265	2.30 +0.025	2.25 +0.025	3.00	4.40	5.80	0.40	0.15
3.53 ±0.10	0.43/0.205	0.53/0.305	3.20 +0.025	3.10 +0.025	4.00	5.40	6.80	0.40	0.15
5.33 ±0.13	0.56/0.250	0.71/0.400	4.90 +0.050	4.75 +0.050	6.00	7.80	9.50	0.60	0.20
7.00 ±0.15	0.70/0.350	0.95/0.600	6.45 +0.050	6.20 +0.050	8.00	10.50	10.50	0.60	0.20

Nomenclature

Part No	QUA	00106	0125	T571
	Seal profile	Lobe Ring ID x 10	Cross Section x 10	Seal Material Code

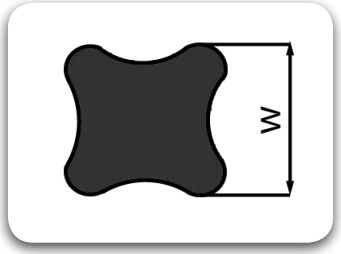

Material Details

Lobe Ring Material	Material Code
NBR 70	T571
NBR 90	T591
FKM 70	T675
FKM 90	T691
EPDM 70	T771
HNBR 70	T532

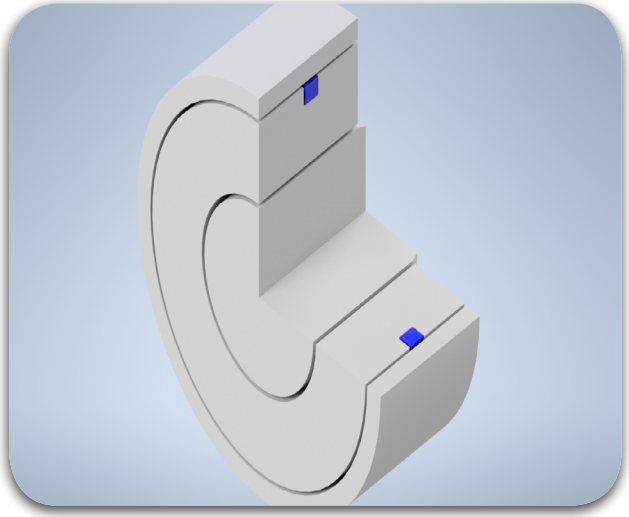

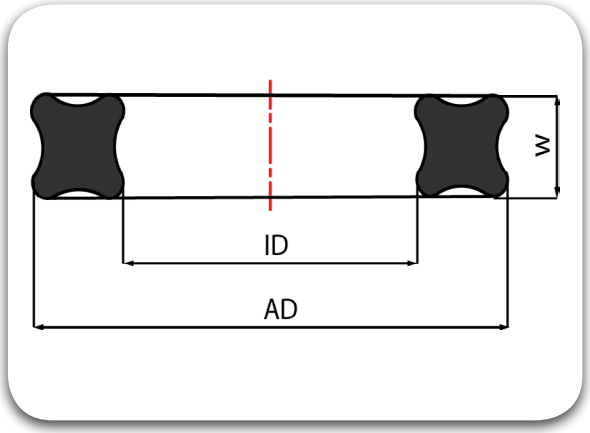

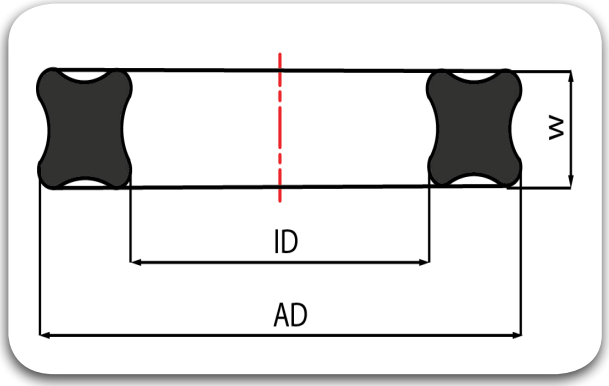

Sl. No.	Inside Dia. "ID"	Tol. ±	Cross Section "W"	Outside Dia. "AD"	TRIADA® Part Numbers
1.00	0.74	0.10	1.02 ± 0.08	2.78	QUA00074 0102 T571
2.00	1.06	0.10	1.25 ± 0.08	3.56	QUA00106 0125 T571
3.00	1.42	0.10	1.52 ± 0.08	4.46	QUA00142 0152 T571
4.00	**1.78**	**0.13**	**1.02 ± 0.08**	**3.82**	**QUA00178 0102 T571**
5.00	1.78	0.13	1.78 ± 0.08	5.34	QUA00178 0178 T571
6.00	2.00	0.13	1.50 ± 0.08	5.00	QUA00200 0178 T571
7.00	2.57	0.13	1.78 ± 0.08	6.13	QUA00257 0178 T571
8.00	2.90	0.13	1.78 ± 0.08	6.46	QUA00290 0178 T571
9.00	3.68	0.13	1.78 ± 0.08	7.24	QUA00368 0178 T571
10.00	4.47	0.13	1.78 ± 0.08	8.03	QUA00447 0178 T571
11.00	5.28	0.13	1.78 ± 0.08	8.84	QUA00528 0178 T571
12.00	6.07	0.13	1.78 ± 0.08	9.63	QUA00607 0178 T571
13.00	7.65	0.13	1.78 ± 0.08	11.21	QUA00765 0178 T571
14.00	**8.20**	**0.13**	**1.78 ± 0.08**	**11.76**	**QUA00820 0178 T571**
15.00	9.25	0.13	1.78 ± 0.08	12.81	QUA00925 0178 T571
16.00	10.82	0.13	1.78 ± 0.08	14.38	QUA01082 0178 T571
17.00	12.42	0.13	1.78 ± 0.08	15.98	QUA01242 0178 T571
18.00	14.00	0.18	1.78 ± 0.08	17.56	QUA01400 0178 T571
19.00	15.60	0.23	1.78 ± 0.08	19.16	QUA01560 0178 T571
20.00	17.17	0.23	1.78 ± 0.08	20.73	QUA01717 0178 T571

Sl. No.	Inside Dia. "ID"	Tol. ±	Cross Section "W"	Outside Dia. "AD"	TRIADA® Part Numbers
21.00	18.77	0.23	1.78 ± 0.08	22.30	QUA01877 0178 T571
22.00	20.35	0.23	1.78 ± 0.08	23.91	QUA02035 0178 T571
23.00	21.95	0.23	1.78 ± 0.08	25.51	QUA02195 0178 T571
24.00	23.52	0.23	1.78 ± 0.08	27.08	QUA02352 0178 T571
25.00	25.12	0.25	1.78 ± 0.08	28.68	QUA02512 0178 T571
26.00	26.70	0.25	1.78 ± 0.08	30.26	QUA02670 0178 T571
27.00	28.30	0.25	1.78 ± 0.08	31.86	QUA02830 0178 T571
28.00	29.87	0.28	1.78 ± 0.08	33.43	QUA02987 0178 T571
29.00	31.47	0.28	1.78 ± 0.08	35.03	QUA03147 0178 T571
30.00	33.05	0.28	1.78 ± 0.08	36.61	QUA03305 0178 T571
31.00	34.65	0.33	1.78 ± 0.08	38.21	QUA03465 0178 T571
32.00	37.82	0.33	1.78 ± 0.08	41.38	QUA03782 0178 T571
33.00	41.00	0.33	1.78 ± 0.08	44.56	QUA04100 0178 T571
34.00	44.17	0.38	1.78 ± 0.08	47.73	QUA04417 0178 T571
35.00	47.35	0.38	1.78 ± 0.08	50.91	QUA04735 0178 T571
36.00	50.52	0.46	1.78 ± 0.08	54.08	QUA05052 0178 T571
37.00	53.70	0.46	1.78 ± 0.08	57.26	QUA05370 0178 T571
38.00	56.87	0.46	1.78 ± 0.08	60.43	QUA05687 0178 T571
39.00	60.05	0.46	1.78 ± 0.08	63.61	QUA06005 0178 T571
40.00	63.22	0.46	1.78 ± 0.08	66.78	QUA06322 0178 T571

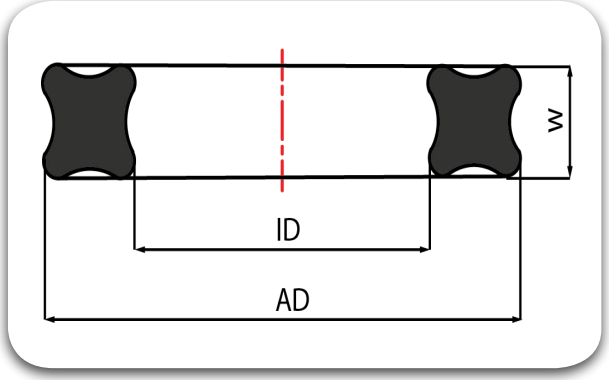

Sl. No.	Inside Dia. "ID"	Tol. ±	Cross Section "W"	Outside Dia. "AD"	TRIADA® Part Numbers
41.00	66.40	0.51	1.78 ± 0.08	69.96	QUA06640 0178 T571
42.00	69.57	0.51	1.78 ± 0.08	73.13	QUA06957 0178 T571
43.00	72.75	0.51	1.78 ± 0.08	76.31	QUA07275 0178 T571
44.00	75.92	0.61	1.78 ± 0.08	79.48	QUA07592 0178 T571
45.00	82.27	0.61	1.78 ± 0.08	85.83	QUA08227 0178 T571
46.00	88.62	0.61	1.78 ± 0.08	92.18	QUA08862 0178 T571
47.00	94.97	0.69	1.78 ± 0.08	98.53	QUA09497 0178 T571
48.00	101.32	0.69	1.78 ± 0.08	104.88	QUA10132 0178 T571
49.00	107.67	0.76	1.78 ± 0.08	111.23	QUA10767 0178 T571
50.00	114.02	0.76	1.78 ± 0.08	117.58	QUA11402 0178 T571
51.00	120.37	0.76	1.78 ± 0.08	123.98	QUA12037 0178 T571
52.00	126.72	0.94	1.78 ± 0.08	130.28	QUA12672 0178 T571
53.00	133.07	0.94	1.78 ± 0.08	136.63	QUA13307 0178 T571
54.00	1.24	0.10	2.62 ± 0.08	6.48	QUA00124 0262 T571
55.00	**2.06**	**0.13**	**2.62 ± 0.08**	**7.30**	**QUA00206 0262 T571**
56.00	**2.84**	**0.13**	**2.62 ± 0.08**	**8.08**	**QUA00284 0262 T571**
57.00	3.63	0.13	2.62 ± 0.08	8.87	QUA00363 0262 T571
58.00	4.42	0.13	2.62 ± 0.08	9.66	QUA00442 0262 T571
59.00	5.23	0.13	2.62 ± 0.08	10.47	QUA00523 0262 T571
60.00	6.02	0.13	2.62 ± 0.08	11.26	QUA00602 0262 T571

Sl. No.	Inside Dia. "ID"	Tol. ±	Cross Section "W"	Outside Dia. "AD"	TRIADA® Part Numbers
61.00	7.59	0.13	2.62 ± 0.08	12.83	QUA00759 0262 T571
62.00	9.20	0.13	2.62 ± 0.08	14.44	QUA00920 0262 T571
63.00	**10.20**	**0.13**	**2.62 ± 0.08**	**15.44**	**QUA01020 0262 T571**
64.00	10.77	0.13	2.62 ± 0.08	16.01	QUA01077 0262 T571
65.00	12.37	0.13	2.62 ± 0.08	17.61	QUA01237 0262 T571
66.00	13.95	0.18	2.62 ± 0.08	19.19	QUA01395 0262 T571
67.00	**14.70**	**0.23**	**2.62 ± 0.08**	**19.94**	**QUA01470 0262 T571**
68.00	**14.80**	**0.23**	**2.62 ± 0.08**	**19.80**	**QUA01480 0262 T571**
69.00	15.55	0.23	2.62 ± 0.08	20.79	QUA01555 0262 T571
70.00	**16.20**	**0.23**	**2.62 ± 0.08**	**21.44**	**QUA01620 0262 T571**
71.00	17.12	0.23	2.62 ± 0.08	22.36	QUA01712 0262 T571
72.00	18.72	0.23	2.62 ± 0.08	23.96	QUA01872 0262 T571
73.00	20.29	0.25	2.62 ± 0.08	25.53	QUA02029 0262 T571
74.00	21.89	0.25	2.62 ± 0.08	27.13	QUA02189 0262 T571
75.00	23.47	0.25	2.62 ± 0.08	28.71	QUA02347 0262 T571
76.00	25.07	0.25	2.62 ± 0.08	30.31	QUA02507 0262 T571
77.00	26.64	0.25	2.62 ± 0.08	31.88	QUA02664 0262 T571
78.00	28.24	0.25	2.62 ± 0.08	33.48	QUA02824 0262 T571
79.00	29.82	0.30	2.62 ± 0.08	35.06	QUA02982 0262 T571
80.00	31.42	0.30	2.62 ± 0.08	36.66	QUA03142 0262 T571

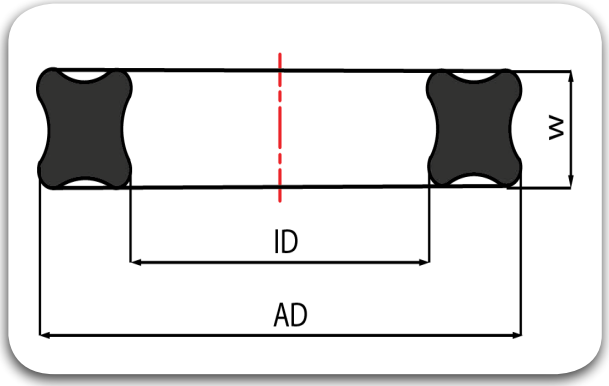

Sl. No.	Inside Dia. "ID"	Tol. ±	Cross Section "W"	Outside Dia. "AD"	TRIADA® Part Numbers
81.00	32.99	0.30	2.62 ± 0.08	38.23	QUA03299 0262 T571
82.00	34.59	0.30	2.62 ± 0.08	39.83	QUA03459 0262 T571
83.00	36.17	0.30	2.62 ± 0.08	41.41	QUA03617 0262 T571
84.00	37.77	0.30	2.62 ± 0.08	43.01	QUA03777 0262 T571
85.00	39.34	0.38	2.62 ± 0.08	44.58	QUA03934 0262 T571
86.00	40.95	0.38	2.62 ± 0.08	46.19	QUA04095 0262 T571
87.00	42.52	0.38	2.62 ± 0.08	47.76	QUA04252 0262 T571
88.00	44.12	0.38	2.62 ± 0.08	49.36	QUA04412 0262 T571
89.00	45.69	0.38	2.62 ± 0.08	50.93	QUA04569 0262 T571
90.00	47.29	0.38	2.62 ± 0.08	52.53	QUA04729 0262 T571
91.00	48.90	0.43	2.62 ± 0.08	54.14	QUA04890 0262 T571
92.00	50.47	0.43	2.62 ± 0.08	55.71	QUA05047 0262 T571
93.00	52.07	0.43	2.62 ± 0.08	57.31	QUA05207 0262 T571
94.00	53.84	0.43	2.62 ± 0.08	58.88	QUA05384 0262 T571
95.00	55.25	0.43	2.62 ± 0.08	60.49	QUA05525 0262 T571
96.00	56.82	0.43	2.62 ± 0.08	62.06	QUA05682 0262 T571
97.00	58.42	0.51	2.62 ± 0.08	63.66	QUA05842 0262 T571
98.00	59.99	0.51	2.62 ± 0.08	65.23	QUA05999 0262 T571
99.00	61.60	0.51	2.62 ± 0.08	66.84	QUA06160 0262 T571
100.00	63.17	0.51	2.62 ± 0.08	68.41	QUA06317 0262 T571

Sl. No.	Inside Dia. "ID"	Tol. ±	Cross Section "W"	Outside Dia. "AD"	TRIADA® Part Numbers
101.00	64.77	0.51	2.62 ± 0.08	70.01	QUA06477 0262 T571
102.00	66.34	0.51	2.62 ± 0.08	71.58	QUA06634 0262 T571
103.00	67.94	0.56	2.62 ± 0.08	73.18	QUA06794 0262 T571
104.00	69.52	0.56	2.62 ± 0.08	74.76	QUA06952 0262 T571
105.00	71.12	0.56	2.62 ± 0.08	76.36	QUA07112 0262 T571
106.00	72.69	0.56	2.62 ± 0.08	77.93	QUA07269 0262 T571
107.00	75.87	0.61	2.62 ± 0.08	81.11	QUA07587 0262 T571
108.00	82.22	0.61	2.62 ± 0.08	87.46	QUA08222 0262 T571
109.00	88.57	0.61	2.62 ± 0.08	93.81	QUA08857 0262 T571
110.00	94.92	0.71	2.62 ± 0.08	100.16	QUA09492 0262 T571
111.00	101.27	0.71	2.62 ± 0.08	106.51	QUA10127 0262 T571
112.00	107.62	0.76	2.62 ± 0.08	112.86	QUA10762 0262 T571
113.00	113.97	0.76	2.62 ± 0.08	119.21	QUA11397 0262 T571
114.00	120.32	0.76	2.62 ± 0.08	125.56	QUA12032 0262 T571
115.00	126.67	0.89	2.62 ± 0.08	131.91	QUA12667 0262 T571
116.00	133.02	0.89	2.62 ± 0.08	138.26	QUA13302 0262 T571
117.00	139.37	0.89	2.62 ± 0.08	144.61	QUA13937 0262 T571
118.00	145.72	0.89	2.62 ± 0.08	150.96	QUA14572 0262 T571
119.00	152.07	0.89	2.62 ± 0.08	157.31	QUA15207 0262 T571
120.00	158.42	1.02	2.62 ± 0.08	163.66	QUA15842 0262 T571

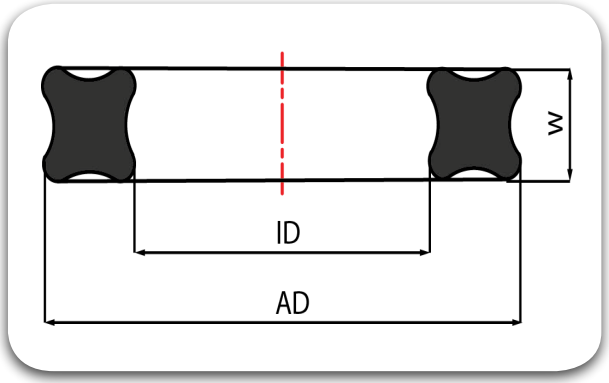

Sl. No.	Inside Dia. "ID"	Tol. ±	Cross Section "W"	Outside Dia. "AD"	TRIADA® Part Numbers
121.00	164.77	1.02	2.62 ± 0.08	170.01	QUA16477 0262 T571
122.00	171.11	1.02	2.62 ± 0.08	176.35	QUA17111 0262 T571
123.00	177.47	1.02	2.62 ± 0.08	182.71	QUA17747 0262 T571
124.00	183.82	1.14	2.62 ± 0.08	189.06	QUA18382 0262 T571
125.00	190.17	1.14	2.62 ± 0.08	195.41	QUA19017 0262 T571
126.00	196.52	1.14	2.62 ± 0.08	201.76	QUA19652 0262 T571
127.00	202.87	1.14	2.62 ± 0.08	208.11	QUA20287 0262 T571
128.00	209.22	1.27	2.62 ± 0.08	214.46	QUA20922 0262 T571
129.00	215.57	1.27	2.62 ± 0.08	220.81	QUA21557 0262 T571
130.00	221.92	1.27	2.62 ± 0.08	227.16	QUA22192 0262 T571
131.00	228.27	1.27	2.62 ± 0.08	233.51	QUA22827 0262 T571
132.00	234.62	1.40	2.62 ± 0.08	239.86	QUA23462 0262 T571
133.00	240.97	1.40	2.62 ± 0.08	246.21	QUA24097 0262 T571
134.00	247.32	1.40	2.62 ± 0.08	252.56	QUA24732 0262 T571
135.00	4.34	0.13	3.53 ± 0.10	11.40	QUA00434 0353 T571
136.00	5.94	0.13	3.53 ± 0.1	13.00	QUA00594 0353 T571
137.00	7.52	0.13	3.53 ± 0.1	14.58	QUA00752 0353 T571
138.00	9.12	0.13	3.53 ± 0.1	16.18	QUA00912 0353 T571
139.00	10.69	0.13	3.53 ± 0.1	17.75	QUA01069 0353 T571
140.00	12.29	0.13	3.53 ± 0.1	19.35	QUA01229 0353 T571

Sl. No.	Inside Dia. "ID"	Tol. ±	Cross Section "W"	Outside Dia. "AD"	TRIADA® Part Numbers
141.00	13.87	0.18	3.53 ± 0.1	20.93	QUA01387 0353 T571
142.00	15.47	0.23	3.53 ± 0.1	22.53	QUA01547 0353 T571
143.00	17.04	0.23	3.53 ± 0.1	24.10	QUA01704 0353 T571
144.00	**18.20**	**0.25**	**3.53 ± 0.1**	**25.26**	**QUA01820 0353 T571**
145.00	18.66	0.25	3.53 ± 0.1	25.72	QUA01866 0353 T571
146.00	20.22	0.25	3.53 ± 0.1	27.28	QUA02022 0353 T571
147.00	21.82	0.25	3.53 ± 0.1	28.88	QUA02182 0353 T571
148.00	23.40	0.25	3.53 ± 0.1	30.46	QUA02340 0353 T571
149.00	25.00	0.25	3.53 ± 0.1	32.06	QUA02500 0353 T571
150.00	26.58	0.25	3.53 ± 0.1	33.64	QUA02658 0353 T571
151.00	28.17	0.30	3.53 ± 0.1	35.23	QUA02817 0353 T571
152.00	29.75	0.30	3.53 ± 0.1	36.81	QUA02975 0353 T571
153.00	31.35	0.30	3.53 ± 0.1	38.41	QUA03135 0353 T571
154.00	32.92	0.30	3.53 ± 0.1	39.98	QUA03292 0353 T571
155.00	34.52	0.30	3.53 ± 0.1	41.58	QUA03452 0353 T571
156.00	36.09	0.30	3.53 ± 0.1	43.15	QUA03609 0353 T571
157.00	37.70	0.38	3.53 ± 0.1	44.76	QUA03770 0353 T571
158.00	40.87	0.38	3.53 ± 0.1	47.93	QUA04087 0353 T571
159.00	44.05	0.38	3.53 ± 0.1	51.11	QUA04405 0353 T571
160.00	47.22	0.46	3.53 ± 0.1	54.28	QUA04722 0353 T571

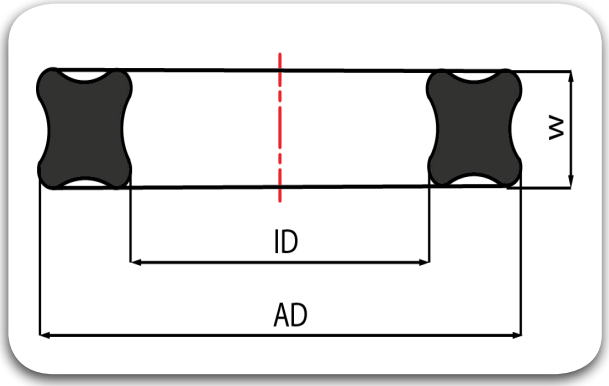

Sl. No.	Inside Dia. "ID"	Tol. ±	Cross Section "W"	Outside Dia. "AD"	TRIADA® Part Numbers
161.00	50.40	0.46	3.53 ± 0.1	57.46	QUA05040 0353 T571
162.00	53.57	0.46	3.53 ± 0.1	60.63	QUA05357 0353 T571
163.00	56.75	0.51	3.53 ± 0.1	63.81	QUA05675 0353 T571
164.00	59.92	0.51	3.53 ± 0.1	66.98	QUA05992 0353 T571
165.00	63.10	0.51	3.53 ± 0.1	70.16	QUA06310 0353 T571
166.00	66.27	0.51	3.53 ± 0.1	73.33	QUA06627 0353 T571
167.00	69.45	0.61	3.53 ± 0.1	76.51	QUA06945 0353 T571
168.00	72.62	0.61	3.53 ± 0.1	79.68	QUA07262 0353 T571
169.00	75.80	0.61	3.53 ± 0.1	82.86	QUA07580 0353 T571
170.00	78.97	0.61	3.53 ± 0.1	86.03	QUA07897 0353 T571
171.00	82.15	0.61	3.53 ± 0.1	89.21	QUA08215 0353 T571
172.00	85.32	0.61	3.53 ± 0.1	92.38	QUA08532 0353 T571
173.00	88.50	0.61	3.53 ± 0.1	95.56	QUA08850 0353 T571
174.00	91.67	0.71	3.53 ± 0.1	98.73	QUA09167 0353 T571
175.00	94.85	0.71	3.53 ± 0.1	101.91	QUA09485 0353 T571
176.00	98.02	0.71	3.53 ± 0.1	105.08	QUA09802 0353 T571
177.00	101.20	0.71	3.53 ± 0.1	108.26	QUA10120 0353 T571
178.00	104.37	0.71	3.53 ± 0.1	111.43	QUA10437 0353 T571
179.00	107.55	0.76	3.53 ± 0.1	114.61	QUA10755 0353 T571
180.00	110.72	0.76	3.53 ± 0.1	117.78	QUA11072 0353 T571

Sl. No.	Inside Dia. "ID"	Tol. ±	Cross Section "W"	Outside Dia. "AD"	TRIADA® Part Numbers
181.00	113.90	0.76	3.53 ± 0.1	120.96	QUA11390 0353 T571
182.00	117.07	0.76	3.53 ± 0.1	124.13	QUA11707 0353 T571
183.00	120.25	0.76	3.53 ± 0.1	127.31	QUA12025 0353 T571
184.00	123.42	0.84	3.53 ± 0.1	130.48	QUA12342 0353 T571
185.00	126.60	0.84	3.53 ± 0.1	133.66	QUA12660 0353 T571
186.00	129.77	0.84	3.53 ± 0.1	136.83	QUA12977 0353 T571
187.00	132.95	0.89	3.53 ± 0.1	140.01	QUA13295 0353 T571
188.00	136.12	0.89	3.53 ± 0.1	143.18	QUA13612 0353 T571
189.00	139.30	0.89	3.53 ± 0.1	146.36	QUA13930 0353 T571
190.00	142.47	0.89	3.53 ± 0.1	149.53	QUA14247 0353 T571
191.00	145.65	0.89	3.53 ± 0.1	152.71	QUA14565 0353 T571
192.00	148.82	0.89	3.53 ± 0.1	155.88	QUA14882 0353 T571
193.00	152.00	0.89	3.53 ± 0.1	159.06	QUA15200 0353 T571
194.00	158.35	1.02	3.53 ± 0.1	165.41	QUA15835 0353 T571
195.00	164.70	1.02	3.53 ± 0.1	171.76	QUA16470 0353 T571
196.00	171.05	1.02	3.53 ± 0.1	178.11	QUA17105 0353 T571
197.00	177.40	1.02	3.53 ± 0.1	184.46	QUA17740 0353 T571
198.00	183.75	1.14	3.53 ± 0.1	190.81	QUA18375 0353 T571
199.00	190.10	1.14	3.53 ± 0.1	197.16	QUA19010 0353 T571
200.00	196.45	1.14	3.53 ± 0.1	203.51	QUA19645 0353 T571

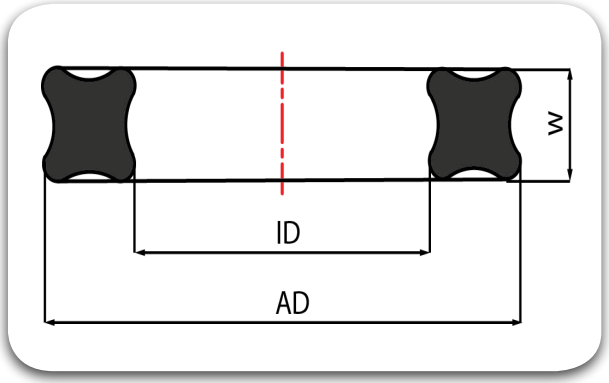

Sl. No.	Inside Dia. "ID"	Tol. ±	Cross Section "W"	Outside Dia. "AD"	TRIADA® Part Numbers
201.00	202.80	1.14	3.53 ± 0.1	209.86	QUA20280 0353 T571
202.00	209.15	1.27	3.53 ± 0.1	216.21	QUA20915 0353 T571
203.00	215.50	1.27	3.53 ± 0.1	222.56	QUA21550 0353 T571
204.00	221.85	1.27	3.53 ± 0.1	228.91	QUA22185 0353 T571
205.00	228.20	1.27	3.53 ± 0.1	235.26	QUA22820 0353 T571
206.00	234.55	1.40	3.53 ± 0.1	247.96	QUA23455 0353 T571
207.00	240.90	1.40	3.53 ± 0.1	241.61	QUA24090 0353 T571
208.00	247.25	1.40	3.53 ± 0.1	254.31	QUA24725 0353 T571
209.00	253.60	1.40	3.53 ± 0.1	260.66	QUA25360 0353 T571
210.00	266.29	1.40	3.53 ± 0.1	273.35	QUA26629 0353 T571
211.00	278.99	1.65	3.53 ± 0.1	286.05	QUA27899 0353 T571
212.00	291.69	1.65	3.53 ± 0.1	298.75	QUA29169 0353 T571
213.00	304.39	1.65	3.53 ± 0.1	311.45	QUA30439 0353 T571
214.00	329.79	1.65	3.53 ± 0.1	336.85	QUA32979 0353 T571
215.00	355.19	1.65	3.53 ± 0.1	362.25	QUA35519 0353 T571
216.00	380.59	1.65	3.53 ± 0.1	387.65	QUA38059 0353 T571
217.00	405.26	1.90	3.53 ± 0.1	412.32	QUA40526 0353 T571
218.00	430.66	2.16	3.53 ± 0.1	437.72	QUA43066 0353 T571
219.00	456.06	2.42	3.53 ± 0.1	463.12	QUA45606 0353 T571
220.00	10.46	0.13	5.33 ± 0.13	21.12	QUA01046 0533 T571

Sl. No.	Inside Dia. "ID"	Tol. ±	Cross Section "W"	Outside Dia. "AD"	TRIADA® Part Numbers
221.00	12.06	0.13	5.33 ± 0.13	22.72	QUA01206 0533 T571
222.00	13.64	0.18	5.33 ± 0.13	24.30	QUA01364 0533 T571
223.00	15.24	0.23	5.33 ± 0.13	25.90	QUA01524 0533 T571
224.00	16.81	0.23	5.33 ± 0.13	27.47	QUA01681 0533 T571
225.00	18.41	0.25	5.33 ± 0.13	29.07	QUA01841 0533 T571
226.00	19.99	0.25	5.33 ± 0.13	30.65	QUA01999 0533 T571
227.00	21.59	0.25	5.33 ± 0.13	32.25	QUA02159 0533 T571
228.00	23.16	0.25	5.33 ± 0.13	33.82	QUA02316 0533 T571
229.00	24.76	0.25	5.33 ± 0.13	35.42	QUA02476 0533 T571
230.00	26.34	0.25	5.33 ± 0.13	37.00	QUA02634 0533 T571
231.00	27.94	0.30	5.33 ± 0.13	38.60	QUA02794 0533 T571
232.00	29.51	0.30	5.33 ± 0.13	40.17	QUA02951 0533 T571
233.00	31.11	0.30	5.33 ± 0.13	41.77	QUA03111 0533 T571
234.00	32.69	0.30	5.33 ± 0.13	43.35	QUA03269 0533 T571
235.00	34.29	0.30	5.33 ± 0.13	45.00	QUA03429 0533 T571
236.00	37.46	0.38	5.33 ± 0.13	48.12	QUA03746 0533 T571
237.00	**39.20**	**0.38**	**5.33 ± 0.13**	**49.86**	**QUA03920 0533 T571**
238.00	40.64	0.38	5.33 ± 0.13	51.30	QUA04064 0533 T571
239.00	43.80	0.38	5.33 ± 0.13	54.46	QUA04380 0533 T571
240.00	**45.20**	**0.38**	**5.33 ± 0.13**	**55.85**	**QUA04520 0533 T571**

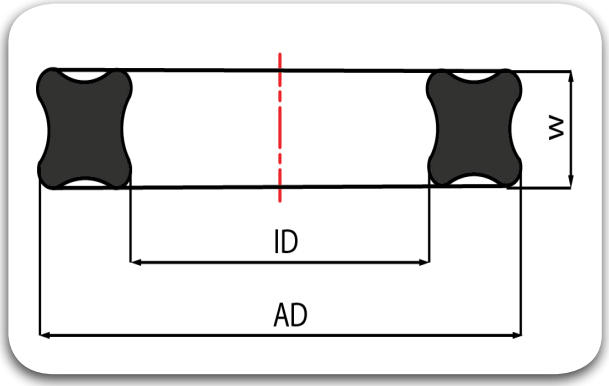

Sl. No.	Inside Dia. "ID"	Tol. ±	Cross Section "W"	Outside Dia. "AD"	TRIADA® Part Numbers
241.00	47.00	0.38	5.33 ± 0.13	57.66	QUA04700 0533 T571
242.00	50.16	0.46	5.33 ± 0.13	60.82	QUA05016 0533 T571
243.00	53.35	0.46	5.33 ± 0.13	64.01	QUA05335 0533 T571
244.00	56.50	0.46	5.33 ± 0.13	67.16	QUA05650 0533 T571
245.00	59.70	0.46	5.33 ± 0.13	70.36	QUA05970 0533 T571
246.00	62.86	0.51	5.33 ± 0.13	73.52	QUA06286 0533 T571
247.00	66.05	0.51	5.33 ± 0.13	76.71	QUA06605 0533 T571
248.00	69.20	0.51	5.33 ± 0.13	79.86	QUA06920 0533 T571
249.00	72.40	0.51	5.33 ± 0.13	83.06	QUA07240 0533 T571
250.00	75.56	0.61	5.33 ± 0.13	86.22	QUA07556 0533 T571
251.00	78.75	0.61	5.33 ± 0.13	89.41	QUA07875 0533 T571
252.00	81.90	0.61	5.33 ± 0.13	92.56	QUA08190 0533 T571
253.00	85.10	0.61	5.33 ± 0.13	95.76	QUA08510 0533 T571
254.00	88.26	0.61	5.33 ± 0.13	98.92	QUA08826 0533 T571
255.00	91.45	0.71	5.33 ± 0.13	102.11	QUA09145 0533 T571
256.00	94.60	0.71	5.33 ± 0.13	105.26	QUA09460 0533 T571
257.00	97.80	0.71	5.33 ± 0.13	108.46	QUA09780 0533 T571
258.00	100.96	0.71	5.33 ± 0.13	111.62	QUA10096 0533 T571
259.00	104.15	0.71	5.33 ± 0.13	114.81	QUA10415 0533 T571
260.00	107.30	0.76	5.33 ± 0.13	117.96	QUA10730 0533 T571

Sl. No.	Inside Dia. "ID"	Tol. ±	Cross Section "W"	Outside Dia. "AD"	TRIADA® Part Numbers
261.00	110.50	0.76	5.33 ± 0.13	121.16	QUA11050 0533 T571
262.00	113.66	0.76	5.33 ± 0.13	124.32	QUA11366 0533 T571
263.00	116.84	0.76	5.33 ± 0.13	127.50	QUA11684 0533 T571
264.00	120.02	0.76	5.33 ± 0.13	130.68	QUA12002 0533 T571
265.00	123.19	0.76	5.33 ± 0.13	133.85	QUA12319 0533 T571
266.00	126.37	0.76	5.33 ± 0.13	137.03	QUA12637 0533 T571
267.00	129.54	0.94	5.33 ± 0.13	140.20	QUA12954 0533 T571
268.00	132.72	0.94	5.33 ± 0.13	143.38	QUA13272 0533 T571
269.00	135.89	0.94	5.33 ± 0.13	146.55	QUA13589 0533 T571
270.00	139.06	0.94	5.33 ± 0.13	149.72	QUA13906 0533 T571
271.00	142.24	0.94	5.33 ± 0.13	152.90	QUA14224 0533 T571
272.00	145.42	0.94	5.33 ± 0.13	156.08	QUA14542 0533 T571
273.00	148.49	0.94	5.33 ± 0.13	159.15	QUA14849 0533 T571
274.00	151.79	0.94	5.33 ± 0.13	162.42	QUA15179 0533 T571
275.00	158.12	1.02	5.33 ± 0.13	168.78	QUA15812 0533 T571
276.00	164.47	1.02	5.33 ± 0.13	175.13	QUA16447 0533 T571
277.00	170.81	1.02	5.33 ± 0.13	181.47	QUA17081 0533 T571
278.00	177.17	1.02	5.33 ± 0.13	187.83	QUA17717 0533 T571
279.00	183.52	1.14	5.33 ± 0.13	194.18	QUA18352 0533 T571
280.00	189.87	1.14	5.33 ± 0.13	200.53	QUA18987 0533 T571

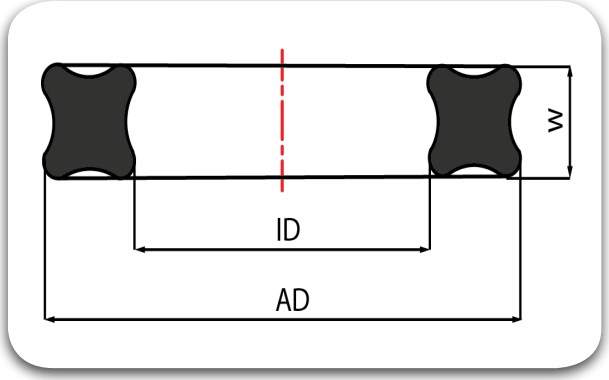

Sl. No.	Inside Dia. "ID"	Tol. ±	Cross Section "W"	Outside Dia. "AD"	TRIADA® Part Numbers
281.00	196.22	1.14	5.33 ± 0.13	206.88	QUA19622 0533 T571
282.00	202.57	1.14	5.33 ± 0.13	213.23	QUA20257 0533 T571
283.00	208.92	1.30	5.33 ± 0.13	219.58	QUA20892 0533 T571
284.00	215.27	1.30	5.33 ± 0.13	225.93	QUA21527 0533 T571
285.00	221.62	1.30	5.33 ± 0.13	232.28	QUA22162 0533 T571
286.00	227.97	1.30	5.33 ± 0.13	238.63	QUA22797 0533 T571
287.00	234.32	1.40	5.33 ± 0.13	244.98	QUA23432 0533 T571
288.00	240.67	1.40	5.33 ± 0.13	251.33	QUA24067 0533 T571
289.00	247.02	1.40	5.33 ± 0.13	257.68	QUA24702 0533 T571
290.00	253.37	1.40	5.33 ± 0.13	264.03	QUA25337 0533 T571
291.00	266.07	1.52	5.33 ± 0.13	276.73	QUA26607 0533 T571
292.00	278.77	1.52	5.33 ± 0.13	289.43	QUA27877 0533 T571
293.00	291.47	1.65	5.33 ± 0.13	302.13	QUA29147 0533 T571
294.00	304.17	1.65	5.33 ± 0.13	314.83	QUA30417 0533 T571
295.00	329.57	1.65	5.33 ± 0.13	340.23	QUA32957 0533 T571
296.00	354.97	1.78	5.33 ± 0.13	365.63	QUA35497 0533 T571
297.00	380.37	1.78	5.33 ± 0.13	391.03	QUA38037 0533 T571
298.00	405.26	1.90	5.33 ± 0.13	415.92	QUA40526 0533 T571
299.00	430.65	2.03	5.33 ± 0.13	441.31	QUA43065 0533 T571
300.00	456.06	2.15	5.33 ± 0.13	466.72	QUA45606 0533 T571

Sl. No.	Inside Dia. "ID"	Tol. ±	Cross Section "W"	Outside Dia. "AD"	TRIADA® Part Numbers
301.00	481.38	2.25	5.33 ± 0.13	492.04	QUA48138 0533 T571
302.00	506.78	2.41	5.33 ± 0.13	517.44	QUA50678 0533 T571
303.00	532.18	2.41	5.33 ± 0.13	542.84	QUA53218 0533 T571
304.00	557.58	2.55	5.33 ± 0.13	568.24	QUA55758 0533 T571
305.00	582.68	2.65	5.33 ± 0.13	593.34	QUA58268 0533 T571
306.00	608.08	2.80	5.33 ± 0.13	618.74	QUA60808 0533 T571
307.00	633.48	2.90	5.33 ± 0.13	644.54	QUA633.48 0533 T571
308.00	658.88	3.05	5.33 ± 0.13	669.54	QUA65888 0533 T571
309.00	113.66	0.84	7.00 ± 0.15	127.66	QUA11366 0700 T571
310.00	116.85	0.84	7.00 ± 0.16	130.85	QUA11685 0700 T571
311.00	120.00	0.84	7.00 ± 0.17	134.00	QUA12000 0700 T571
312.00	123.20	0.84	7.00 ± 0.18	137.20	QUA12320 0700 T571
313.00	126.36	0.94	7.00 ± 0.19	140.36	QUA12636 0700 T571
314.00	129.55	0.94	7.00 ± 0.20	143.55	QUA12955 0700 T571
315.00	132.70	0.94	7.00 ± 0.21	146.70	QUA13270 0700 T571
316.00	135.90	0.94	7.00 ± 0.22	149.90	QUA13590 0700 T571
317.00	139.06	0.94	7.00 ± 0.23	153.06	QUA13906 0700 T571
318.00	142.25	0.94	7.00 ± 0.24	156.25	QUA14225 0700 T571
319.00	145.40	0.94	7.00 ± 0.25	159.40	QUA14540 0700 T571
320.00	148.60	0.94	7.00 ± 0.26	162.60	QUA14860 0700 T571

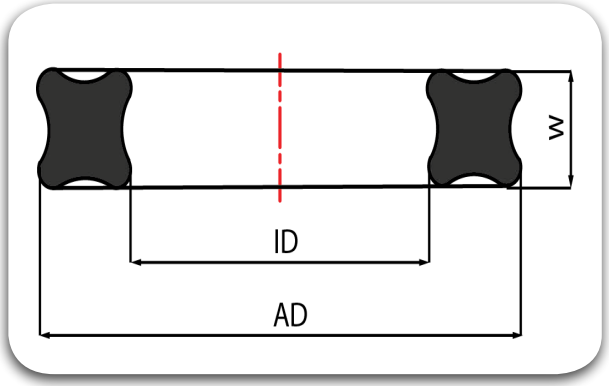

Sl. No.	Inside Dia. "ID"	Tol. ±	Cross Section "W"	Outside Dia. "AD"	TRIADA® Part Numbers
321.00	151.76	0.94	7.00 ± 0.27	165.76	QUA15176 0700 T571
322.00	158.10	1.02	7.00 ± 0.28	172.10	QUA15810 0700 T571
323.00	**160.50**	**1.02**	**7.00 ± 0.29**	**174.50**	**QUA16050 0700 T571**
324.00	164.46	1.02	7.00 ± 0.30	178.46	QUA16446 0700 T571
325.00	170.81	1.02	7.00 ± 0.31	184.81	QUA17081 0700 T571
326.00	177.16	1.02	7.00 ± 0.32	191.16	QUA17716 0700 T571
327.00	183.50	1.14	7.00 ± 0.33	197.50	QUA18350 0700 T571
328.00	189.86	1.14	7.00 ± 0.34	203.86	QUA18986 0700 T571
329.00	196.20	1.14	7.00 ± 0.35	210.20	QUA19620 0700 T571
330.00	202.56	1.14	7.00 ± 0.36	216.56	QUA20256 0700 T571
331.00	215.30	1.40	7.00 ± 0.37	229.30	QUA21530 0700 T571
332.00	228.00	1.40	7.00 ± 0.38	242.00	QUA22800 0700 T571
333.00	240.70	1.40	7.00 ± 0.39	254.70	QUA24070 0700 T571
334.00	253.40	1.40	7.00 ± 0.40	267.40	QUA25340 0700 T571
335.00	266.10	1.52	7.00 ± 0.41	280.10	QUA26610 0700 T571
336.00	278.80	1.52	7.00 ± 0.42	292.80	QUA27880 0700 T571
337.00	291.50	1.52	7.00 ± 0.43	305.50	QUA29150 0700 T571
338.00	304.20	1.52	7.00 ± 0.44	318.20	QUA30420 0700 T571
339.00	316.90	1.52	7.00 ± 0.45	330.90	QUA31690 0700 T571
340.00	329.60	1.52	7.00 ± 0.46	343.60	QUA32960 0700 T571

Sl. No.	Inside Dia. "ID"	Tol. ±	Cross Section "W"	Outside Dia. "AD"	TRIADA® Part Numbers
341.00	342.30	1.78	7.00 ± 0.47	356.30	QUA34230 0700 T571
342.00	355.00	1.78	7.00 ± 0.48	369.00	QUA35500 0700 T571
343.00	367.70	1.78	7.00 ± 0.49	381.70	QUA36770 0700 T571
344.00	380.40	1.78	7.00 ± 0.50	394.40	QUA38040 0700 T571
345.00	393.10	1.78	7.00 ± 0.51	407.10	QUA39310 0700 T571
346.00	405.26	1.90	7.00 ± 0.52	419.26	QUA40526 0700 T571
347.00	417.96	1.90	7.00 ± 0.53	431.96	QUA41796 0700 T571
348.00	430.65	2.05	7.00 ± 0.54	444.96	QUA43065 0700 T571
349.00	443.36	2.15	7.00 ± 0.55	457.36	QUA44336 0700 T571
350.00	456.06	2.15	7.00 ± 0.56	470.06	QUA45606 0700 T571
351.00	468.76	2.15	7.00 ± 0.57	482.76	QUA46876 0700 T571
352.00	481.46	2.29	7.00 ± 0.58	495.46	QUA48146 0700 T571
353.00	494.16	2.29	7.00 ± 0.59	508.16	QUA49416 0700 T571
354.00	506.86	2.41	7.00 ± 0.60	520.86	QUA50686 0700 T571
355.00	532.26	2.41	7.00 ± 0.61	546.26	QUA53226 0700 T571
356.00	557.66	2.55	7.00 ± 0.62	571.66	QUA55766 0700 T571
357.00	562.68	2.65	7.00 ± 0.63	596.68	QUA56268 0700 T571
358.00	608.08	2.80	7.00 ± 0.64	622.08	QUA60808 0700 T571
359.00	633.48	2.90	7.00 ± 0.65	647.48	QUA63348 0700 T571
360.00	658.87	3.05	7.00 ± 0.66	672.87	QUA65887 0700 T571

Static Seals

OME

TRIADA
TECHNOLOGIES

#Sealing**Excellence**

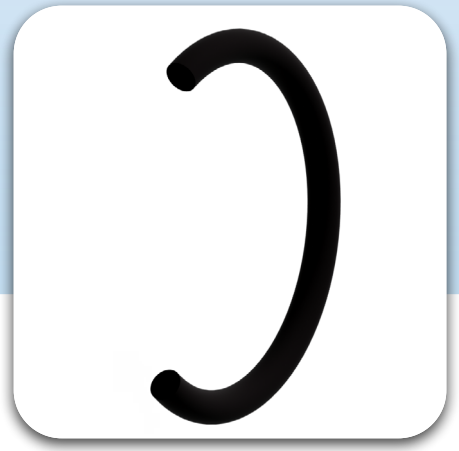
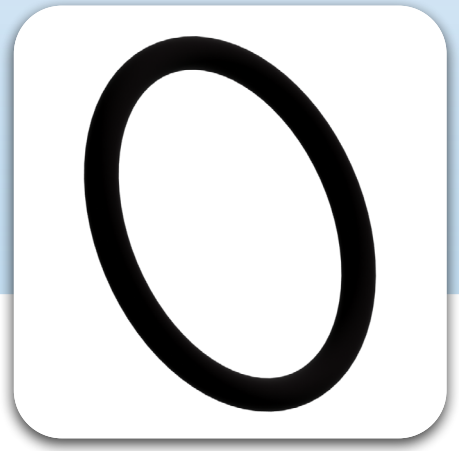

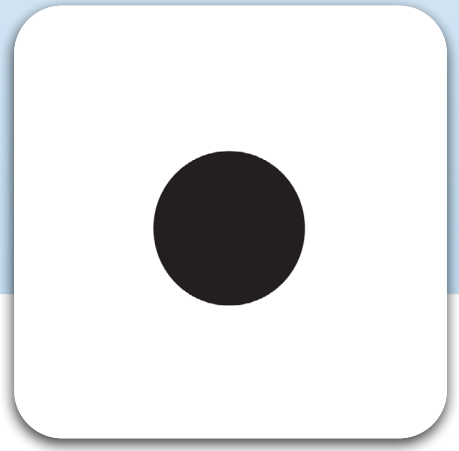

Description

An O-ring is a torus or doughnut-shaped ring, generally moulded from an elastomer. An O-Ring is defined by its inside diameter (ID) and Cross section (W). The O-Ring is used as a Dynamic or Static Seal, usually installed in a rectangular machined groove.

Mode of Action

O-Rings are Pressure energised, Double-acting sealing elements. The radial or axial sealing forces depend upon the system pressure. The result is an increase in the compression of the seal as the pressure rises.

Advantages

When compared with other seals, the O-Ring has many advantages to offer. The most important ones are as follows:

- The Seal is single as well as double-acting
- The simple construction means no problems in manufacturing of the groove
- False installation is impossible because of the symmetrical cross section
- Simple groove design
- Universal applicability
- Economical

Tolerances

O-Rings may be manufactured with very close tolerances. The permissible tolerances are standardized in DIN 3771/1 and ISO 3601/1 (up to an O-Ring Cross-section of 7.00mm and inner dia. of 670mm) The Tolerance specified in table 1.1 apply only to the O-Rings made of Nitrile Butadiene Rubber (NBR) with a hardness of 70 Shores A. with other elastomer qualities and hardness, deviations as compared with the values in the table may occur to the differing shrinkage behaviour.

Material Details

Lobe Ring Material	Material Code
NBR 70	T571
NBR 90	T591
FKM 70	T671
FKM 90	T691
EPDM 70	T771
HNBR 70	T532

Nomenclature

Part No	OME	00106	0125	T571
	Seal profile	O- Ring ID x 10	C/S x 10	Seal Material Code

Cross-section "W" (mm)	Tolerance (mm) ±
Upto 1.80	0.08
1.80 - 2.65	0.08
2.65 - 3.55	0.10
3.55 - 5.33	0.13
5.33 - 7.00	0.15
7.00 - 8.00	0.18
8.00 - 10.00	0.21
10.00 - 12.00	0.25
12.00 - 16.00	0.28

Inside Diameter I.D (mm)	Tolerance (mm) ±
Upto 2.50	0.13
2.50 - 6.30	0.14
6.30 - 10.00	0.16
10.00 - 18.00	0.18
18.00 - 30.00	0.22
30.00 - 50.00	0.31
50.00 - 80.00	0.47
80.00 - 100.00	0.71
100.00 - 120.00	0.87

Inside Diameter I.D (mm)	Tolerance (mm) ±
120.00 - 150.00	1.00
150.00 - 180.00	1.24
180.00 - 250.00	1.44
250.00 - 300.00	1.93
300.00 - 350.00	2.25
350.00 - 400.00	2.56
400.00 - 450.00	2.91
500.00 - 650.00	3.54
650.00 - 800.00	4.46

Groove Assembly - Bore

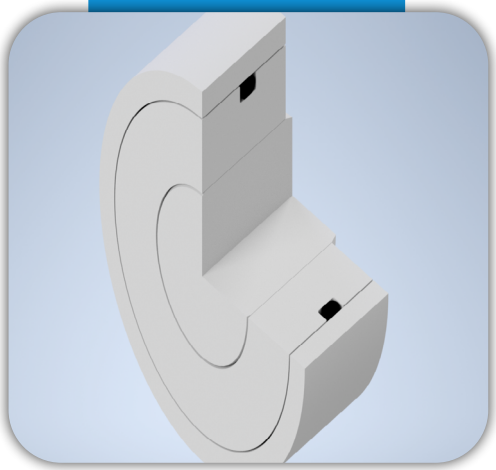

Groove Assembly - ROD



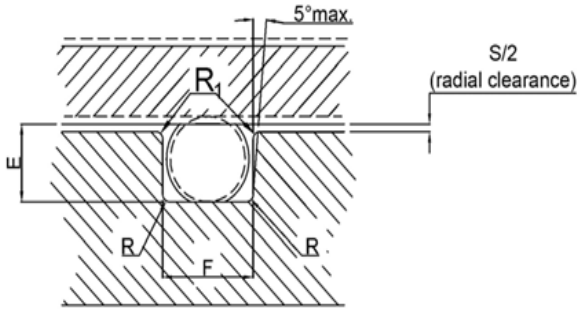

Gland Design

Straight sided grooves are best to prevent extrusion or nibbling. 5º Sloping sides are easier to machine and are suitable for low pressures. Finish with no burrs, nicks, or scratches. The groove volume is 25% larger than that of the respective O-Ring. It takes into consideration a possible volume change of the O-Ring due to Thermal expansion or swell.

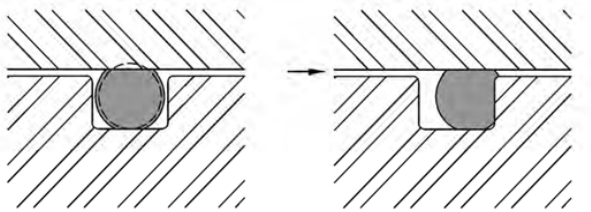

Figure 1-1

Figure 1-2

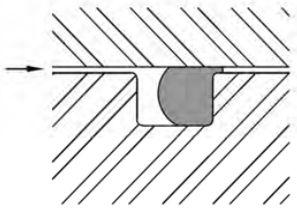

Figure 1-3

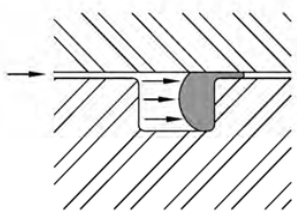

Figure 1-4

Operation

The rubber seal should be considered as essentially an incompressible, viscous fluid having a very high surface tension. Whether by mechanical pressure from the surrounding structure or by pressure transmitted through hydraulic fluid, this extremely viscous fluid is forced to flow within the gland to produce “zero clearance” or block to the flow of the less viscous fluid being sealed. The rubber absorbs the stack-up of tolerances of the unit and its internal memory maintains the sealed condition.

Figure 1-1 illustrates the O-ring as installed, before the fluid pressure. Note that the O-ring is mechanically squeezed out of round between the outer and inner members to close the fluid passage. The seal material under mechanical pressure extrudes into the micro fine grooves of the gland.

Figure 1-2 illustrates the application of fluid pressure on the O-ring. Note that the O-ring has been forced to flow up to, but not into, the narrow gap between the mating surfaces and in so doing, has gained greater area and force of sealing contact.

Figure 1-3 shows the O-ring at its pressure limit with a small portion of the seal material entering the narrow gap between inner and outer members of the gland.

Figure 1-4 illustrates the result of further increasing pressure and the resulting extrusion failure. The surface tension of the elastomer is no longer sufficient to resist flow and the material extrudes (flows) into the open passage or clearance gap.

O-Ring Characteristics

A very early and historically prominent user of O-Rings cites a number of characteristics of O-ring seals which are still of interest to seal designers. Extracts of the more general characteristics are listed as follows:
The seals can be made perfectly leak-proof for cases of static pistons and cylinders for fluid pressures up to 300 bar (Limit of test pressure). The pressure may be constant or variable.

•There may be slight running leakage (a few drops per hundred strokes) depending on the film forming ability of the hydraulic medium. O-rings can be used between rotating members with similar results but in all cases the surface rubbing speed must be kept low.

•A single O-ring will seal with pressure applied alternately on one side and then on the other, but in cases of severe loading or usage under necessarily unfavourable conditions, seal life can be extended by designing the mechanism so that each seal is subjected to pressure in one direction only. Seals may be arranged in series as a safety measure but the first seal exposed to pressure will take the full load.

•O-ring seals must be radially compressed between the bottom of the seal groove and the cylinder wall for proper sealing action. This compression may cause the seal to roll slightly in its groove under certain conditions of piston motion, but the rolling action is not necessary for normal operation of the seals.

•In either static or dynamic O-ring seals under high pressure the primary cause of seal failure are extrusion of the seal material into the piston-cylinder clearance. The major factors effecting extrusion are fluid pressure, seal hardness and strength, and piston-cylinder clearance.

•Dynamic seals may fail by abrasion against the cylinder or piston walls. Therefore, the contacting surfaces should be polished for long seal life. Moving seals that pass over ports or surface irregularities while under hydraulic pressure are very quickly cut or worn to failure.

•The shape of the seal groove is unimportant as long as it results in proper compression of the seal between the bottom of the groove and the cylinder wall, and provides room for the compressed material to flow so that the seal is not solidly confined between metal surfaces.

•The seal may be housed in a groove cut in the cylinder wall instead of on the piston surface without any change in design limitations or seal performance.

Surface Roughness

Radial dynamic & static:
Rod/ Cylinder
Ra ≤ 0.2 – 0.8 µm (Rmax = 1.0 - 4.0 µm)
Groove surface static
Ra ≤ 1.50 – 4.0 µm (Rmax = 6 - 16 µm)
Groove surface dynamic/ pulsating pressure
Ra ≤ 1.5 – 2.5 µm (Rmax = 6 - 10 µm)

Axial static:
Groove surface
At pulsating pressures
Ra ≤ 1.5 – 2.5 µm (Rmax = 6 - 10 µm)
Ra ≤ 1.5 – 4.0 µm (Rmax = 6 - 16 µm)

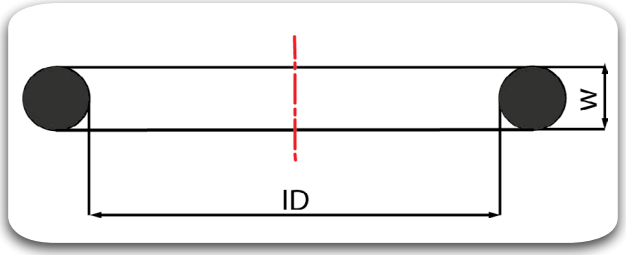

Sl. No.	ARP Sizes	Inner Dia ID	Tol ±	Cross Section W	Tol ±	VOL cm³
1	1.00	0.74	0.10	1.02	0.08	0.01
2	902-1/2	1.78	0.10	1.02	0.08	0.01
3	2.00	1.07	0.10	1.27	0.08	0.01
4	3.00	1.42	0.10	1.52	0.08	0.02
5	4.00	1.78	0.10	1.78	0.08	0.03
6	5.00	2.57	0.10	1.78	0.08	0.03
7	6.00	2.90	0.13	1.78	0.08	0.04
8	7.00	3.68	0.13	1.78	0.08	0.04
9	8.00	4.47	0.13	1.78	0.08	0.05
10	9.00	5.28	0.13	1.78	0.08	0.06
11	10.00	6.07	0.13	1.78	0.08	0.06
12	11.00	7.65	0.13	1.78	0.08	0.07
13	12.00	9.25	0.13	1.78	0.08	0.09
14	13.00	10.82	0.13	1.78	0.08	0.10
15	14.00	12.42	0.13	1.78	0.08	0.11
16	15.00	14.00	0.18	1.78	0.08	0.12
17	16.00	15.60	0.23	1.78	0.08	0.14
18	17.00	17.17	0.23	1.78	0.08	0.15
19	18.00	18.77	0.23	1.78	0.08	0.16
20	19.00	20.35	0.23	1.78	0.08	0.17
21	20.00	21.95	0.23	1.78	0.08	0.19
22	21.00	23.52	0.23	1.78	0.08	0.20
23	22.00	25.12	0.25	1.78	0.08	0.21
24	23.00	26.70	0.25	1.78	0.08	0.22
25	24.00	28.30	0.25	1.78	0.08	0.23
26	25.00	29.87	0.28	1.78	0.08	0.25
27	26.00	31.47	0.28	1.78	0.08	0.26
28	27.00	33.05	0.28	1.78	0.08	0.27
29	28.00	34.65	0.33	1.78	0.08	0.28
30	29.00	37.82	0.33	1.78	0.08	0.31
31	30.00	41.00	0.33	1.78	0.08	0.33
32	31.00	44.17	0.38	1.78	0.08	0.36
33	32.00	47.35	0.38	1.78	0.08	0.38
34	33.00	50.52	0.46	1.78	0.08	0.41
35	34.00	53.70	0.46	1.78	0.08	0.43
36	35.00	56.87	0.46	1.78	0.08	0.46
37	36.00	60.05	0.46	1.78	0.08	0.48
38	37.00	63.22	0.46	1.78	0.08	0.51
39	38.00	66.40	0.51	1.78	0.08	0.53
40	39.00	69.57	0.51	1.78	0.08	0.56
41	40.00	72.75	0.51	1.78	0.08	0.58
42	41.00	75.92	0.61	1.78	0.08	0.61
43	42.00	82.27	0.61	1.78	0.08	0.66
44	43.00	88.62	0.61	1.78	0.08	0.71
45	44.00	94.97	0.69	1.78	0.08	0.75
46	45.00	101.32	0.69	1.78	0.08	0.81
47	46.00	107.67	0.76	1.78	0.08	0.85
48	47.00	114.02	0.76	1.78	0.08	0.90
49	48.00	120.37	0.76	1.78	0.08	0.95
50	49.00	126.72	0.94	1.78	0.08	1.00
51	50.00	133.07	0.94	1.78	0.08	1.05
52	102.00	1.24	0.13	2.62	0.08	0.07
53	103.00	2.06	0.13	2.62	0.08	0.08
54	104.00	2.84	0.13	2.62	0.08	0.09
55	105.00	3.63	0.13	2.62	0.08	0.11
56	106.00	4.42	0.13	2.62	0.08	0.12
57	107.00	5.23	0.13	2.62	0.08	0.13
58	108.00	6.02	0.13	2.62	0.08	0.15
59	109.00	7.59	0.13	2.62	0.08	0.17
60	110.00	9.19	0.13	2.62	0.08	0.20
61	111.00	10.77	0.13	2.62	0.08	0.23
62	112.00	12.37	0.13	2.62	0.08	0.25
63	113.00	13.94	0.18	2.62	0.08	0.28
64	114.00	15.54	0.23	2.62	0.08	0.31
65	115.00	17.12	0.23	2.62	0.08	0.33
66	116.00	18.72	0.23	2.62	0.08	0.36
67	117.00	20.29	0.25	2.62	0.08	0.39
68	118.00	21.89	0.25	2.62	0.08	0.42
69	119.00	23.47	0.25	2.62	0.08	0.44

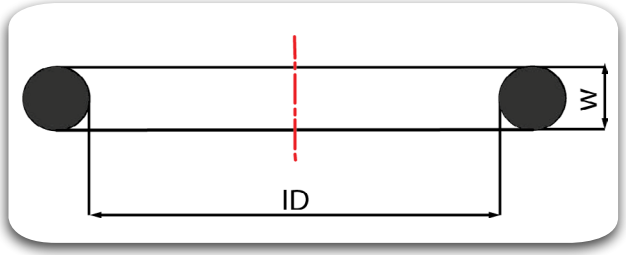

Sl. No.	ARP Sizes	Inner Dia ID	Tol ±	Cross Section W	Tol ±	VOL cm³
70	120.00	25.07	0.25	2.62	0.08	0.47
71	121.00	26.64	0.25	2.62	0.08	0.50
72	122.00	28.24	0.25	2.62	0.08	0.52
73	123.00	29.82	0.30	2.62	0.08	0.55
74	124.00	31.42	0.30	2.62	0.08	0.58
75	125.00	32.99	0.30	2.62	0.08	0.60
76	126.00	34.59	0.30	2.62	0.08	0.63
77	127.00	36.17	0.30	2.62	0.08	0.66
78	128.00	37.77	0.30	2.62	0.08	0.68
79	129.00	39.34	0.38	2.62	0.08	0.71
80	130.00	40.94	0.38	2.62	0.08	0.74
81	131.00	42.52	0.38	2.62	0.08	0.76
82	132.00	44.12	0.38	2.62	0.08	0.79
83	133.00	45.69	0.38	2.62	0.08	0.82
84	134.00	47.29	0.38	2.62	0.08	0.84
85	135.00	48.90	0.43	2.62	0.08	0.87
86	136.00	50.47	0.43	2.62	0.08	0.90
87	137.00	52.07	0.43	2.62	0.08	0.92
88	138.00	53.64	0.43	2.62	0.08	0.95
89	139.00	55.25	0.43	2.62	0.08	0.98
90	140.00	56.82	0.43	2.62	0.08	1.00
91	141.00	58.42	0.51	2.62	0.08	1.03
92	142.00	59.99	0.51	2.62	0.08	1.06
93	143.00	61.60	0.51	2.62	0.08	1.09
94	144.00	63.17	0.51	2.62	0.08	1.11
95	145.00	64.77	0.51	2.62	0.08	1.14
96	146.00	66.34	0.51	2.62	0.08	1.17
97	147.00	67.95	0.56	2.62	0.08	1.19
98	148.00	69.52	0.56	2.62	0.08	1.22
99	149.00	71.12	0.56	2.62	0.08	1.25
100	150.00	72.69	0.56	2.62	0.08	1.27
101	151.00	75.87	0.61	2.62	0.08	1.33
102	152.00	82.22	0.61	2.62	0.08	1.43
103	153.00	88.57	0.61	2.62	0.08	1.54
104	154.00	94.92	0.71	2.62	0.08	1.65
105	155.00	101.27	0.71	2.62	0.08	1.76
106	156.00	107.62	0.76	2.62	0.08	1.86
107	157.00	113.97	0.76	2.62	0.08	1.97
108	158.00	120.32	0.76	2.62	0.08	2.08
109	159.00	126.67	0.89	2.62	0.08	2.18
110	160.00	133.02	0.89	2.62	0.08	2.29
111	161.00	139.37	0.89	2.62	0.08	2.40
112	162.00	145.72	0.89	2.62	0.08	2.51
113	163.00	152.07	0.89	2.62	0.08	2.61
114	164.00	158.42	1.02	2.62	0.08	2.72
115	165.00	164.77	1.02	2.62	0.08	2.83
116	166.00	171.12	1.02	2.62	0.08	2.93
117	167.00	177.47	1.02	2.62	0.08	3.04
118	168.00	183.82	1.14	2.62	0.08	3.15
119	169.00	190.17	1.14	2.62	0.08	3.25
120	170.00	196.52	1.14	2.62	0.08	3.36
121	171.00	202.87	1.14	2.62	0.08	3.47
122	172.00	209.22	1.27	2.62	0.08	3.58
123	173.00	215.57	1.27	2.62	0.08	3.68
124	174.00	221.92	1.27	2.62	0.08	3.79
125	175.00	228.27	1.27	2.62	0.08	3.90
126	176.00	234.62	1.40	2.62	0.08	4.00
127	177.00	240.97	1.40	2.62	0.08	4.11
128	178.00	247.32	1.40	2.62	0.08	4.22
129	201.00	4.34	0.13	3.53	0.10	0.24
130	202.00	5.94	0.13	3.53	0.10	0.29
131	203.00	7.52	0.13	3.53	0.10	0.34
132	204.00	9.12	0.13	3.53	0.10	0.39
133	205.00	10.69	0.13	3.53	0.10	0.44
134	206.00	12.29	0.13	3.53	0.10	0.49
135	207.00	13.87	0.18	3.53	0.10	0.54
136	208.00	15.47	0.23	3.53	0.10	0.58
137	209.00	17.04	0.23	3.53	0.10	0.63
138	210.00	18.64	0.25	3.53	0.10	0.68

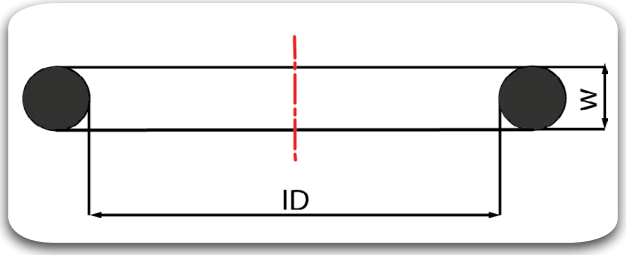

Sl No.	ARP Sizes	Inner Dia ID	Tol ±	Cross Section W	Tol ±	VOL cm³
139	211.00	20.22	0.25	3.53	0.10	0.73
140	212.00	21.82	0.25	3.53	0.10	0.78
141	213.00	23.39	0.25	3.53	0.10	0.83
142	214.00	24.99	0.25	3.53	0.10	0.88
143	215.00	26.57	0.25	3.53	0.10	0.93
144	216.00	28.17	0.30	3.53	0.10	0.98
145	217.00	29.74	0.30	3.53	0.10	1.02
146	218.00	31.34	0.30	3.53	0.10	1.08
147	219.00	32.92	0.30	3.53	0.10	1.12
148	220.00	34.52	0.30	3.53	0.10	1.17
149	221.00	36.09	0.30	3.53	0.10	1.22
150	222.00	37.69	0.38	3.53	0.10	1.26
151	223.00	40.87	0.38	3.53	0.10	1.37
152	224.00	44.04	0.38	3.53	0.10	1.46
153	225.00	47.22	0.46	3.53	0.10	1.56
154	226.00	50.39	0.46	3.53	0.10	1.66
155	227.00	53.57	0.46	3.53	0.10	1.76
156	228.00	56.74	0.51	3.53	0.10	1.85
157	229.00	59.92	0.51	3.53	0.10	1.95
158	230.00	63.09	0.51	3.53	0.10	2.05
159	231.00	66.27	0.51	3.53	0.10	2.15
160	232.00	69.44	0.61	3.53	0.10	2.25
161	233.00	72.62	0.61	3.53	0.10	2.34
162	234.00	75.79	0.61	3.53	0.10	2.44
163	235.00	78.97	0.61	3.53	0.10	2.54
164	236.00	82.14	0.61	3.53	0.10	2.64
165	237.00	85.32	0.61	3.53	0.10	2.73
166	238.00	88.49	0.61	3.53	0.10	2.83
167	239.00	91.67	0.71	3.53	0.10	2.93
168	240.00	94.84	0.71	3.53	0.10	3.03
169	241.00	98.02	0.71	3.53	0.10	3.12
170	242.00	101.19	0.71	3.53	0.10	3.22
171	243.00	104.37	0.71	3.53	0.10	3.32
172	244.00	107.54	0.76	3.53	0.10	3.42
173	245.00	110.72	0.76	3.53	0.10	3.51
174	246.00	113.89	0.76	3.53	0.10	3.61
175	247.00	117.07	0.76	3.53	0.10	3.71
176	248.00	120.24	0.76	3.53	0.10	3.81
177	249.00	123.42	0.89	3.53	0.10	3.91
178	250.00	126.59	0.89	3.53	0.10	4.00
179	251.00	129.77	0.89	3.53	0.10	4.10
180	252.00	132.94	0.89	3.53	0.10	4.20
181	253.00	136.12	0.89	3.53	0.10	4.30
182	254.00	139.29	0.89	3.53	0.10	4.39
183	255.00	142.47	0.89	3.53	0.10	4.49
184	256.00	145.64	0.89	3.53	0.10	4.59
185	257.00	148.82	0.89	3.53	0.10	4.69
186	258.00	151.99	0.89	3.53	0.10	4.78
187	259.00	158.34	1.02	3.53	0.10	4.98
188	260.00	164.69	1.02	3.53	0.10	5.17
189	261.00	171.04	1.02	3.53	0.10	5.37
190	262.00	177.39	1.02	3.53	0.10	5.57
191	263.00	183.74	1.14	3.53	0.10	5.76
192	264.00	190.09	1.14	3.53	0.10	5.96
193	265.00	196.44	1.14	3.53	0.10	6.15
194	266.00	202.79	1.14	3.53	0.10	6.35
195	267.00	209.14	1.27	3.53	0.10	6.54
196	268.00	215.49	1.27	3.53	0.10	6.74
197	269.00	221.84	1.27	3.53	0.10	6.93
198	270.00	228.19	1.27	3.53	0.10	7.13
199	271.00	234.54	1.40	3.53	0.10	7.32
200	272.00	240.89	1.40	3.53	0.10	7.52
201	273.00	247.24	1.40	3.53	0.10	7.72
202	274.00	253.59	1.40	3.53	0.10	7.91
203	275.00	266.29	1.40	3.53	0.10	8.30
204	276.00	278.99	1.65	3.53	0.10	8.69
205	277.00	291.69	1.65	3.53	0.10	9.08
206	278.00	304.39	1.65	3.53	0.10	9.47
207	279.00	329.79	1.65	3.53	0.10	10.25

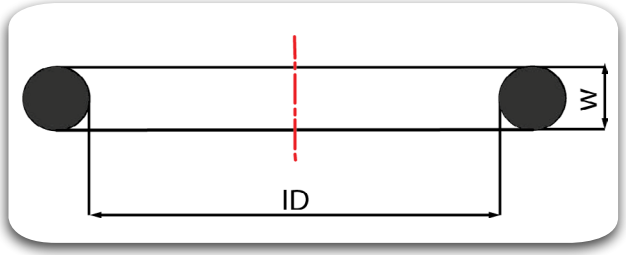

Sl No.	ARP Sizes	Inner Dia ID	Tol ±	Cross Section W	Tol ±	VOL cm^3
208	280.00	355.19	1.65	3.53	0.10	11.10
209	281.00	380.59	1.65	3.53	0.10	11.82
210	282.00	405.26	1.90	3.53	0.10	12.58
211	283.00	430.66	2.16	3.53	0.10	13.37
212	284.00	456.06	2.42	3.53	0.10	14.14
213	309.00	10.46	0.13	5.33	0.13	1.11
214	310.00	12.07	0.13	5.33	0.13	1.22
215	311.00	13.64	0.18	5.33	0.13	1.33
216	312.00	15.24	0.23	5.33	0.13	1.44
217	313.00	16.81	0.23	5.33	0.13	1.55
218	314.00	18.42	0.25	5.33	0.13	1.67
219	315.00	19.99	0.25	5.33	0.13	1.78
220	316.00	21.59	0.25	5.33	0.13	1.89
221	317.00	23.16	0.25	5.33	0.13	2.00
222	318.00	24.77	0.25	5.33	0.13	2.11
223	319.00	26.34	0.25	5.33	0.13	2.22
224	320.00	27.94	0.30	5.33	0.13	2.33
225	321.00	29.51	0.30	5.33	0.13	2.44
226	322.00	31.12	0.30	5.33	0.13	2.56
227	323.00	32.69	0.30	5.33	0.13	2.67
228	324.00	34.29	0.30	5.33	0.13	2.78
229	325.00	37.47	0.38	5.33	0.13	3.00
230	326.00	40.64	0.38	5.33	0.13	3.23

Sl No.	ARP Sizes	Inner Dia ID	Tol ±	Cross Section W	Tol ±	VOL cm^3
231	327.00	43.82	0.38	5.33	0.13	3.45
232	328.00	46.99	0.38	5.33	0.13	3.68
233	329.00	50.17	0.46	5.33	0.13	3.90
234	330.00	53.34	0.46	5.33	0.13	4.12
235	331.00	56.52	0.46	5.33	0.13	4.34
236	332.00	59.69	0.46	5.33	0.13	4.57
237	333.00	62.87	0.51	5.33	0.13	4.79
238	334.00	66.04	0.51	5.33	0.13	5.01
239	335.00	69.22	0.51	5.33	0.13	5.24
240	336.00	72.39	0.51	5.33	0.13	5.46
241	337.00	75.57	0.61	5.33	0.13	5.68
242	338.00	78.74	0.61	5.33	0.13	5.90
243	339.00	81.92	0.61	5.33	0.13	6.13
244	340.00	85.09	0.61	5.33	0.13	6.35
245	341.00	88.27	0.61	5.33	0.13	6.57
246	342.00	91.44	0.71	5.33	0.13	6.80
247	343.00	94.62	0.71	5.33	0.13	7.02
248	344.00	97.79	0.71	5.33	0.13	7.24
249	345.00	100.97	0.71	5.33	0.13	7.46
250	346.00	104.14	0.71	5.33	0.13	7.69
251	347.00	107.32	0.76	5.33	0.13	7.91
252	348.00	110.49	0.76	5.33	0.13	8.13
253	349.00	113.67	0.76	5.33	0.13	8.36

Sl No.	ARP Sizes	Inner Dia ID	Tol ±	Cross Section W	Tol ±	VOL cm^3
254	350.00	116.84	0.76	5.33	0.13	8.59
255	351.00	120.02	0.76	5.33	0.13	8.82
256	352.00	123.19	0.76	5.33	0.13	9.04
257	353.00	126.37	0.94	5.33	0.13	9.26
258	354.00	129.54	0.94	5.33	0.13	9.49
259	355.00	132.72	0.94	5.33	0.13	9.71
260	356.00	135.89	0.94	5.33	0.13	9.93
261	357.00	139.07	0.94	5.33	0.13	10.16
262	358.00	142.24	0.94	5.33	0.13	10.38
263	359.00	145.42	0.94	5.33	0.13	10.60
264	360.00	148.49	0.94	5.33	0.13	10.83
265	361.00	151.77	0.94	5.33	0.13	11.05
266	362.00	158.12	1.02	5.33	0.13	11.50
267	363.00	164.47	1.02	5.33	0.13	11.94
268	364.00	170.82	1.02	5.33	0.13	12.39
269	365.00	177.17	1.02	5.33	0.13	12.84
270	366.00	183.52	1.14	5.33	0.13	13.28
271	367.00	189.87	1.14	5.33	0.13	13.73
272	368.00	196.22	1.14	5.33	0.13	14.18
273	369.00	202.57	1.14	5.33	0.13	14.62
274	370.00	208.92	1.30	5.33	0.13	15.07
275	371.00	215.27	1.30	5.33	0.13	15.52
276	372.00	221.62	1.30	5.33	0.13	15.90

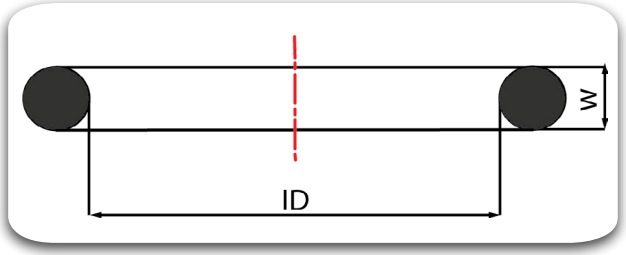

Sl. No.	ARP Sizes	Inner Dia ID	Tol ±	Cross Section W	Tol ±	VOL cm^3
277	373.00	227.97	1.30	5.33	0.13	16.41
278	374.00	234.32	1.40	5.33	0.13	16.86
279	375.00	240.67	1.40	5.33	0.13	17.30
280	376.00	247.02	1.40	5.33	0.13	17.75
281	377.00	253.37	1.40	5.33	0.13	18.20
282	378.00	266.07	1.52	5.33	0.13	19.09
283	379.00	278.77	1.52	5.33	0.13	19.98
284	380.00	291.47	1.65	5.33	0.13	20.88
285	381.00	304.17	1.65	5.33	0.13	21.77
286	382.00	329.57	1.65	5.33	0.13	23.56
287	383.00	354.97	1.78	5.33	0.13	25.34
288	384.00	380.37	1.78	5.33	0.13	27.13
289	385.00	405.26	1.90	5.33	0.13	28.88
290	386.00	430.66	2.03	5.33	0.13	30.67
291	387.00	456.06	2.15	5.33	0.13	32.45
292	388.00	481.38	2.25	5.33	0.13	34.24
293	389.00	506.78	2.41	5.33	0.13	36.03
294	390.00	532.18	2.41	5.33	0.13	37.81
295	391.00	557.58	2.55	5.33	0.13	39.60
296	392.00	582.68	2.65	5.33	0.13	41.36
297	393.00	608.08	2.80	5.33	0.13	43.15
298	394.00	633.48	2.90	5.33	0.13	44.93
299	395.00	658.88	3.05	5.33	0.13	46.72
300	425.00	113.67	0.84	7.00	0.15	14.53
301	426.00	116.84	0.84	7.00	0.15	14.91
302	427.00	120.02	0.84	7.00	0.15	15.29
303	428.00	123.19	0.84	7.00	0.15	15.67
304	429.00	126.37	0.94	7.00	0.15	16.06
305	430.00	129.54	0.94	7.00	0.15	16.44
306	431.00	132.72	0.94	7.00	0.15	16.82
307	432.00	135.89	0.94	7.00	0.15	17.20
308	433.00	139.07	0.94	7.00	0.15	17.59
309	434.00	142.24	0.94	7.00	0.15	17.97
310	435.00	145.42	0.94	7.00	0.15	18.35
311	436.00	148.59	0.94	7.00	0.15	18.73
312	437.00	151.77	0.94	7.00	0.15	19.11
313	438.00	158.12	1.02	7.00	0.15	19.88
314	439.00	164.47	1.02	7.00	0.15	20.64
315	440.00	170.82	1.02	7.00	0.15	21.41
316	441.00	177.17	1.02	7.00	0.15	22.17
317	442.00	183.52	1.14	7.00	0.15	22.94
318	443.00	189.87	1.14	7.00	0.15	23.70
319	444.00	196.22	1.14	7.00	0.15	24.47
320	445.00	202.57	1.14	7.00	0.15	25.23
321	446.00	215.27	1.40	7.00	0.15	26.76
322	447.00	227.97	1.40	7.00	0.15	28.29
323	448.00	240.67	1.40	7.00	0.15	29.82
324	449.00	253.37	1.40	7.00	0.15	31.35
325	450.00	266.07	1.52	7.00	0.15	32.88
326	451.00	278.77	1.52	7.00	0.15	34.41
327	452.00	291.47	1.52	7.00	0.15	35.94
328	453.00	304.17	1.52	7.00	0.15	37.46
329	454.00	316.87	1.52	7.00	0.15	38.99
330	455.00	329.57	1.52	7.00	0.15	40.52
331	456.00	342.27	1.78	7.00	0.15	42.05
332	457.00	354.97	1.78	7.00	0.15	43.58
333	458.00	367.67	1.78	7.00	0.15	45.11
334	459.00	380.37	1.78	7.00	0.15	46.64
335	460.00	393.07	1.78	7.00	0.15	48.17
336	461.00	405.26	1.90	7.00	0.15	49.74
337	462.00	417.96	1.90	7.00	0.15	51.28
338	463.00	430.66	2.05	7.00	0.15	52.81
339	464.00	443.36	2.15	7.00	0.15	54.34
340	465.00	456.06	2.15	7.00	0.15	55.87
341	466.00	468.76	2.15	7.00	0.15	57.41
342	467.00	481.46	2.29	7.00	0.15	58.94
343	468.00	494.16	2.29	7.00	0.15	60.47
344	469.00	506.86	2.41	7.00	0.15	62.00
345	470.00	532.26	2.41	7.00	0.15	65.07

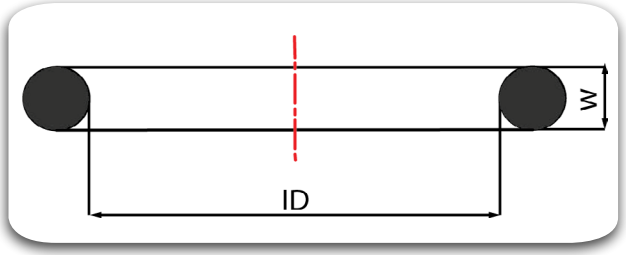

Sl. No.	ARP Sizes	Inner Dia ID	Tol ±	Cross Section W	Tol ±	VOL cm^3
346	471.00	557.66	2.55	7.00	0.15	68.13
347	472.00	582.68	2.65	7.00	0.15	71.15
348	473.00	608.08	2.80	7.00	0.15	74.22
349	474.00	633.48	2.90	7.00	0.15	77.28
350	475.00	658.88	3.05	7.00	0.15	80.35
351	901.00	4.70	0.13	1.42	0.08	-
352	902.00	6.07	0.13	1.63	0.08	-
353	903.00	7.65	0.13	1.63	0.08	-
354	904.00	8.92	0.13	1.83	0.08	-
355	905.00	10.52	0.13	1.83	0.08	-
356	906.00	11.89	0.13	1.98	0.08	-
357	907.00	13.46	0.13	2.08	0.08	-
358	908.00	16.36	0.23	2.20	0.08	-
359	909.00	17.93	0.23	2.46	0.08	-
360	910.00	19.18	0.23	2.46	0.08	-
361	911.00	21.92	0.23	2.95	0.10	-
362	912.00	23.47	0.23	2.95	0.10	-
363	913.00	25.04	0.25	2.95	0.10	-
364	914.00	26.62	0.25	2.95	0.10	-
365	916.00	29.74	0.25	2.95	0.10	-
366	918.00	34.42	0.30	2.95	0.10	-
367	920.00	37.47	0.36	3.00	0.10	-
368	924.00	43.69	0.36	3.00	0.10	-

Sl. No.	ARP Sizes	Inner Dia ID	Tol ±	Cross Section W	Tol ±	VOL cm^3
369	928.00	53.09	0.46	3.00	0.10	-
370	932.00	59.36	0.46	3.00	0.10	-
371	ASA 100	545.47	2.55	7.00	-	-
372	ASA 104	596.27	2.80	7.00	-	-
373	ASA 108	647.07	3.05	7.00	-	-

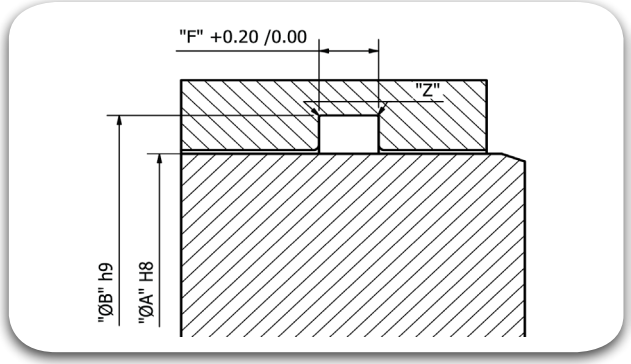

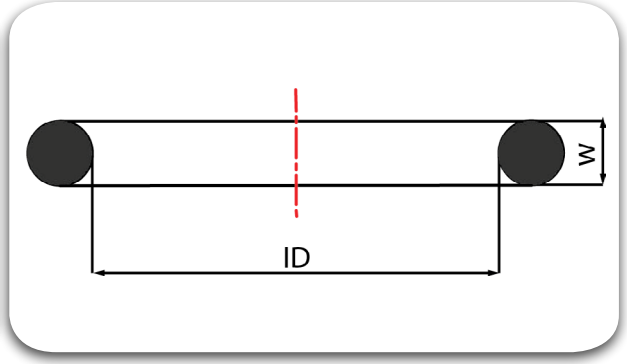

Rod Ø "A" mm	O-Ring Dimensions					Groove Dimensions					Radius		TRIADA® Part Number
	Part No.	Inner Dia. I.D		Width "W"		Groove Dia. "ØB"		Groove Width without back-up ring	Groove Width with 1 back-up ring	Groove Width with 2 back-up ring	Without back-up ring	With back-up ring	
		I.D mm	Tol ±mm	W mm	Tol ±mm	B mm	Tol ±mm	"F" mm	"F" mm	"F" mm	"Z" mm	"Z" mm	
0.80	1.00	0.74	0.10	1.02	0.08	2.40	0.05	1.40	NA	NA	0.20	0.20	OME00074 0102 T571
1.00	2.00	1.07	0.10	1.27	0.08	3.00	0.05	1.80	NA	NA	0.20	0.20	OME00107 0127 T571
1.50	3.00	1.42	0.10	1.52	0.08	3.90	0.05	1.90	2.90	3.90	0.20	0.20	OME00142 0152 T571
	102.00	1.24	0.10	2.62	0.08	6.00	0.10	3.10	4.50	5.90	0.60	0.30	OME00124 0262 T571
2.00	9021/2	1.78	0.10	1.02	0.08	3.60	0.05	1.40	NA	NA	0.20	0.20	OME00178 0102 T571
	4.00	1.78	0.13	1.78	0.08	4.90	0.05	2.20	3.60	5.00	0.40	0.20	OME00178 0178 T571
	103.00	2.06	0.13	2.62	0.08	6.50	0.10	3.10	4.50	5.90	0.60	0.30	OME00206 0262 T571
2.50	5.00	2.57	0.13	1.78	0.08	5.40	0.05	2.20	3.60	5.00	0.40	0.20	OME00257 0178 T571
3.00	6.00	2.90	0.13	1.78	0.08	5.90	0.05	2.20	3.60	5.00	0.40	0.20	OME00290 0178 T571
	104.00	2.84	0.13	2.62	0.08	7.50	0.10	3.10	4.50	5.90	0.60	0.30	OME00284 0262 T571
4.00	7.00	3.68	0.13	1.78	0.08	6.90	0.05	2.20	3.60	5.00	0.40	0.20	OME00368 0178 T571
	105.00	3.63	0.13	2.62	0.08	8.50	0.10	3.10	4.50	5.90	0.60	0.30	OME00363 0262 T571
	201.00	4.34	0.18	3.53	0.10	10.20	0.10	4.20	5.60	7.00	1.00	0.40	OME00434 0353 T571
5.00	8.00	4.47	0.13	1.78	0.08	7.90	0.05	2.20	3.60	5.00	0.40	0.20	OME00447 0178 T571
	106.00	4.42	0.13	2.62	0.08	9.50	0.10	3.10	4.50	5.90	0.60	0.30	OME00442 0262 T571
5.50	9.00	5.28	0.13	1.78	0.08	8.40	0.05	2.20	3.60	5.00	0.40	0.20	OME00528 0178 T571
	107.00	5.23	0.13	2.62	0.08	10.00	0.10	3.10	4.50	5.90	0.60	0.30	OME00523 0262 T571

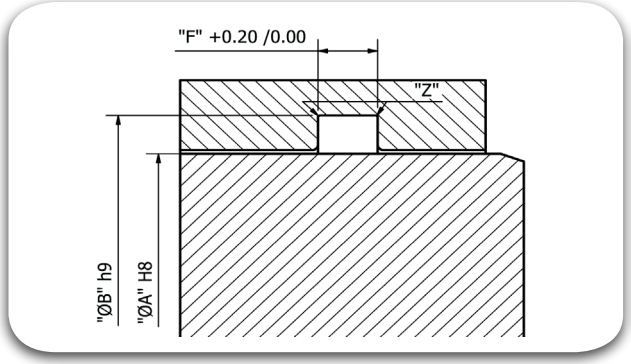

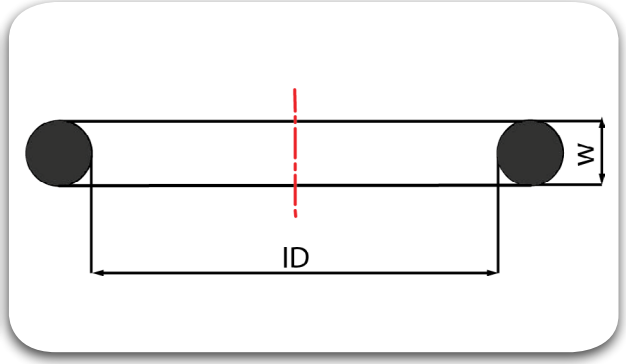

Rod Ø "A" mm	O-Ring Dimensions					Groove Dimensions					Radius		TRIADA® Part Number
	Part No.	Inner Dia. I.D		Width "W"		Groove Dia. "ØB"		Groove Width without back-up ring	Groove Width with 1 back-up ring	Groove Width with 2 back-up ring	Without back-up ring	With back-up ring	
		I.D mm	Tol ±mm	W mm	Tol ±mm	B mm	Tol ±mm	"F" mm	"F" mm	"F" mm	"Z" mm	"Z" mm	
6.00	10.00	6.07	0.13	1.78	0.08	8.90	0.05	2.20	3.60	5.00	0.40	0.20	OME00607 0178 T571
	108.00	6.02	0.13	2.62	0.08	10.50	0.10	3.10	4.50	5.90	0.60	0.30	OME00602 0262 T571
	202.00	5.94	0.18	3.53	0.10	12.20	0.10	4.20	5.60	7.00	1.00	0.40	OME00594 0353 T571
8.00	11.00	7.65	0.13	1.78	0.08	10.90	0.05	2.20	3.60	5.00	0.40	0.20	OME00765 0178 T571
	109.00	7.59	0.13	2.62	0.08	12.50	0.10	3.10	4.50	5.90	0.60	0.30	OME00759 0262 T571
	203.00	7.52	0.18	3.53	1.00	14.20	0.10	4.20	5.60	7.00	1.00	0.40	OME00752 0353 T571
9.00	12.00	9.25	0.13	1.78	0.08	11.90	0.05	2.20	3.60	5.00	0.40	0.20	OME00925 0178 T571
	110.00	9.19	0.13	2.62	0.08	13.50	0.10	3.10	4.50	5.90	0.60	0.30	OME00919 0262 T571
	204.00	9.12	0.18	3.53	1.00	15.20	0.10	4.20	5.60	7.00	1.00	0.40	OME00912 0353 T571
10.00	13.00	10.82	0.13	1.78	0.08	12.90	0.05	2.20	3.60	5.00	0.40	0.20	OME01082 0178 T571
	111.00	10.77	0.13	2.62	0.08	14.50	0.10	3.10	4.50	5.90	0.60	0.30	OME01077 0262 T571
	205.00	10.69	0.18	3.53	0.10	16.20	0.10	4.20	5.60	7.00	1.00	0.40	OME01069 0353 T571
	309.00	10.46	0.18	5.33	0.13	19.40	0.15	6.20	7.90	9.60	1.20	0.60	OME01046 0533 T571
12.00	14.00	12.42	0.13	1.78	0.08	14.90	0.05	2.20	3.60	5.00	0.40	0.20	OME01242 0178 T571
	112.00	12.37	0.13	2.62	0.08	16.50	0.10	3.10	4.50	5.90	0.60	0.30	OME01237 0262 T571
	206.00	12.29	0.18	3.53	0.10	18.20	0.10	4.20	5.60	7.00	1.00	0.40	OME01229 0353 T571
	310.00	12.07	0.18	5.33	0.13	21.40	0.15	6.20	7.90	9.60	1.20	0.60	OME01207 0533 T571

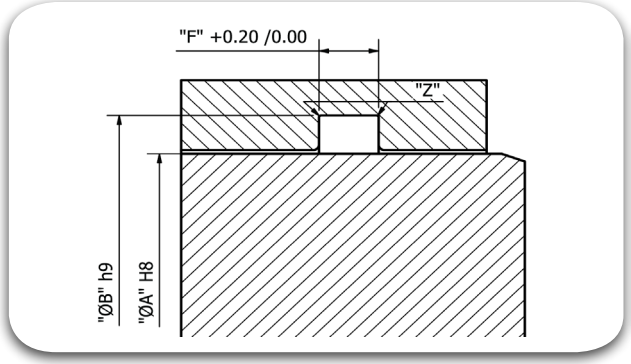

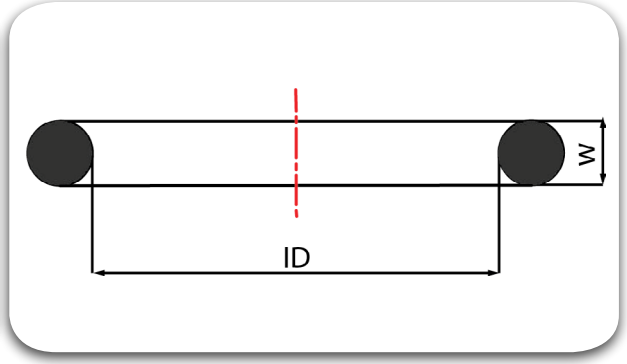

Rod Ø "A" mm	O-Ring Dimensions					Groove Dimensions					Radius		TRIADA® Part Number
	Part No.	Inner Dia. I.D		Width "W"		Groove Dia. "ØB"		Groove Width without back-up ring	Groove Width with 1 back-up ring	Groove Width with 2 back-up ring	Without back-up ring	With back-up ring	
		I.D mm	Tol ±mm	W mm	Tol ±mm	B mm	Tol ±mm	"F" mm	"F" mm	"F" mm	"Z" mm	"Z" mm	
14.00	15.00	14.00	0.18	1.78	0.08	16.90	0.05	2.20	3.60	5.00	0.40	0.20	OME01400 0178 T571
	113.00	13.94	0.13	2.62	0.08	18.50	0.10	3.10	4.50	5.90	0.60	0.30	OME01394 0262 T571
	207.00	13.87	0.18	3.53	0.10	20.20	0.10	4.20	5.60	7.00	1.00	0.40	OME01387 0353 T571
	311.00	13.64	0.18	5.33	0.13	23.40	0.15	6.20	7.90	9.60	1.20	0.60	OME01364 0533 T571
15.00	16.00	15.60	0.23	1.78	0.08	17.90	0.05	2.20	3.60	5.00	0.40	0.20	OME01560 0178 T571
	114.00	15.54	0.23	2.62	0.08	19.50	0.10	3.10	4.50	5.90	0.60	0.30	OME01554 0262 T571
	208.00	15.47	0.18	3.53	0.10	21.20	0.10	4.20	5.60	7.00	1.00	0.40	OME01547 0353 T571
	312.00	15.24	0.18	5.33	0.13	24.40	0.15	6.20	7.90	9.60	1.20	0.60	OME01524 0533 T571
16.00	16.00	15.60	0.23	1.78	0.08	18.90	0.05	2.20	3.60	5.00	0.40	0.20	OME01560 0178 T571
	114.00	15.54	0.23	2.62	0.08	20.50	0.10	3.10	4.50	5.90	0.60	0.30	OME01554 0262 T571
	208.00	15.47	0.18	3.53	0.10	22.20	0.10	4.20	5.60	7.00	1.00	0.40	OME01547 0353 T571
	313.00	16.81	0.18	5.33	0.13	25.40	0.15	6.20	7.90	9.60	1.20	0.60	OME01681 0533 T571
17.00	17.00	17.17	0.23	1.78	0.08	19.90	0.05	2.20	3.60	5.00	0.40	0.20	OME01717 0178 T571
	115.00	17.12	0.23	2.62	0.08	21.50	0.10	3.10	4.50	5.90	0.60	0.30	OME01712 0262 T571
	209.00	17.04	0.18	3.53	0.10	23.20	0.10	4.20	5.60	7.00	1.00	0.40	OME01704 0353 T571
	313.00	16.81	0.18	5.33	0.13	26.40	0.15	6.20	7.90	9.60	1.20	0.60	OME01681 0533 T571

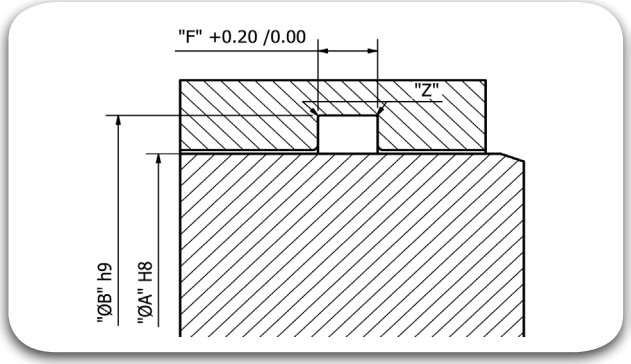

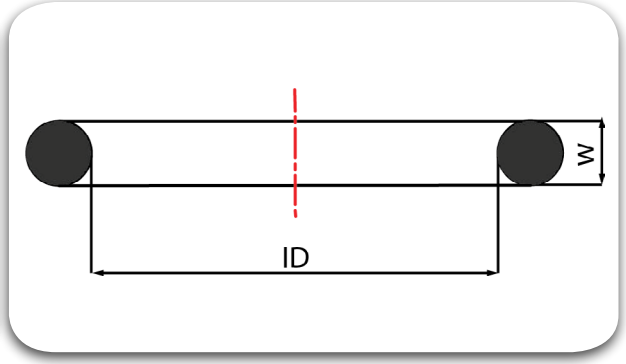

Rod Ø "A" mm	O-Ring Dimensions					Groove Dimensions					Radius		TRIADA® Part Number
	Part No.	Inner Dia. I.D		Width "W"		Groove Dia. ØB		Groove Width without back-up ring	Groove Width with 1 back-up ring	Groove Width with 2 back-up ring	Without back-up ring	With back-up ring	
		I.D mm	Tol ±mm	W mm	Tol ±mm	B mm	Tol ±mm	"F" mm	"F" mm	"F" mm	"Z" mm	"Z" mm	
18.00	18.00	18.77	0.23	1.78	0.08	20.90	0.05	2.20	3.60	5.00	0.40	0.20	OME01877 0178 T571
	116.00	18.72	0.23	2.62	0.08	22.50	0.10	3.10	4.50	5.90	0.60	0.30	OME01872 0262 T571
	210.00	18.64	0.25	3.53	0.10	24.20	0.10	4.20	5.60	7.00	1.00	0.40	OME01864 0353 T571
	314.00	18.42	0.18	5.33	0.13	27.40	0.15	6.20	7.90	9.60	1.20	0.60	OME01842 0533 T571
20.00	19.00	20.35	0.23	1.78	0.08	22.90	0.05	2.20	3.60	5.00	0.40	0.20	OME02035 0178 T571
	117.00	20.29	0.25	2.62	0.08	24.50	0.10	3.10	4.50	5.90	0.60	0.30	OME02029 0262 T571
	211.00	20.22	0.25	3.53	0.10	26.20	0.10	4.20	5.60	7.00	1.00	0.40	OME02022 0353 T571
	315.00	19.99	0.25	5.33	0.13	29.40	0.15	6.20	7.90	9.60	1.20	0.60	OME01999 0533 T571
22.00	20.00	21.95	0.23	1.78	0.08	24.90	0.05	2.20	3.60	5.00	0.40	0.20	OME02195 0178 T571
	118.00	21.89	0.25	2.62	0.08	26.50	0.10	3.10	4.50	5.90	0.60	0.30	OME02189 0262 T571
	212.00	21.82	0.25	3.53	0.10	28.20	0.10	4.20	5.60	7.00	1.00	0.40	OME02182 0353 T571
	316.00	21.59	0.25	5.33	0.13	31.40	0.15	6.20	7.90	9.60	1.20	0.60	OME02159 0533 T571
23.00	21.00	23.52	0.23	1.78	0.08	25.90	0.05	2.20	3.60	5.00	0.40	0.20	OME02352 0178 T571
	119.00	23.47	0.25	2.62	0.08	27.50	0.10	3.10	4.50	5.90	0.60	0.30	OME02347 0262 T571
	213.00	23.39	0.25	3.53	0.10	29.20	0.10	4.20	5.60	7.00	1.00	0.40	OME02339 0353 T571
	317.00	23.16	0.25	5.33	0.13	32.40	0.15	6.20	7.90	9.60	1.20	0.60	OME02316 0533 T571

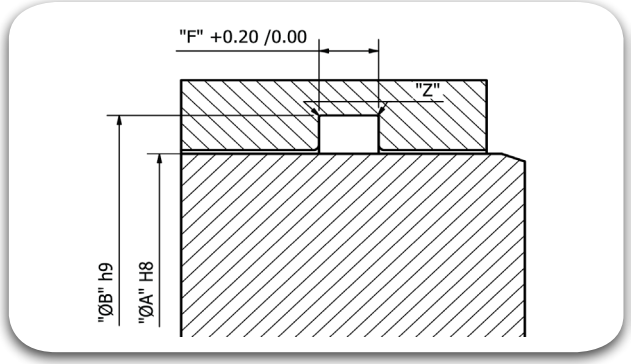

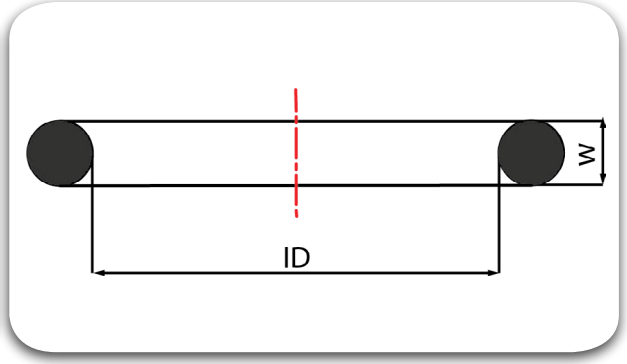

Rod Ø "A" mm	O-Ring Dimensions					Groove Dimensions					Radius		TRIADA® Part Number
	Part No.	Inner Dia. I.D		Width "W"		Groove Dia. ØB		Groove Width without back-up ring	Groove Width with 1 back-up ring	Groove Width with 2 back-up ring	Without back-up ring	With back-up ring	
		I.D mm	Tol ±mm	W mm	Tol ±mm	B mm	Tol ±mm	"F" mm	"F" mm	"F" mm	"Z" mm	"Z" mm	
25.00	22.00	25.12	0.25	1.78	0.08	27.90	0.05	2.20	3.60	5.00	0.40	0.20	OME02512 0178 T571
	120.00	25.07	0.25	2.62	0.08	29.50	0.10	3.10	4.50	5.90	0.60	0.30	OME02507 0262 T571
	214.00	24.99	0.25	3.53	0.10	31.20	0.10	4.20	5.60	7.00	1.00	0.40	OME02499 0353 T571
	318.00	24.77	0.25	5.33	0.13	33.40	0.15	6.20	7.90	9.60	1.20	0.60	OME02477 0533 T571
27.00	23.00	26.70	0.25	1.78	0.08	29.90	0.05	2.20	3.60	5.00	0.40	0.20	OME02670 0178 T571
	121.00	26.64	0.25	2.62	0.08	31.50	0.10	3.10	4.50	5.90	0.60	0.30	OME02664 0262 T571
	215.00	26.57	0.25	3.53	0.10	33.20	0.10	4.20	5.60	7.00	1.00	0.40	OME02657 0353 T571
	319.00	26.34	0.25	5.33	0.13	36.40	0.15	6.20	7.90	9.60	1.20	0.60	OME02634 0533 T571
28.00	24.00	28.30	0.25	1.78	0.08	30.90	0.05	2.20	3.60	5.00	0.40	0.20	OME02830 0178 T571
	122.00	28.24	0.25	2.62	0.08	32.50	0.10	3.10	4.50	5.90	0.60	0.30	OME02824 0262 T571
	216.00	28.17	0.25	3.53	0.10	34.20	0.10	4.20	5.60	7.00	1.00	0.40	OME02817 0353 T571
	320.00	27.94	0.25	5.33	0.13	37.40	0.15	6.20	7.90	9.60	1.20	0.60	OME02794 0533 T571
30.00	25.00	29.87	0.28	1.78	0.08	32.90	0.05	2.20	3.60	5.00	0.40	0.20	OME02987 0178 T571
	123.00	29.82	0.25	2.62	0.08	34.50	0.10	3.10	4.50	5.90	0.60	0.30	OME02982 0262 T571
	217.00	29.74	0.30	3.53	0.10	36.20	0.10	4.20	5.60	7.00	1.00	0.40	OME02974 0353 T571
	321.00	29.51	0.25	5.33	0.13	39.40	0.15	6.20	7.90	9.60	1.20	0.60	OME02951 0533 T571

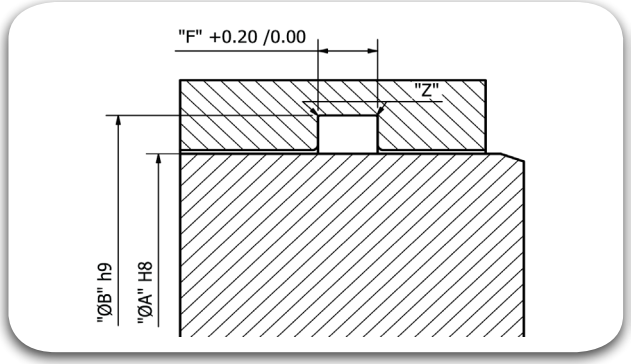

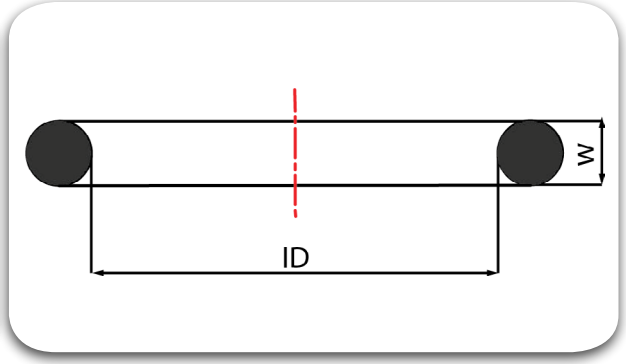

Rod Ø "A" mm	O-Ring Dimensions					Groove Dimensions					Radius		TRIADA® Part Number
	Part No.	Inner Dia. I.D		Width "W"		Groove Dia. ØB		Groove Width without back-up ring	Groove Width with 1 back-up ring	Groove Width with 2 back-up ring	Without back-up ring	With back-up ring	
		I.D mm	Tol ±mm	W mm	Tol ±mm	B mm	Tol ±mm	"F" mm	"F" mm	"F" mm	"Z" mm	"Z" mm	
31.00	26.00	31.47	0.28	1.78	0.08	33.90	0.05	2.20	3.60	5.00	0.40	0.20	OME03147 0178 T571
	124.00	31.42	0.30	2.62	0.08	35.50	0.10	3.10	4.50	5.90	0.60	0.30	OME03142 0262 T571
	218.00	31.34	0.30	3.53	0.10	37.20	0.10	4.20	5.60	7.00	1.00	0.40	OME03134 0353 T571
	322.00	31.12	0.25	5.33	0.13	40.40	0.15	6.20	7.90	9.60	1.20	0.60	OME03112 0533 T571
32.00	27.00	33.05	0.28	1.78	0.08	34.90	0.05	2.20	3.60	5.00	0.40	0.20	OME03305 0178 T571
	125.00	32.99	0.30	2.62	0.08	36.50	0.10	3.10	4.50	5.90	0.60	0.30	OME03299 0262 T571
	219.00	32.92	0.30	3.53	0.10	38.20	0.10	4.20	5.60	7.00	1.00	0.40	OME03292 0353 T571
	323.00	32.69	0.25	5.33	0.13	41.40	0.15	6.20	7.90	9.60	1.20	0.60	OME03269 0533 T571
35.00	28.00	34.65	0.33	1.78	0.08	37.90	0.05	2.20	3.60	5.00	0.40	0.20	OME03465 0178 T571
	126.00	34.59	0.30	2.62	0.08	39.50	0.10	3.10	4.50	5.90	0.60	0.30	OME03459 0262 T571
	220.00	34.52	0.30	3.53	0.10	41.20	0.10	4.20	5.60	7.00	1.00	0.40	OME03452 0353 T571
	324.00	34.29	0.25	5.33	0.13	44.40	0.15	6.20	7.90	9.60	1.20	0.60	OME03429 0533 T571
36.00	127.00	36.17	0.00	2.62	0.08	40.50	0.10	3.10	3.60	5.90	0.60	0.30	OME03617 0262 T571
	221.00	36.09	0.30	3.53	0.10	42.20	0.10	4.20	5.60	7.00	1.00	0.40	OME03609 0353 T571
	325.00	37.47	0.38	5.33	0.13	45.40	0.15	6.20	7.90	9.60	1.20	0.60	OME03747 0533 T571

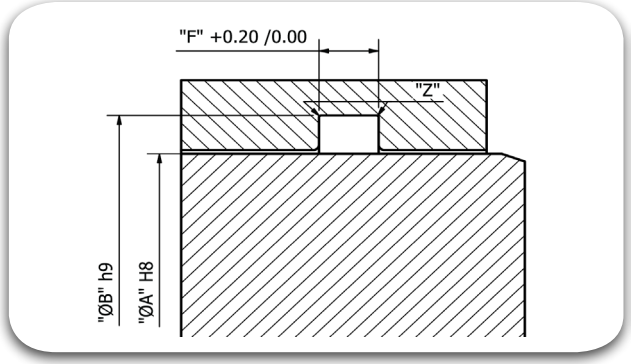

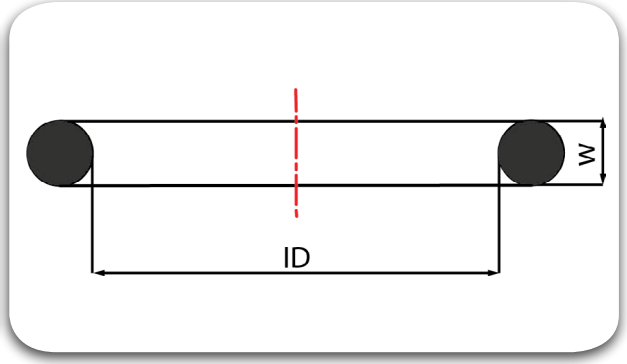

Rod Ø "A" mm	O-Ring Dimensions					Groove Dimensions					Radius		TRIADA® Part Number
	Part No.	Inner Dia. I.D		Width "W"		Groove Dia. ØB		Groove Width without back-up ring	Groove Width with 1 back-up ring	Groove Width with 2 back-up ring	Without back-up ring	With back-up ring	
		I.D mm	Tol ±mm	W mm	Tol ±mm	B mm	Tol ±mm	"F" mm	"F" mm	"F" mm	"Z" mm	"Z" mm	
38.00	29.00	37.82	0.33	1.78	0.08	40.90	0.05	2.20	3.60	5.00	0.40	0.20	OME03782 0178 T571
	128.00	37.77	0.30	2.62	0.08	42.50	0.10	3.10	4.50	5.90	0.60	0.30	OME03777 0262 T571
	222.00	37.69	0.38	3.53	0.10	44.20	0.10	4.20	5.60	7.00	1.00	0.40	OME03769 0353 T571
	325.00	37.47	0.38	5.33	0.13	47.40	0.15	6.20	7.90	9.60	1.20	0.60	OME03747 0533 T571
40.00	30.00	41.00	0.33	1.78	0.08	42.90	0.05	2.20	3.60	5.00	0.40	0.20	OME04100 0178 T571
	129.00	39.34	0.38	2.62	0.08	44.50	0.10	3.10	4.50	5.90	0.60	0.30	OME03934 0262 T571
	223.00	40.87	0.38	3.53	0.10	46.20	0.10	4.20	5.60	7.00	1.00	0.40	OME04087 0353 T571
	326.00	40.64	0.38	5.33	0.13	49.40	0.15	6.20	7.90	9.60	1.20	0.60	OME04064 0533 T571
42.00	131.00	42.52	0.38	2.62	0.08	46.50	0.10	3.10	4.50	5.90	0.60	0.30	OME04252 0262 T571
	327.00	43.82	0.38	5.33	0.13	51.40	0.15	6.20	7.90	9.60	1.20	0.60	OME04382 0533 T571
44.00	31.00	44.17	0.38	1.78	0.08	46.90	0.05	2.20	3.60	5.00	0.40	0.20	OME04417 0178 T571
	132.00	44.12	0.38	2.62	0.08	48.50	0.10	3.10	4.50	5.90	0.60	0.30	OME04412 0262 T571
	224.00	44.04	0.38	3.53	0.10	50.20	0.10	4.20	5.60	7.00	1.00	0.40	OME04404 0353 T571
	327.00	43.82	0.38	5.33	0.13	53.40	0.15	6.20	7.90	9.60	1.20	0.60	OME04382 0533 T571
45.00	133.00	45.69	0.38	2.62	0.08	49.50	0.10	3.10	4.50	5.90	0.60	0.30	OME04569 0262 T571
	224.00	44.04	0.38	3.53	0.10	51.20	0.10	4.20	5.60	7.00	1.00	0.40	OME04404 0353 T571
	328.00	47.00	0.38	5.33	0.13	54.40	0.15	6.20	7.90	9.60	1.20	0.60	OME04700 0533 T571

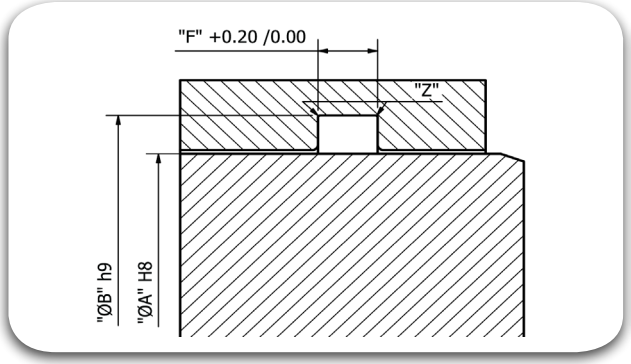

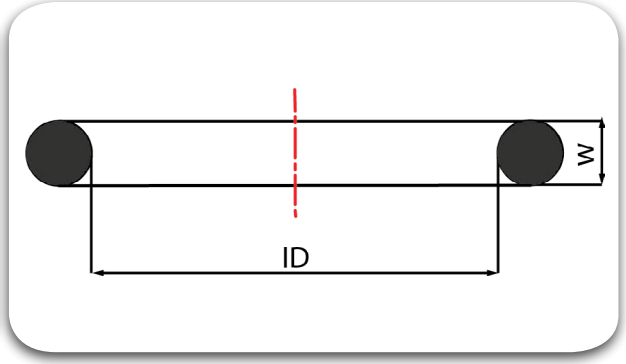

Rod Ø "A" mm	O-Ring Dimensions					Groove Dimensions					Radius		TRIADA® Part Number
	Part No.	Inner Dia. I.D		Width "W"		Groove Dia. ØB		Groove Width without back-up ring	Groove Width with 1 back-up ring	Groove Width with 2 back-up ring	Without back-up ring	With back-up ring	
		I.D mm	Tol ±mm	W mm	Tol ±mm	B mm	Tol ±mm	"F" mm	"F" mm	"F" mm	"Z" mm	"Z" mm	
47.00	32.00	47.35	0.38	1.78	0.08	49.90	0.05	2.20	3.60	5.00	0.40	0.20	OME04735 0178 T571
	134.00	47.29	0.38	2.62	0.08	51.50	0.10	3.10	4.50	5.90	0.60	0.30	OME04729 0262 T571
	225.00	47.22	0.46	3.53	0.10	53.20	0.10	4.20	5.60	7.00	1.00	0.40	OME04722 0353 T571
	328.00	47.00	0.38	5.33	0.13	56.40	0.15	6.20	7.90	9.60	1.20	0.60	OME04700 0533 T571
50.00	33.00	50.52	0.46	1.78	0.08	52.90	0.05	2.20	3.60	5.00	0.40	0.20	OME05052 0178 T571
	136.00	50.47	0.43	2.62	0.08	54.50	0.10	3.10	4.50	5.90	0.60	0.30	OME05047 0262 T571
	226.00	50.39	0.46	3.53	0.10	56.20	0.10	4.20	5.60	7.00	1.00	0.40	OME05039 0353 T571
	329.00	50.17	0.46	5.33	0.13	59.40	0.15	6.20	7.90	9.60	1.20	0.60	OME05017 0533 T571
54.00	34.00	53.70	0.46	1.78	0.08	56.90	0.05	2.20	3.60	5.00	0.40	0.20	OME05370 0178 T571
	138.00	53.64	0.43	2.62	0.08	58.50	0.10	3.10	4.50	5.90	0.60	0.30	OME05364 0262 T571
	227.00	53.57	0.46	3.53	0.10	60.20	0.10	4.20	5.60	7.00	1.00	0.40	OME05357 0353 T571
	330.00	53.34	0.46	5.33	0.13	63.40	0.15	6.20	7.90	9.60	1.20	0.60	OME05334 0533 T571
55.00	139.00	55.25	0.43	2.62	0.08	59.50	0.10	3.10	4.50	5.90	0.60	0.30	OME05525 0262 T571
	227.00	53.57	0.46	3.53	0.10	61.20	0.10	4.20	5.60	7.00	1.00	0.40	OME05357 0353 T571
	331.00	56.52	0.46	5.33	0.13	64.40	0.15	6.20	7.90	9.60	1.20	0.60	OME05652 0533 T571

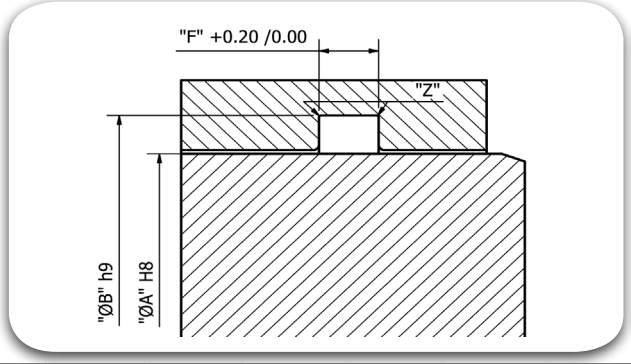

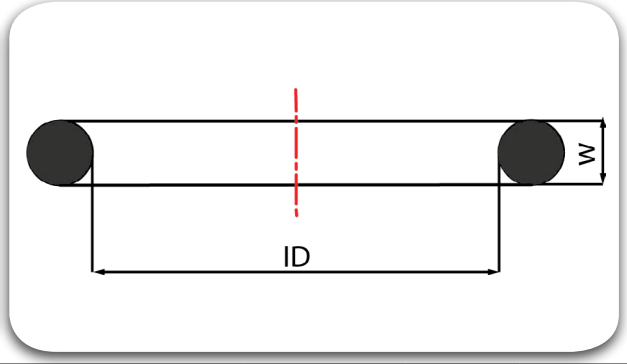

Rod Ø "A" mm	O-Ring Dimensions					Groove Dimensions					Radius		TRIADA® Part Number
	Part No.	Inner Dia. I.D		Width "W"		Groove Dia. ØB		Groove Width without back-up ring	Groove Width with 1 back-up ring	Groove Width with 2 back-up ring	Without back-up ring	With back-up ring	
		I.D mm	Tol ±mm	W mm	Tol ±mm	B mm	Tol ±mm	"F" mm	"F" mm	"F" mm	"Z" mm	"Z" mm	
56.00	35.00	56.87	0.46	1.78	0.08	58.90	0.05	2.20	3.60	5.00	0.40	0.20	OME05687 0178 T571
	140.00	56.82	0.47	2.62	0.08	60.50	0.10	3.10	4.50	5.90	0.60	0.30	OME05682 0262 T571
	228.00	56.74	0.51	3.53	0.10	62.20	0.10	4.20	5.60	7.00	1.00	0.40	OME05674 0353 T571
	331.00	56.52	0.46	5.33	0.13	65.40	0.15	6.20	7.90	9.60	1.20	0.60	OME05652 0533 T571
60.00	36.00	60.05	0.46	1.78	0.08	62.90	0.05	2.20	3.60	5.00	0.40	0.20	OME06005 0178 T571
	142.00	59.99	0.51	2.62	0.08	64.50	0.10	3.10	4.50	5.90	0.60	0.30	OME05999 0262 T571
	229.00	59.92	0.51	3.53	0.10	66.20	0.10	4.20	5.60	7.00	1.00	0.40	OME05992 0353 T571
	332.00	59.69	0.46	5.33	0.13	69.40	0.15	6.20	7.90	9.60	1.20	0.60	OME05969 0533 T571
63.00	37.00	63.22	0.46	1.78	0.08	65.90	0.05	2.20	3.60	5.00	0.40	0.20	OME06322 0178 T571
	144.00	63.17	0.51	2.62	0.08	67.50	0.10	3.10	4.50	5.90	0.60	0.30	OME06317 0262 T571
	230.00	63.07	0.51	3.53	0.10	69.20	0.10	4.20	5.60	7.00	1.00	0.40	OME06307 0353 T571
	333.00	62.87	0.51	5.33	0.13	72.40	0.15	6.20	7.90	9.60	1.20	0.60	OME06287 0533 T571
65.00	145.00	64.77	0.51	2.62	0.08	69.50	0.10	3.10	4.50	5.90	0.60	0.30	OME06477 0262 T571
	231.00	66.27	0.51	3.53	0.10	71.20	0.10	4.20	5.60	7.00	1.00	0.40	OME06627 0353 T571
	334.00	66.04	0.51	5.33	0.13	74.40	0.15	6.20	7.90	9.60	1.20	0.60	OME06604 0533 T571
66.00	38.00	66.40	0.51	1.78	0.08	68.90	0.05	2.20	3.60	5.00	0.40	0.20	OME06640 0178 T571
	146.00	66.34	0.51	2.62	0.08	70.50	0.10	3.10	4.50	5.90	0.60	0.30	OME06634 0262 T571
	231.00	66.27	0.51	3.53	0.10	72.20	0.10	4.20	5.60	7.00	1.00	0.40	OME06627 0353 T571
	334.00	66.04	0.51	5.33	0.13	75.40	0.15	6.20	7.90	9.60	1.20	0.60	OME06604 0533 T571

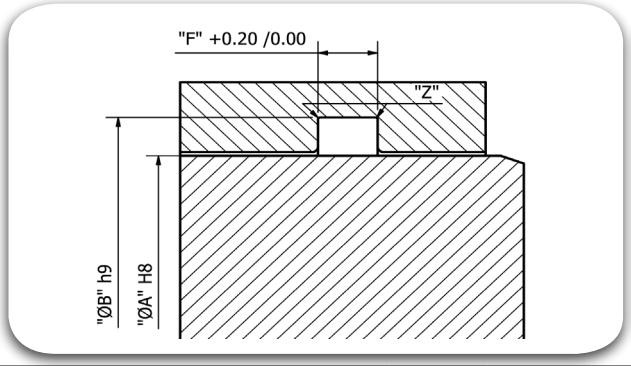

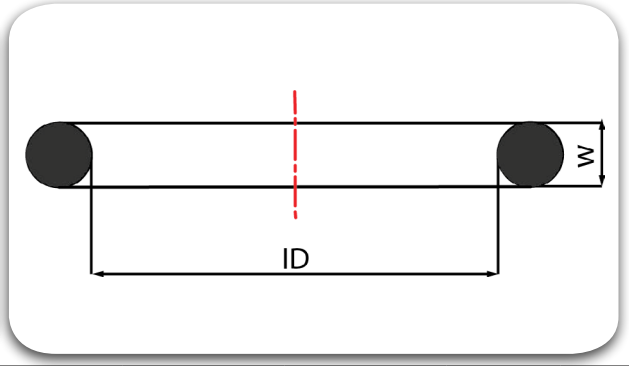

Rod Ø "A" mm	O-Ring Dimensions					Groove Dimensions					Radius		TRIADA® Part Number
	Part No.	Inner Dia. I.D		Width "W"		Groove Dia. ØB		Groove Width without back-up ring	Groove Width with 1 back-up ring	Groove Width with 2 back-up ring	Without back-up ring	With back-up ring	
		I.D mm	Tol ±mm	W mm	Tol ±mm	B mm	Tol ±mm	"F" mm	"F" mm	"F" mm	"Z" mm	"Z" mm	
70.00	39.00	69.57	0.51	1.78	0.08	72.90	0.05	2.20	3.60	5.00	0.40	0.20	OME06957 0178 T571
	148.00	69.52	0.56	2.62	0.08	74.50	0.10	3.10	4.50	5.90	0.60	0.30	OME06952 0262 T571
	232.00	69.44	0.61	3.53	0.10	76.20	0.10	4.20	5.60	7.00	1.00	0.40	OME06944 0353 T571
	335.00	69.22	0.51	5.33	0.13	79.40	0.15	6.20	7.90	9.60	1.20	0.60	OME06922 0533 T571
73.00	40.00	72.75	0.51	1.78	0.08	75.90	0.05	2.20	3.60	5.00	0.40	0.20	OME07275 0178 T571
	150.00	72.69	0.56	2.62	0.08	77.50	0.10	3.10	4.50	5.90	0.60	0.30	OME07269 0262 T571
	233.00	72.62	0.61	3.53	0.10	79.20	0.10	4.20	5.60	7.00	1.00	0.40	OME07262 0353 T571
	336.00	72.39	0.51	5.33	0.13	82.40	0.15	6.20	7.90	9.60	1.20	0.60	OME07239 0533 T571
75.00	41.00	75.92	0.61	1.78	0.08	77.90	0.05	2.20	3.60	5.00	0.40	0.20	OME07592 0178 T571
	151.00	75.87	0.61	2.62	0.08	79.50	0.10	3.10	4.50	5.90	0.60	0.30	OME07587 0262 T571
	234.00	75.79	0.61	3.53	0.10	81.20	0.10	4.20	5.60	7.00	1.00	0.40	OME07579 0353 T571
	337.00	75.57	0.61	5.33	0.13	84.40	0.15	6.20	7.90	9.60	1.20	0.60	OME07557 0533 T571
80.00	42.00	82.27	0.61	1.78	0.08	82.90	0.05	2.20	3.60	5.00	0.40	0.20	OME08227 0178 T571
	152.00	82.22	0.61	2.62	0.08	84.50	0.10	3.10	4.50	5.90	0.60	0.30	OME08222 0262 T571
	236.00	82.15	0.61	3.53	0.10	86.20	0.10	4.20	5.60	7.00	1.00	0.40	OME08215 0353 T571
	339.00	81.92	0.61	5.33	0.13	89.40	0.15	6.20	7.90	9.60	1.20	0.60	OME08192 0533 T571
85.00	237.00	85.32	0.61	3.53	0.10	91.20	0.10	4.20	5.60	7.00	1.00	0.40	OME08532 0353 T571
	340.00	85.09	0.61	5.33	0.13	94.40	0.15	6.20	7.90	9.60	1.20	0.60	OME08509 0533 T571

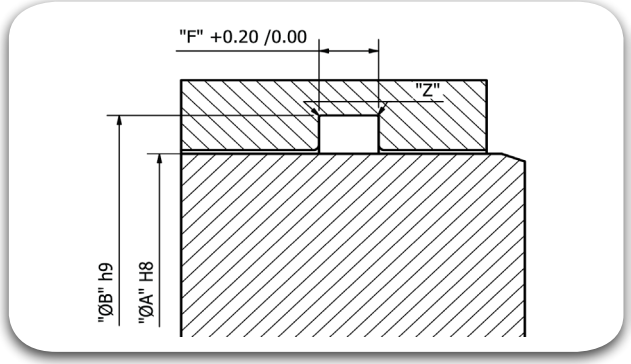

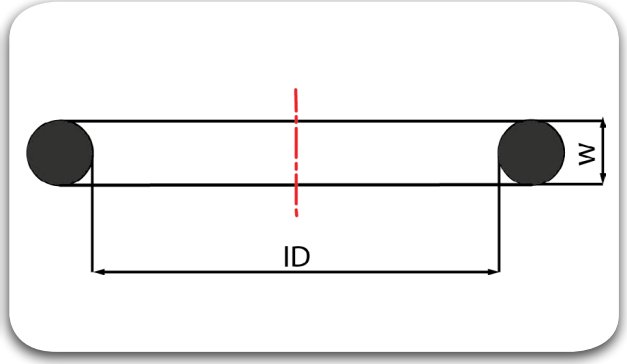

Rod Ø "A" mm	O-Ring Dimensions					Groove Dimensions					Radius		TRIADA® Part Number
	Part No.	Inner Dia. I.D		Width "W"		Groove Dia. ØB		Groove Width without back-up ring	Groove Width with 1 back-up ring	Groove Width with 2 back-up ring	Without back-up ring	With back-up ring	
		I.D mm	Tol ±mm	W mm	Tol ±mm	B mm	Tol ±mm	"F" mm	"F" mm	"F" mm	"Z" mm	"Z" mm	
88.00	43.00	88.62	0.61	1.78	0.08	90.90	0.05	2.20	3.60	5.00	0.40	0.20	OME08862 0178 T571
	153.00	88.57	0.61	2.62	0.08	92.50	0.10	3.10	4.50	5.90	0.60	0.30	OME08857 0262 T571
	238.00	88.49	0.61	3.53	0.10	94.20	0.10	4.20	5.60	7.00	1.00	0.40	OME08849 0353 T571
	341.00	88.27	0.61	5.33	0.13	97.40	0.15	6.20	7.90	9.60	1.20	0.60	OME08827 0533 T571
90.00	239.00	91.67	0.71	3.53	0.10	96.20	0.10	4.20	5.60	7.00	1.00	0.40	OME09167 0353 T571
	342.00	91.44	0.71	5.33	0.13	99.40	0.15	6.20	7.90	9.60	1.20	0.60	OME09144 0533 T571
95.00	44.00	94.97	0.69	1.78	0.08	97.90	0.05	2.20	3.60	5.00	0.40	0.20	OME09497 0178 T571
	154.00	94.92	0.71	2.62	0.08	99.50	0.10	3.10	4.50	5.90	0.60	0.30	OME09492 0262 T571
	240.00	94.84	0.71	3.53	0.10	101.20	0.10	4.20	5.60	7.00	1.00	0.40	OME09484 0353 T571
	343.00	94.62	0.71	5.33	0.13	104.40	0.15	6.20	7.90	9.60	1.20	0.60	OME09462 0533 T571
98.00	241.00	98.02	0.71	3.53	0.10	104.20	0.10	4.20	5.60	7.00	1.00	0.40	OME09802 0353 T571
	344.00	97.79	0.71	5.33	0.13	107.40	0.15	6.20	7.90	9.60	1.20	0.60	OME09779 0533 T571
100.00	45.00	101.32	0.69	1.78	0.08	102.90	0.05	2.20	3.60	5.00	0.40	0.20	OME10132 0178 T571
	155.00	101.27	0.71	2.62	0.08	104.50	0.10	3.10	4.50	5.90	0.60	0.30	OME10127 0262 T571
	242.00	101.19	0.71	3.53	0.10	106.20	0.10	4.20	5.60	7.00	1.00	0.40	OME10119 0353 T571
	345.00	100.97	0.71	5.33	0.13	109.40	0.15	6.20	7.90	9.60	1.20	0.60	OME10097 0533 T571
105.00	243.00	104.37	0.71	3.53	0.10	111.20	0.10	4.20	5.60	7.00	1.00	0.40	OME10437 0353 T571
	346.00	104.14	0.71	5.33	0.13	114.40	0.15	6.20	7.90	9.60	1.20	0.60	OME10414 0533 T571

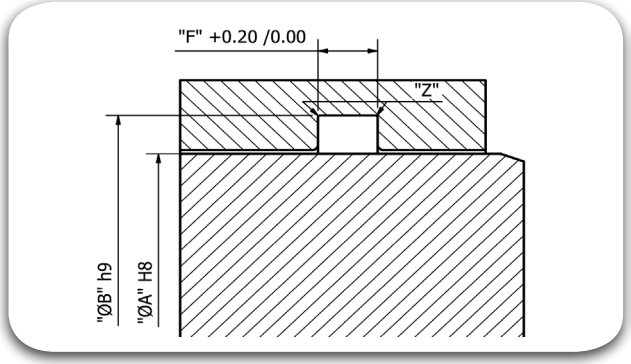

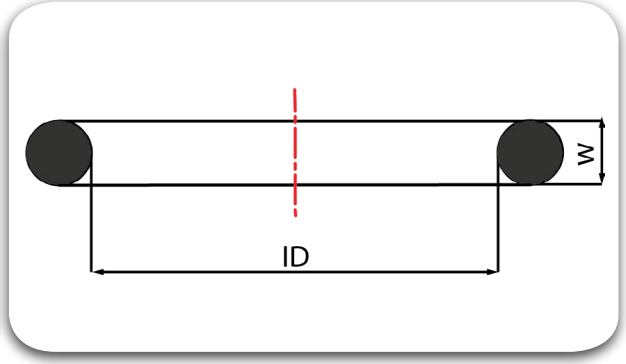

Rod Ø "A" mm	O-Ring Dimensions					Groove Dimensions					Radius		TRIADA® Part Number
	Part No.	Inner Dia. I.D		Width "W"		Groove Dia. ØB		Groove Width without back-up ring	Groove Width with 1 back-up ring	Groove Width with 2 back-up ring	Without back-up ring	With back-up ring	
		I.D mm	Tol ±mm	W mm	Tol ±mm	B mm	Tol ±mm	"F" mm	"F" mm	"F" mm	"Z" mm	"Z" mm	
108.00	46.00	107.67	0.76	1.78	0.08	110.90	0.05	2.20	3.60	5.00	0.40	0.20	OME10767 0178 T571
	156.00	107.62	0.76	2.62	0.08	112.50	0.10	3.10	4.50	5.90	0.60	0.30	OME10762 0262 T571
	244.00	107.54	0.76	3.53	0.10	114.20	0.10	4.20	5.60	7.00	1.00	0.40	OME10754 0353 T571
	347.00	107.32	0.76	5.33	0.13	117.40	0.15	6.20	7.90	9.60	1.20	0.60	OME10732 0533 T571
110.00	245.00	110.72	0.76	3.53	0.10	116.20	0.10	4.20	5.60	7.00	1.00	0.40	OME11072 0353 T571
	348.00	110.49	0.76	5.33	0.13	119.40	0.15	6.20	7.90	9.60	1.20	0.60	OME11049 0533 T571
115.00	47.00	114.02	0.76	1.78	0.08	117.90	0.05	2.20	3.60	5.00	0.40	0.20	OME11402 0178 T571
	157.00	113.97	0.76	2.62	0.08	119.50	0.10	3.10	4.50	5.90	0.60	0.30	OME11397 0262 T571
	246.00	113.89	0.76	3.53	0.10	121.20	0.10	4.20	5.60	7.00	1.00	0.40	OME11389 0353 T571
	349.00	113.67	0.76	5.33	0.13	124.40	0.15	6.20	7.90	9.60	1.20	0.60	OME11367 0533 T571
	425.00	113.67	0.84	7.00	0.15	127.20	0.15	8.20	10.70	13.20	1.50	0.60	OME11367 0700 T571
118.00	247.00	117.07	0.76	3.53	0.10	124.20	0.10	4.20	5.60	7.00	1.00	0.40	OME11707 0353 T571
	350.00	116.64	0.76	5.33	0.13	127.40	0.15	6.20	7.90	9.60	1.20	0.60	OME11664 0533 T571
	426.00	116.84	0.84	7.00	0.15	130.20	0.15	8.20	10.70	13.20	1.50	0.60	OME11684 0700 T571
120.00	48.00	120.37	0.76	1.78	0.08	122.90	0.05	2.20	3.60	5.00	0.40	0.20	OME12037 0178 T571
	158.00	120.32	0.76	2.62	0.08	124.50	0.10	3.10	4.50	5.90	0.60	0.30	OME12032 0262 T571
	248.00	120.24	0.76	3.53	0.10	126.20	0.10	4.20	5.60	7.00	1.00	0.40	OME12024 0353 T571
	351.00	120.02	0.76	5.33	0.13	129.40	0.15	6.20	7.90	9.60	1.20	0.60	OME12002 0533 T571
	427.00	120.02	0.84	7.00	0.15	132.20	0.15	8.20	10.70	13.20	1.50	0.60	OME12002 0700 T571

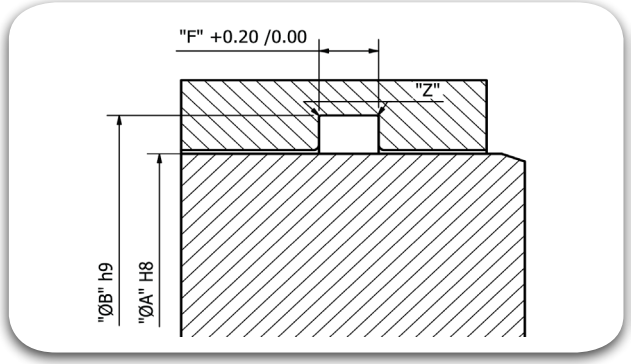

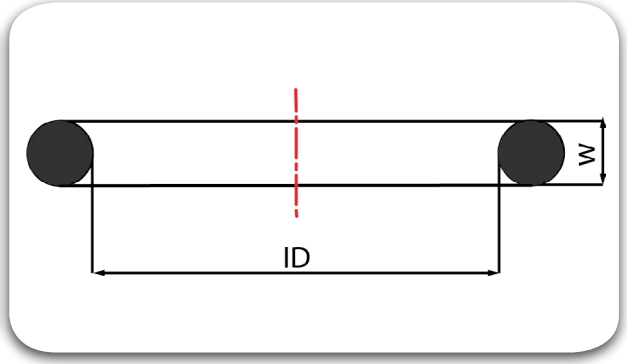

Rod Ø "A" mm	O-Ring Dimensions					Groove Dimensions					Radius		TRIADA® Part Number
	Part No.	Inner Dia. I.D		Width "W"		Groove Dia. ØB		Groove Width without back-up ring	Groove Width with 1 back-up ring	Groove Width with 2 back-up ring	Without back-up ring	With back-up ring	
		I.D mm	Tol ±mm	W mm	Tol ±mm	B mm	Tol ±mm	"F" mm	"F" mm	"F" mm	"Z" mm	"Z" mm	
122.00	249.00	123.42	0.89	3.53	0.10	128.20	0.10	4.20	5.60	7.00	1.00	0.40	OME12342 0353 T571
	352.00	123.19	0.76	5.33	0.13	131.40	0.15	6.20	7.90	9.60	1.20	0.60	OME12319 0533 T571
	428.00	123.19	0.84	7.00	0.15	134.20	0.15	8.20	10.70	13.20	1.50	0.60	OME12319 0700 T571
125.00	49.00	126.72	0.94	1.78	0.08	127.90	0.05	2.20	3.60	5.00	0.40	0.20	OME12672 0178 T571
	159.00	126.67	0.89	2.62	0.08	129.50	0.10	3.10	4.50	5.90	0.60	0.30	OME12667 0262 T571
	250.00	126.59	0.89	3.53	0.10	131.20	0.10	4.20	5.60	7.00	1.00	0.40	OME12659 0353 T571
	353.00	126.37	0.76	5.33	0.13	134.40	0.15	6.20	7.90	9.60	1.20	0.60	OME12637 0533 T571
	429.00	126.37	0.94	7.00	0.15	137.20	0.15	8.20	10.70	13.20	1.50	0.60	OME12637 0700 T571
130.00	251.00	129.77	0.89	3.53	0.10	136.20	0.10	4.20	5.60	7.00	1.00	0.40	OME12977 0353 T571
	354.00	129.54	0.90	5.33	0.13	139.40	0.15	6.20	7.90	9.60	1.20	0.60	OME12954 0533 T571
	430.00	129.54	0.94	7.00	0.15	142.20	0.15	8.20	10.70	13.20	1.50	0.60	OME12954 0700 T571
132.00	50.00	133.07	0.94	1.78	0.08	134.90	0.05	2.20	3.60	5.00	0.40	0.20	OME13307 0178 T571
	160.00	133.02	0.89	2.62	0.08	136.50	0.10	3.10	4.50	5.90	0.60	0.30	OME13302 0262 T571
	252.00	132.94	0.89	3.53	0.10	138.20	0.10	4.20	5.60	7.00	1.00	0.40	OME13294 0353 T571
	355.00	132.72	0.90	5.33	0.13	141.40	0.15	6.20	7.90	9.60	1.20	0.60	OME13272 0533 T571
	431.00	132.72	0.94	7.00	0.15	144.20	0.15	8.20	10.70	13.20	1.50	0.60	OME13272 0700 T571
136.00	253.00	136.12	0.89	3.53	0.10	142.20	0.10	4.20	5.60	7.00	1.00	0.40	OME13612 0353 T571
	356.00	135.89	0.90	5.33	0.13	145.40	0.15	6.20	7.90	9.60	1.20	0.60	OME13589 0533 T571
	432.00	135.89	0.94	7.00	0.15	148.20	0.15	8.20	10.70	13.20	1.50	0.60	OME13589 0700 T571

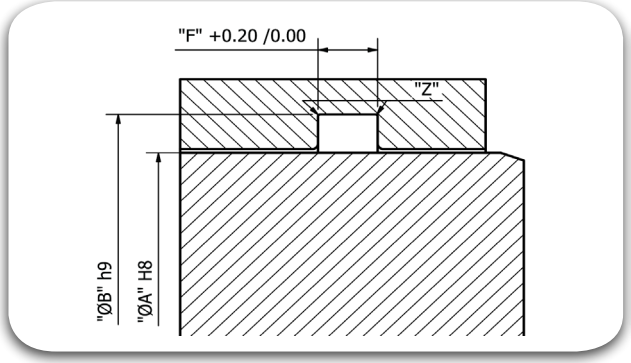

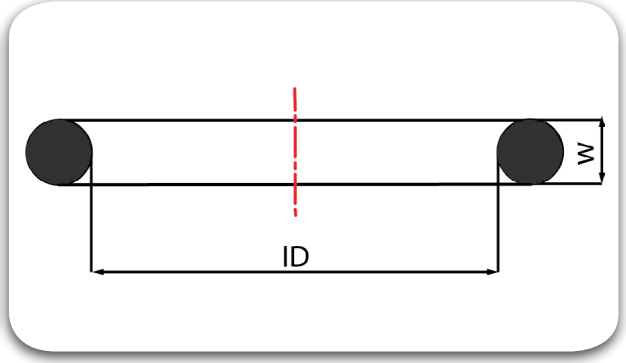

Rod Ø "A" mm	O-Ring Dimensions					Groove Dimensions					Radius		TRIADA® Part Number
	Part No.	Inner Dia. I.D		Width "W"		Groove Dia. ØB		Groove Width without back-up ring	Groove Width with 1 back-up ring	Groove Width with 2 back-up ring	Without back-up ring	With back-up ring	
		I.D mm	Tol ±mm	W mm	Tol ±mm	B mm	Tol ±mm	"F" mm	"F" mm	"F" mm	"Z" mm	"Z" mm	
140.00	161.00	139.37	0.89	2.62	0.08	144.50	0.10	3.10	4.50	5.90	0.60	0.30	OME13937 0262 T571
	254.00	139.29	0.89	3.53	0.10	146.20	0.10	4.20	5.60	7.00	1.00	0.40	OME13929 0353 T571
	357.00	139.07	0.90	5.33	0.13	149.40	0.15	6.20	7.90	9.60	1.20	0.60	OME13907 0533 T571
	433.00	139.07	0.94	7.00	0.15	152.20	0.15	8.20	10.70	13.20	1.50	0.60	OME13907 0700 T571
142.00	255.00	142.47	0.89	3.53	0.10	148.20	0.10	4.20	5.60	7.00	1.00	0.40	OME14247 0353 T571
	358.00	142.24	0.90	5.33	0.13	151.40	0.15	6.20	7.90	9.60	1.20	0.60	OME14224 0533 T571
	434.00	142.24	0.94	7.00	0.15	154.20	0.15	8.20	10.70	13.20	1.50	0.60	OME14224 0700 T571
145.00	162.00	145.72	0.89	2.62	0.08	149.50	0.10	3.10	4.50	5.90	0.60	0.30	OME14572 0262 T571
	256.00	145.64	0.89	3.53	0.10	151.20	0.10	4.20	5.60	7.00	1.00	0.40	OME14564 0353 T571
	359.00	145.42	0.90	5.33	0.13	154.40	0.15	6.20	7.90	9.60	1.20	0.60	OME14542 0533 T571
	435.00	145.42	0.94	7.00	0.15	157.20	0.15	8.20	10.70	13.20	1.50	0.60	OME14542 0700 T571
148.00	257.00	148.82	0.89	3.53	0.10	154.20	0.10	4.20	5.60	7.00	1.00	0.40	OME14882 0353 T571
	360.00	148.49	0.90	5.33	0.13	157.40	0.15	6.20	7.90	9.60	1.20	0.60	OME14849 0533 T571
	436.00	148.59	0.94	7.00	0.15	160.20	0.15	8.20	10.70	13.20	1.50	0.60	OME14859 0700 T571
150.00	163.00	152.07	0.89	2.62	0.08	154.50	0.10	3.10	4.50	5.90	0.60	0.30	OME15207 0262 T571
	258.00	151.99	0.89	3.53	0.10	156.20	0.10	4.20	5.60	7.00	1.00	0.40	OME15199 0353 T571
	361.00	151.77	0.90	5.33	0.13	159.40	0.15	6.20	7.90	9.60	1.20	0.60	OME15177 0533 T571
	437.00	151.77	0.94	7.00	0.15	162.20	0.15	8.20	10.70	13.20	1.50	0.60	OME15177 0700 T571

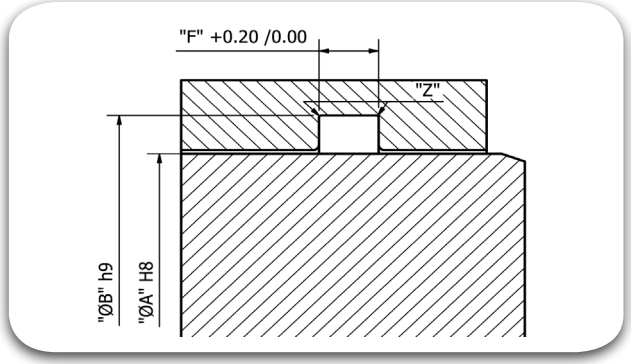

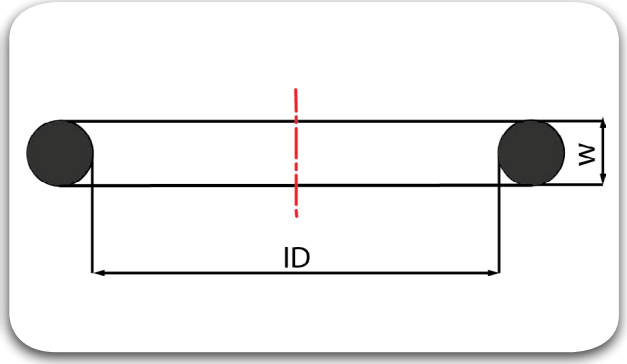

Rod Ø "A" mm	O-Ring Dimensions					Groove Dimensions					Radius		TRIADA® Part Number
	Part No.	Inner Dia. I.D		Width "W"		Groove Dia. ØB		Groove Width without back-up ring	Groove Width with 1 back-up ring	Groove Width with 2 back-up ring	Without back-up ring	With back-up ring	
		I.D mm	Tol ±mm	W mm	Tol ±mm	B mm	Tol ±mm	"F" mm	"F" mm	"F" mm	"Z" mm	"Z" mm	
160.00	164.00	158.42	1.02	2.62	0.08	164.50	0.10	3.10	4.50	5.90	0.60	0.30	OME15842 0262 T571
	259.00	158.34	1.02	3.53	0.10	166.20	0.10	4.20	5.60	7.00	1.00	0.40	OME15834 0353 T571
	362.00	158.12	0.90	5.33	0.13	169.40	0.15	6.20	7.90	9.60	1.20	0.60	OME15812 0533 T571
	438.00	158.12	1.02	7.00	0.15	172.20	0.15	8.20	10.70	13.20	1.50	0.60	OME15812 0700 T571
165.00	165.00	164.77	1.02	2.62	0.08	169.50	0.10	3.10	4.50	5.90	0.60	0.30	OME16477 0262 T571
	260.00	164.69	1.02	3.53	0.10	171.20	0.10	4.20	5.60	7.00	1.00	0.40	OME16469 0353 T571
	363.00	164.47	0.90	5.33	0.13	174.40	0.15	6.20	7.90	9.60	1.20	0.60	OME16447 0533 T571
	439.00	164.47	1.02	7.00	0.15	177.20	0.15	8.20	10.70	13.20	1.50	0.60	OME16447 0700 T571
170.00	166.00	171.12	1.02	2.62	0.08	174.50	0.10	3.10	4.50	5.90	0.60	0.30	OME17112 0262 T571
	261.00	171.04	1.02	3.53	0.10	176.20	0.10	4.20	5.60	7.00	1.00	0.40	OME17104 0353 T571
	364.00	170.82	0.90	5.33	0.13	179.40	0.15	6.20	7.90	9.60	1.20	0.60	OME17082 0533 T571
	440.00	170.82	1.02	7.00	0.15	182.20	0.15	8.20	10.70	13.20	1.50	0.60	OME17082 0700 T571
175.00	167.00	177.47	1.02	2.62	0.08	179.50	0.10	3.10	4.50	5.90	0.60	0.30	OME17747 0262 T571
	262.00	177.39	1.02	3.53	0.10	181.20	0.10	4.20	5.60	7.00	1.00	0.40	OME17739 0353 T571
	365.00	177.17	0.90	5.33	0.13	184.40	0.15	6.20	7.90	9.60	1.20	0.60	OME17717 0533 T571
	441.00	177.17	1.02	7.00	0.15	187.20	0.15	8.20	10.70	13.20	1.50	0.60	OME17717 0700 T571

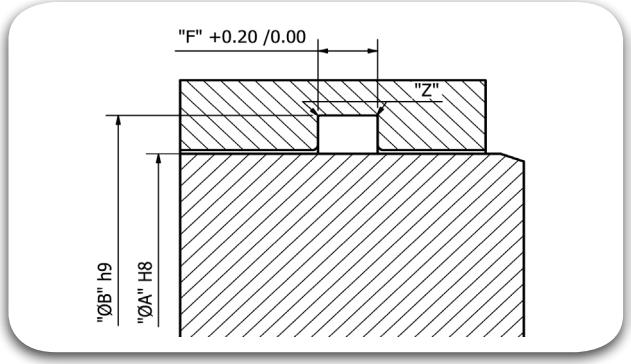

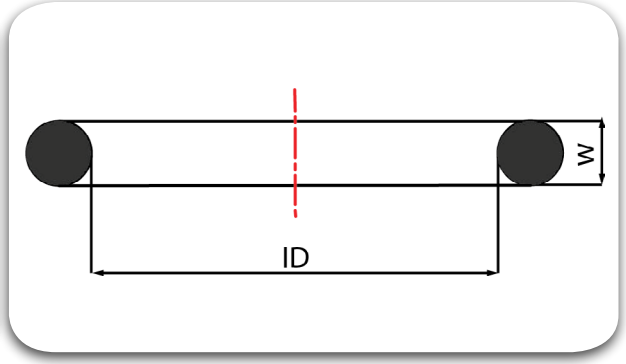

Rod Ø "A" mm	O-Ring Dimensions					Groove Dimensions					Radius		TRIADA® Part Number
	Part No.	Inner Dia. I.D		Width "W"		Groove Dia. ØB		Groove Width without back-up ring	Groove Width with 1 back-up ring	Groove Width with 2 back-up ring	Without back-up ring	With back-up ring	
		I.D mm	Tol ±mm	W mm	Tol ±mm	B mm	Tol ±mm	"F" mm	"F" mm	"F" mm	"Z" mm	"Z" mm	
180.00	168.00	183.82	1.14	2.62	0.08	184.50	0.10	3.10	4.50	5.90	0.60	0.30	OME18382 0262 T571
	263.00	183.74	1.14	3.53	0.10	186.20	0.10	4.20	5.60	7.00	1.00	0.40	OME18374 0353 T571
	366.00	183.52	1.25	5.33	0.13	189.40	0.15	6.20	7.90	9.60	1.20	0.60	OME18352 0533 T571
	442.00	183.52	1.14	7.00	0.15	192.20	0.15	8.20	10.70	13.20	1.50	0.60	OME18352 0700 T571
190.00	169.00	190.17	1.14	2.62	0.08	194.50	0.10	3.10	4.50	5.90	0.60	0.30	OME19017 0262 T571
	264.00	190.09	1.14	3.53	0.10	196.20	0.10	4.20	5.60	7.00	1.00	0.40	OME19009 0353 T571
	367.00	189.87	1.25	5.33	0.13	199.40	0.15	6.20	7.90	9.60	1.20	0.60	OME18987 0533 T571
	443.00	189.87	1.14	7.00	0.15	202.20	0.15	8.20	10.70	13.20	1.50	0.60	OME18987 0700 T571
195.00	170.00	196.52	1.14	2.62	0.08	199.50	0.10	3.10	4.50	5.90	0.60	0.30	OME19652 0262 T571
	265.00	196.44	1.14	3.53	0.10	201.20	0.10	4.20	5.60	7.00	1.00	0.40	OME19644 0353 T571
	368.00	196.22	1.25	5.33	0.13	204.40	0.15	6.20	7.90	9.60	1.20	0.60	OME19622 0533 T571
	444.00	196.22	1.14	7.00	0.15	207.20	0.15	8.20	10.70	13.20	1.50	0.60	OME19622 0700 T571
200.00	171.00	202.87	1.14	2.62	0.08	204.50	0.10	3.10	4.50	5.90	0.60	0.30	OME20287 0262 T571
	266.00	202.79	1.14	3.53	0.10	206.20	0.10	4.20	5.60	7.00	1.00	0.40	OME20279 0353 T571
	369.00	202.57	1.25	5.33	0.13	209.40	0.15	6.20	7.90	9.60	1.20	0.60	OME20257 0533 T571
	445.00	202.57	1.14	7.00	0.15	212.20	0.15	8.20	10.70	13.20	1.50	0.60	OME20257 0700 T571

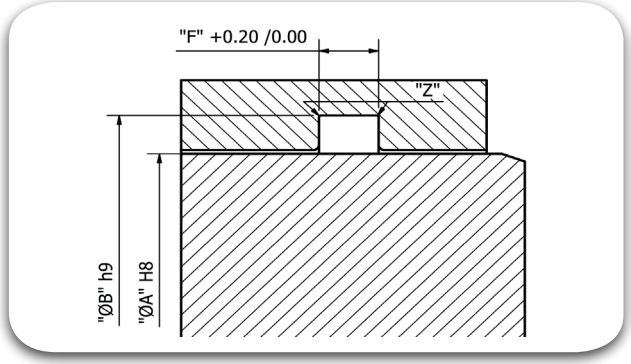

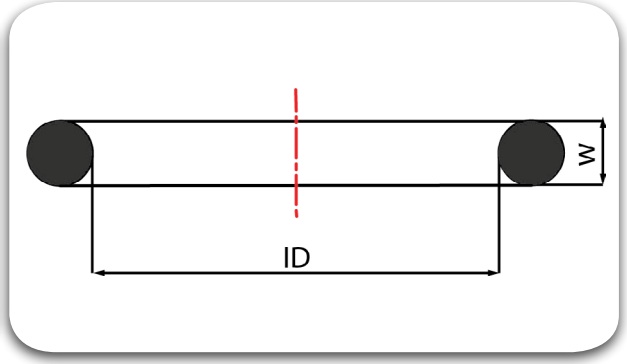

Rod Ø "A" mm	O-Ring Dimensions					Groove Dimensions					Radius		TRIADA® Part Number
	Part No.	Inner Dia. I.D		Width "W"		Groove Dia. ØB		Groove Width without back-up ring	Groove Width with 1 back-up ring	Groove Width with 2 back-up ring	Without back-up ring	With back-up ring	
		I.D mm	Tol ±mm	W mm	Tol ±mm	B mm	Tol ±mm	"F" mm	"F" mm	"F" mm	"Z" mm	"Z" mm	
210.00	172.00	209.22	1.27	2.62	0.08	214.50	0.10	3.10	4.50	5.90	0.60	0.30	OME20922 0262 T571
	267.00	209.14	1.27	3.53	0.10	216.20	0.10	4.20	5.60	7.00	1.00	0.40	OME20914 0353 T571
	370.00	208.92	1.25	5.33	0.13	219.40	0.15	6.20	7.90	9.60	1.20	0.60	OME20892 0533 T571
	446.00	215.27	1.40	7.00	0.15	222.20	0.15	8.20	10.70	13.20	1.50	0.60	OME21527 0700 T571
215.00	173.00	215.57	1.27	2.62	0.08	219.50	0.10	3.10	4.50	5.90	0.60	0.30	OME21557 0262 T571
	268.00	215.49	1.27	3.53	0.10	221.20	0.10	4.20	5.60	7.00	1.00	0.40	OME21549 0353 T571
	371.00	215.27	1.25	5.33	0.13	224.40	0.15	6.20	7.90	9.60	1.20	0.60	OME21527 0533 T571
	446.00	215.27	1.40	7.00	0.15	227.20	0.15	8.20	10.70	13.20	1.50	0.60	OME21527 0700 T571
220.00	174.00	221.92	1.27	2.62	0.08	224.50	0.10	3.10	4.50	5.90	0.60	0.30	OME22192 0262 T571
	269.00	221.84	1.27	3.53	0.10	226.20	0.10	4.20	5.60	7.00	1.00	0.40	OME22184 0353 T571
	372.00	221.62	1.25	5.33	0.13	229.40	0.15	6.20	7.90	9.60	1.20	0.60	OME22162 0533 T571
	447.00	227.97	1.40	7.00	0.15	232.20	0.15	8.20	10.70	13.20	1.50	0.60	OME22797 0700 T571
225.00	175.00	228.27	1.27	2.62	0.08	229.50	0.10	3.10	4.50	5.90	0.60	0.30	OME22827 0262 T571
	270.00	228.19	1.27	3.53	0.10	231.20	0.10	4.20	5.60	7.00	1.00	0.40	OME22819 0353 T571
	373.00	227.97	1.25	5.33	0.13	234.40	0.15	6.20	7.90	9.60	1.20	0.60	OME22797 0533 T571
	447.00	227.97	1.40	7.00	0.15	237.20	0.15	8.20	10.70	13.20	1.50	0.60	OME22797 0700 T571

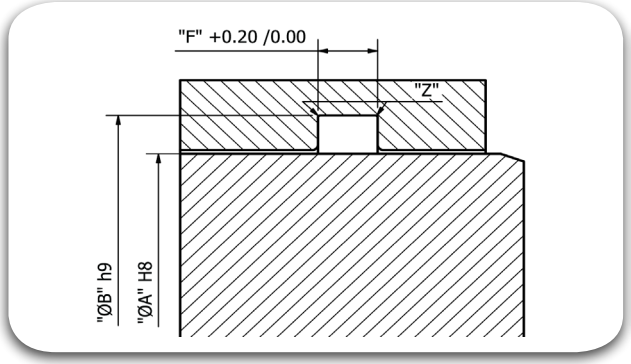

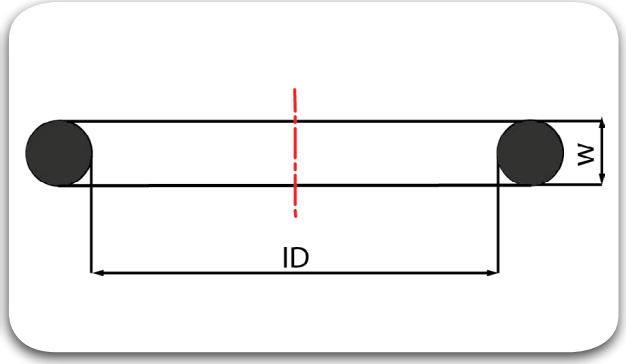

Rod Ø "A" mm	O-Ring Dimensions					Groove Dimensions					Radius		TRIADA® Part Number
	Part No.	Inner Dia. I.D		Width "W"		Groove Dia. ØB		Groove Width without back-up ring	Groove Width with 1 back-up ring	Groove Width with 2 back-up ring	Without back-up ring	With back-up ring	
		I.D mm	Tol ±mm	W mm	Tol ±mm	B mm	Tol ±mm	"F" mm	"F" mm	"F" mm	"Z" mm	"Z" mm	
235.00	176.00	234.62	1.40	2.62	0.08	239.50	0.10	3.10	4.50	5.90	0.60	0.30	OME23462 0262 T571
	271.00	234.54	1.40	3.53	0.10	241.20	0.10	4.20	5.60	7.00	1.00	0.40	OME23454 0353 T571
	374.00	234.32	1.25	5.33	0.13	244.40	0.15	6.20	7.90	9.60	1.20	0.60	OME23432 0533 T571
	448.00	240.67	1.40	7.00	0.15	247.20	0.15	8.20	10.70	13.20	1.50	0.60	OME24067 0700 T571
240.00	177.00	240.97	1.40	2.62	0.08	244.50	0.10	3.10	4.50	5.90	0.60	0.30	OME24097 0262 T571
	272.00	240.89	1.40	3.53	0.10	246.20	0.10	4.20	5.60	7.00	1.00	0.40	OME24089 0353 T571
	375.00	240.67	1.25	5.33	0.13	249.40	0.15	6.20	7.90	9.60	1.20	0.60	OME24067 0533 T571
	448.00	240.67	1.40	7.00	0.15	252.20	0.15	8.20	10.70	13.20	1.50	0.60	OME24067 0700 T571
245.00	273.00	247.24	1.40	3.53	0.10	251.20	0.10	4.20	5.60	7.00	1.00	0.40	OME24724 0353 T571
	376.00	247.02	1.25	5.33	0.13	254.40	0.15	6.20	7.90	9.60	1.20	0.60	OME24702 0533 T571
	449.00	253.37	1.40	7.00	0.15	257.20	0.15	8.20	10.70	13.20	1.50	0.60	OME25337 0700 T571
250.00	274.00	253.59	1.40	3.53	0.10	256.20	0.10	4.20	5.60	7.00	1.00	0.40	OME25359 0353 T571
	377.00	253.37	1.25	5.33	0.13	259.40	0.15	6.20	7.90	9.60	1.20	0.60	OME25337 0533 T571
	449.00	253.37	1.40	7.00	0.15	262.20	0.15	8.20	10.70	13.20	1.50	0.60	OME25337 0700 T571
265.00	275.00	266.29	1.40	3.53	0.10	271.20	0.10	4.20	5.60	7.00	1.00	0.40	OME26629 0353 T571
	378.00	266.07	1.25	5.33	0.13	274.40	0.15	6.20	7.90	9.60	1.20	0.60	OME26607 0533 T571
	450.00	266.07	1.52	7.00	0.15	277.20	0.15	8.20	10.70	13.20	1.50	0.60	OME26607 0700 T571

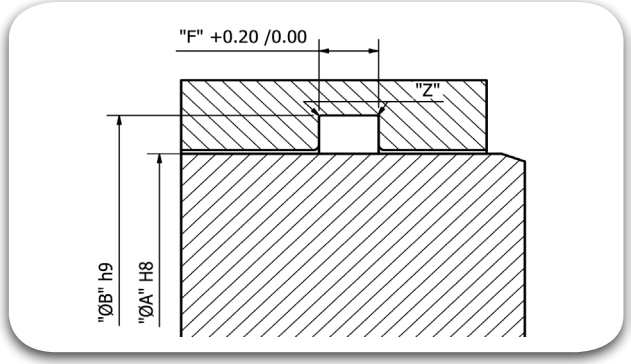

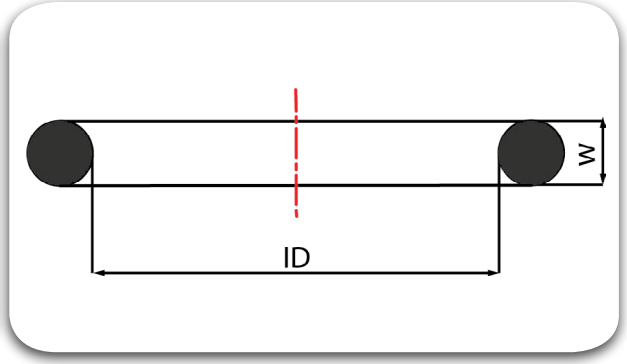

Rod Ø "A" mm	O-Ring Dimensions					Groove Dimensions					Radius		TRIADA® Part Number
	Part No.	Inner Dia. I.D		Width "W"		Groove Dia. ØB		Groove Width without back-up ring	Groove Width with 1 back-up ring	Groove Width with 2 back-up ring	Without back-up ring	With back-up ring	
		I.D mm	Tol ±mm	W mm	Tol ±mm	B mm	Tol ±mm	"F" mm	"F" mm	"F" mm	"Z" mm	"Z" mm	
280.00	276.00	278.99	1.68	3.53	0.10	286.20	0.10	4.20	5.60	7.00	1.00	0.40	OME27899 0353 T571
	379.00	278.77	1.25	5.33	0.13	289.40	0.15	6.20	7.90	9.60	1.20	0.60	OME27877 0533 T571
	451.00	278.77	1.52	7.00	0.15	292.20	0.15	8.20	10.70	13.20	1.50	0.60	OME27877 0700 T571
290.00	277.00	291.69	1.65	3.53	0.10	296.20	0.10	4.20	5.60	7.00	1.00	0.40	OME29169 0353 T571
	380.00	291.47	1.25	5.33	0.13	299.40	0.15	6.20	7.90	9.60	1.20	0.60	OME29147 0533 T571
	452.00	291.47	1.52	7.00	0.15	302.20	0.15	8.20	10.70	13.20	1.50	0.60	OME29147 0700 T571
300.00	278.00	304.39	1.65	3.53	0.10	306.20	0.10	4.20	5.60	7.00	1.00	0.40	OME30439 0353 T571
	381.00	304.17	1.25	5.33	0.13	309.40	0.15	6.20	7.90	9.60	1.20	0.60	OME30417 0533 T571
	453.00	304.17	1.52	7.00	0.15	312.20	0.15	8.20	10.70	13.20	1.50	0.60	OME30417 0700 T571
320.00	279.00	329.79	1.65	3.53	0.10	326.20	0.10	4.20	5.60	7.00	1.00	0.40	OME32979 0353 T571
	382.00	329.57	1.25	5.33	0.13	329.40	0.15	6.20	7.90	9.60	1.20	0.60	OME32957 0533 T571
	455.00	329.57	1.52	7.00	0.15	332.40	0.15	8.20	10.70	13.20	1.50	0.60	OME32957 0700 T571
350.00	280.00	355.19	1.65	3.53	0.10	356.20	0.10	4.20	5.60	7.00	1.00	0.40	OME35519 0353 T571
	383.00	354.97	1.25	5.33	0.13	359.40	0.15	6.20	7.90	9.60	1.20	0.60	OME35497 0533 T571
	457.00	354.97	1.78	7.00	0.15	362.20	0.15	8.20	10.70	13.20	1.50	0.60	OME35497 0700 T571
360.00	280.00	355.19	1.65	3.53	0.10	366.20	0.10	4.20	5.60	7.00	1.00	0.40	OME35519 0353 T571
	383.00	354.97	1.25	5.33	0.13	369.40	0.15	6.20	7.90	9.60	1.20	0.60	OME35497 0533 T571
	458.00	367.67	1.78	7.00	0.15	372.20	0.15	8.20	10.70	13.20	1.50	0.60	OME36767 0700 T571

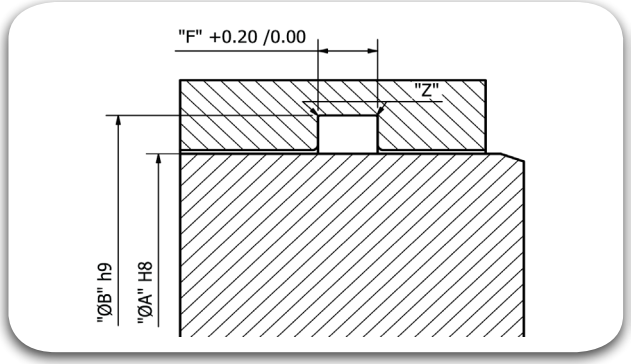

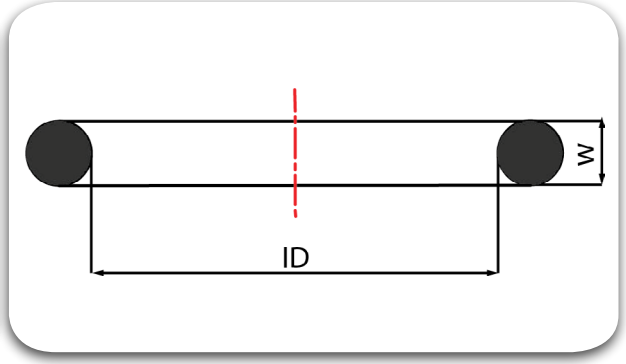

Rod Ø "A" mm	O-Ring Dimensions					Groove Dimensions					Radius		TRIADA® Part Number
	Part No.	Inner Dia. I.D		Width "W"		Groove Dia. ØB		Groove Width without back-up ring	Groove Width with 1 back-up ring	Groove Width with 2 back-up ring	Without back-up ring	With back-up ring	
		I.D mm	Tol ±mm	W mm	Tol ±mm	B mm	Tol ±mm	"F" mm	"F" mm	"F" mm	"Z" mm	"Z" mm	
380.00	281.00	380.59	1.65	3.53	0.10	386.20	0.10	4.20	5.60	7.00	1.00	0.40	OME38059 0353 T571
	384.00	380.37	1.25	5.33	0.13	389.40	0.15	6.20	7.90	9.60	1.20	0.60	OME38037 0533 T571
	459.00	380.37	1.78	7.00	0.15	392.20	0.15	8.20	10.70	13.20	1.50	0.60	OME38037 0700 T571
400.00	282.00	405.26	2.15	3.53	0.10	406.20	0.10	4.20	5.60	7.00	1.00	0.40	OME40526 0353 T571
	385.00	405.26	1.90	5.33	0.13	409.40	0.15	6.20	7.90	9.60	1.20	0.60	OME40526 0533 T571
	461.00	405.26	2.00	7.00	0.15	412.20	0.15	8.20	10.70	13.20	1.50	0.60	OME40526 0700 T571
420.00	282.00	405.26	2.15	3.53	0.10	426.20	0.10	4.20	5.60	7.00	1.00	0.40	OME40526 0353 T571
	385.00	405.26	1.90	5.33	0.13	429.40	0.15	6.20	7.90	9.60	1.20	0.60	OME40526 0533 T571
	462.00	417.96	2.00	7.00	0.15	432.20	0.15	8.20	10.70	13.20	1.50	0.60	OME41796 0700 T571
430.00	283.00	430.66	2.15	3.53	0.10	436.20	0.10	4.20	5.60	7.00	1.00	0.40	OME43066 0353 T571
	386.00	430.65	1.90	5.33	0.13	439.40	0.15	6.20	7.90	9.60	1.20	0.60	OME43065 0533 T571
	463.00	430.65	2.00	7.00	0.15	442.20	0.15	8.20	10.70	13.20	1.50	0.60	OME43065 0700 T571
450.00	284.00	456.06	2.15	3.53	0.10	456.20	0.10	4.20	5.60	7.00	1.00	0.40	OME45606 0353 T571
	387.00	456.06	1.90	5.33	0.13	459.40	0.15	6.20	7.90	9.60	1.20	0.60	OME45606 0533 T571
	465.00	456.06	2.00	7.00	0.15	462.20	0.15	8.20	10.70	13.20	1.50	0.60	OME45606 0700 T571
470.00	387.00	456.06	1.90	5.33	0.13	479.40	0.15	6.20	7.90	9.60	1.20	0.60	OME45606 0533 T571
	466.00	468.76	2.00	7.00	0.15	482.20	0.15	8.20	10.70	13.20	1.50	0.60	OME46876 0700 T571

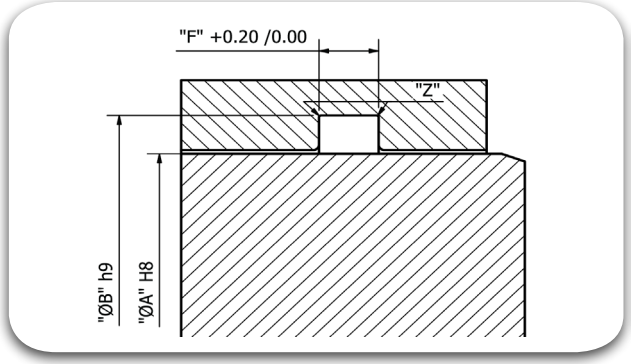

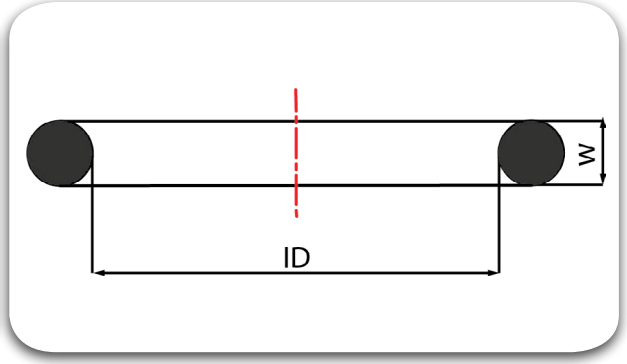

Rod Ø "A" mm	O-Ring Dimensions					Groove Dimensions					Radius		TRIADA® Part Number
	Part No.	Inner Dia. I.D		Width "W"		Groove Dia. ØB		Groove Width without back-up ring	Groove Width with 1 back-up ring	Groove Width with 2 back-up ring	Without back-up ring	With back-up ring	
		I.D mm	Tol ±mm	W mm	Tol ±mm	B mm	Tol ±mm	"F" mm	"F" mm	"F" mm	"Z" mm	"Z" mm	
480.00	388.00	481.38	1.90	5.33	0.13	489.40	0.15	6.20	7.90	9.60	1.20	0.60	OME48138 0533 T571
	467.00	481.46	2.00	7.00	0.15	492.20	0.15	8.20	10.70	13.20	1.50	0.60	OME48146 0700 T571
490.00	388.00	481.38	1.90	5.33	0.13	499.40	0.15	6.20	7.90	9.60	1.20	0.60	OME48138 0533 T571
	468.00	494.16	2.00	7.00	0.15	502.20	0.15	8.20	10.70	13.20	1.50	0.60	OME49416 0700 T571
500.00	389.00	506.78	1.90	5.33	0.13	509.40	0.15	6.20	7.90	9.60	1.20	0.60	OME50678 0533 T571
	469.00	506.86	2.00	7.00	0.15	512.20	0.15	8.20	10.70	13.20	1.50	0.60	OME50686 0700 T571
530.00	390.00	532.18	1.90	5.33	0.13	539.40	0.15	6.20	7.90	9.60	1.20	0.60	OME53218 0533 T571
	470.00	532.26	2.00	7.00	0.15	542.20	0.15	8.20	10.70	13.20	1.50	0.60	OME53226 0700 T571
550.00	391.00	557.58	1.90	5.33	0.13	559.40	0.15	6.20	7.90	9.60	1.20	0.60	OME55758 0533 T571
	471.00	557.66	2.00	7.00	0.15	562.20	0.15	8.20	10.70	13.20	1.50	0.60	OME55766 0700 T571
580.00	392.00	582.68	2.40	5.33	0.13	589.40	0.15	6.20	7.90	9.60	1.20	0.60	OME58268 0533 T571
	472.00	582.68	2.40	7.00	0.15	592.20	0.15	8.20	10.70	13.20	1.50	0.60	OME58268 0700 T571
600.00	393.00	608.08	2.40	5.33	0.13	609.40	0.15	6.20	7.90	9.60	1.20	0.60	OME60808 0533 T571
	473.00	608.08	2.40	7.00	0.15	612.20	0.15	8.20	10.70	13.20	1.50	0.60	OME60808 0700 T571
630.00	394.00	633.48	2.40	5.33	0.13	639.40	0.15	6.20	7.90	9.60	1.20	0.60	OME63348 0533 T571
	474.00	633.48	2.40	7.00	0.15	642.20	0.15	8.20	10.70	13.20	1.50	0.60	OME63348 0700 T571
650.00	395.00	658.88	2.40	5.33	0.13	659.40	0.15	6.20	7.90	9.60	1.20	0.60	OME65888 0533 T571
	475.00	658.88	2.40	7.00	0.15	662.20	0.15	8.20	10.70	13.20	1.50	0.60	OME65888 0700 T571

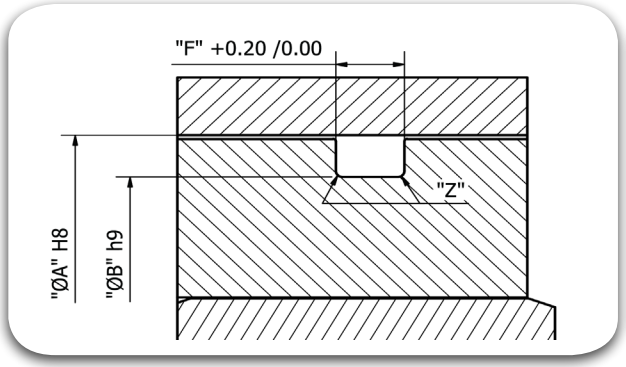

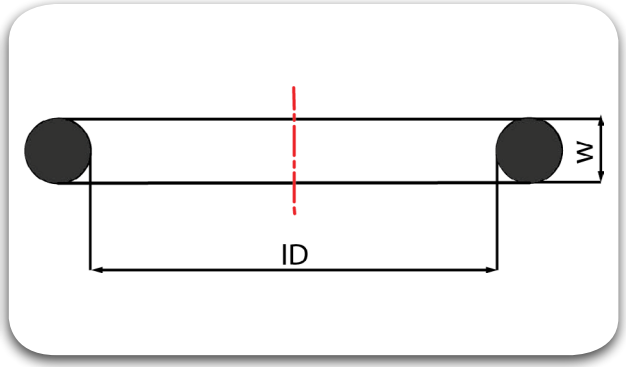

Bore Ø "A" mm	O-Ring Dimensions					Groove Dimensions					Radius		TRIADA® Part Number
	Part No.	Inner Dia. I.D		Width "W"		Groove Dia. ØB		Groove Width without back-up ring	Groove Width with 1 back-up ring	Groove Width with 2 back-up ring	Without back-up ring	With back-up ring	
		I.D mm	Tol ±mm	W mm	Tol ±mm	B mm	Tol ±mm	"F" mm	"F" mm	"F" mm	"Z" mm	"Z" mm	
2.40	1.00	0.74	0.10	1.02	0.08	0.80	0.05	1.40	NA	NA	0.20	0.20	OME00074 0102 T571
3.00	2.00	1.07	0.10	1.27	0.08	1.00	0.05	1.80	NA	NA	0.20	0.20	OME00107 0127 T571
3.50	9021/2	1.78	0.10	1.02	0.08	1.90	0.05	1.40	NA	NA	0.20	0.20	OME00178 0102 T571
4.00	3.00	1.42	0.10	1.52	0.08	1.60	0.05	2.10	NA	NA	0.20	0.20	OME00142 0152 T571
4.80	4.00	1.78	0.13	1.78	0.08	1.90	0.05	2.20	3.60	5.00	0.40	0.20	OME00178 0178 T571
5.50	5.00	2.57	0.13	1.78	0.08	2.60	0.05	2.20	3.60	5.00	0.40	0.20	OME00257 0178 T571
6.00	6.00	2.90	0.13	1.78	0.08	3.10	0.05	2.20	3.60	5.00	0.40	0.20	OME00290 0178 T571
	102.00	1.24	0.10	2.62	0.08	1.50	0.10	3.10	4.50	5.90	0.60	0.30	OME00124 0262 T571
7.00	7.00	3.68	0.13	1.78	0.08	4.10	0.05	2.20	3.60	5.00	0.40	0.20	OME00368 0178 T571
	103.00	2.06	0.13	2.62	0.08	2.50	0.10	3.10	4.50	5.90	0.60	0.30	OME00206 0262 T571
8.00	8.00	4.47	0.13	1.78	0.08	5.10	0.05	2.20	3.60	5.00	0.40	0.20	OME00447 0178 T571
	104.00	2.84	0.13	2.62	0.08	3.50	0.10	3.10	4.50	5.90	0.60	0.30	OME00284 0262 T571
9.00	9.00	5.28	0.13	1.78	0.08	6.10	0.05	2.20	3.60	5.00	0.40	0.20	OME00528 0178 T571
	105.00	3.63	0.13	2.62	0.08	4.50	0.10	3.10	4.50	5.90	0.60	0.30	OME00363 0262 T571
9.50	10.00	6.07	0.13	1.78	0.08	6.60	0.05	2.20	3.60	5.00	0.40	0.20	OME00607 0178 T571
	106.00	4.42	0.13	2.62	0.08	5.00	0.10	3.10	4.50	5.90	0.60	0.30	OME00442 0262 T571
10.00	107.00	5.23	0.13	2.62	0.08	5.50	0.10	3.10	4.50	5.90	0.60	0.30	OME00523 0262 T571

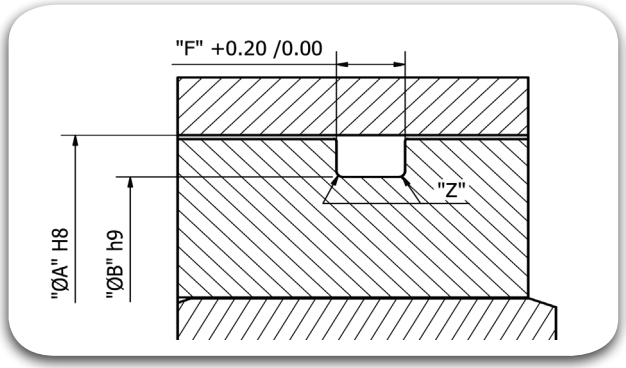

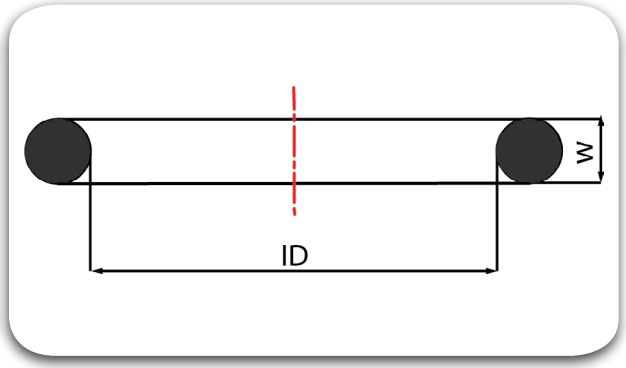

Bore Ø "A" mm	O-Ring Dimensions					Groove Dimensions					Radius		TRIADA® Part Number
	Part No.	Inner Dia. I.D		Width "W"		Groove Dia. ØB		Groove Width without back-up ring	Groove Width with 1 back-up ring	Groove Width with 2 back-up ring	Without back-up ring	With back-up ring	
		I.D mm	Tol ±mm	W mm	Tol ±mm	B mm	Tol ±mm	"F" mm	"F" mm	"F" mm	"Z" mm	"Z" mm	
11.00	11.00	7.65	0.13	1.78	0.08	8.10	0.05	2.20	3.60	5.00	0.40	0.20	OME00765 0178 T571
	108.00	6.02	0.13	2.62	0.08	6.50	0.10	3.10	4.50	5.90	0.60	0.30	OME00602 0262 T571
	201.00	4.34	0.18	3.53	0.10	4.80	0.10	4.20	5.60	7.00	1.00	0.40	OME00434 0353 T571
12.00	12.00	9.25	0.13	1.78	0.08	9.10	0.05	2.20	3.60	5.00	0.40	0.20	OME00925 0178 T571
	109.00	7.59	0.13	2.62	0.08	7.50	0.10	3.10	4.50	5.90	0.60	0.30	OME00759 0262 T571
	202.00	5.94	0.18	3.53	0.10	5.80	0.10	4.20	5.60	7.00	1.00	0.40	OME00594 0353 T571
14.00	13.00	10.82	0.13	1.78	0.08	11.10	0.05	2.20	3.60	5.00	0.40	0.20	OME01082 0178 T571
	110.00	9.19	0.13	2.62	0.08	9.50	0.10	3.10	4.50	5.90	0.60	0.30	OME00919 0262 T571
	203.00	7.52	0.18	3.53	0.10	7.80	0.10	4.20	5.60	7.00	1.00	0.40	OME00752 0353 T571
15.00	906.00	11.89	0.13	1.98	0.08	11.70	0.05	2.50	3.90	5.30	0.40	0.20	OME01189 0198 T571
16.00	14.00	12.42	0.13	1.78	0.08	13.10	0.05	2.20	3.60	5.00	0.40	0.20	OME01242 0178 T571
	111.00	10.77	0.13	2.62	0.08	11.50	0.10	3.10	4.50	5.90	0.60	0.30	OME01077 0262 T571
	204.00	9.12	0.18	3.53	0.10	9.80	0.10	4.20	5.60	7.00	1.00	0.40	OME00912 0353 T571
18.00	15.00	14.00	0.18	1.78	0.08	15.10	0.05	2.20	3.60	5.00	0.40	0.20	OME01400 0178 T571
	112.00	12.37	0.13	2.62	0.08	13.50	0.10	3.10	4.50	5.90	0.60	0.30	OME01237 0262 T571
	205.00	10.69	0.18	3.53	0.10	11.80	0.10	4.20	5.60	7.00	1.00	0.40	OME01069 0353 T571
19.00	16.00	15.60	0.23	1.78	0.08	16.10	0.05	2.20	3.60	5.00	0.40	0.20	OME01560 0178 T571
	113.00	13.94	0.13	2.62	0.08	14.50	0.10	3.10	4.50	5.90	0.60	0.30	OME01394 0262 T571
	206.00	12.29	0.18	3.53	0.10	12.80	0.10	4.20	5.60	7.00	1.00	0.40	OME01229 0353 T571

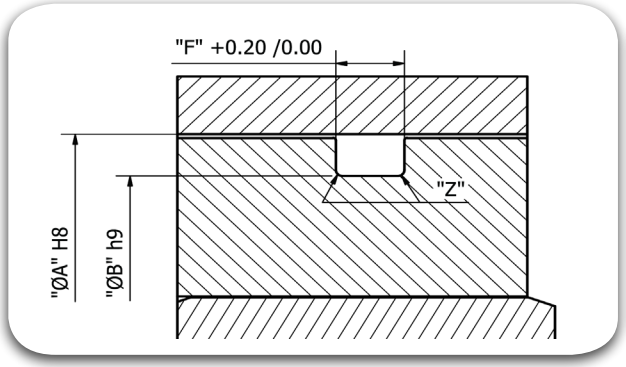

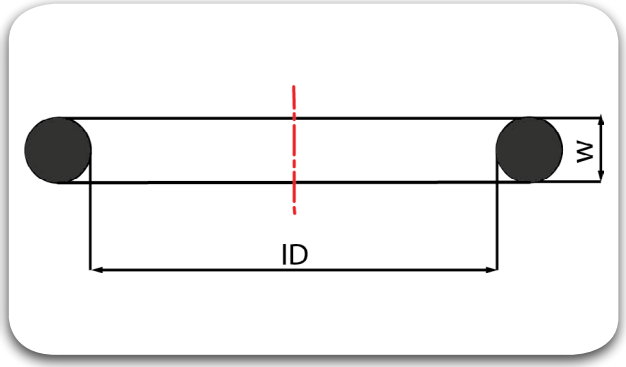

Bore Ø "A" mm	O-Ring Dimensions					Groove Dimensions					Radius		TRIADA® Part Number
	Part No.	Inner Dia. I.D		Width "W"		Groove Dia. ØB		Groove Width without back-up ring	Groove Width with 1 back-up ring	Groove Width with 2 back-up ring	Without back-up ring	With back-up ring	
		I.D mm	Tol ±mm	W mm	Tol ±mm	B mm	Tol ±mm	"F" mm	"F" mm	"F" mm	"Z" mm	"Z" mm	
20.00	17.00	17.17	0.23	1.78	0.08	17.10	0.05	2.20	3.60	5.00	0.40	0.20	OME01717 0178 T571
	114.00	15.54	0.13	2.62	0.08	15.50	0.10	3.10	4.50	5.90	0.60	0.30	OME01554 0262 T571
	207.00	13.87	0.18	3.53	0.10	13.80	0.10	4.20	5.60	7.00	1.00	0.40	OME01387 0353 T571
	309.00	10.46	0.18	5.33	0.13	10.60	0.15	6.20	7.90	9.60	1.20	0.60	OME01045 0533 T571
22.00	18.00	18.77	0.23	1.78	0.08	19.10	0.05	2.20	3.60	5.00	0.40	0.20	OME01877 0178 T571
	115.00	17.12	0.13	2.62	0.08	17.50	0.10	3.10	4.50	5.90	0.60	0.30	OME01712 0262 T571
	208.00	15.47	0.18	3.53	0.10	15.80	0.10	4.20	5.60	7.00	1.00	0.40	OME01547 0353 T571
	310.00	12.07	0.18	5.33	0.13	12.60	0.15	6.20	7.90	9.60	1.20	0.60	OME01207 0533 T571
24.00	19.00	20.35	0.23	1.78	0.08	21.10	0.05	2.20	3.60	5.00	0.40	0.20	OME02035 0178 T571
	116.00	18.72	0.13	2.62	0.08	19.50	0.10	3.10	4.50	5.90	0.60	0.30	OME01872 0262 T571
	209.00	17.04	0.18	3.53	0.10	17.80	0.10	4.20	5.60	7.00	1.00	0.40	OME01704 0353 T571
	311.00	13.62	0.18	5.33	0.13	14.60	0.15	6.20	7.90	9.60	1.20	0.60	OME01362 0533 T571
25.00	20.00	21.95	0.23	1.78	0.08	22.10	0.05	2.20	3.60	5.00	0.40	0.20	OME02195 0178 T571
	117.00	20.29	0.25	2.62	0.08	20.50	0.10	3.10	4.50	5.90	0.60	0.30	OME02029 0262 T571
	210.00	18.64	0.25	3.53	0.10	18.80	0.10	4.20	5.60	7.00	1.00	0.40	OME01864 0353 T571
	312.00	15.24	0.18	5.33	0.13	15.60	0.15	6.20	7.90	9.60	1.20	0.60	OME01524 0533 T571

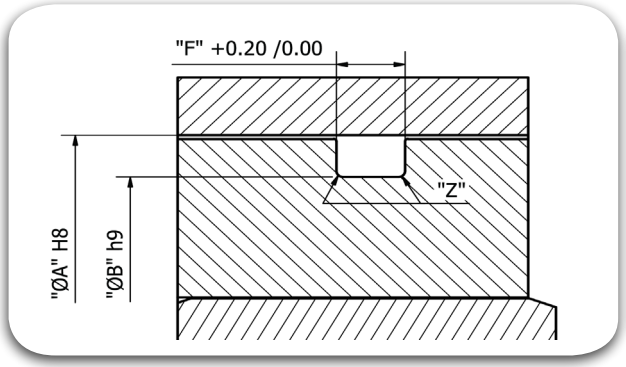

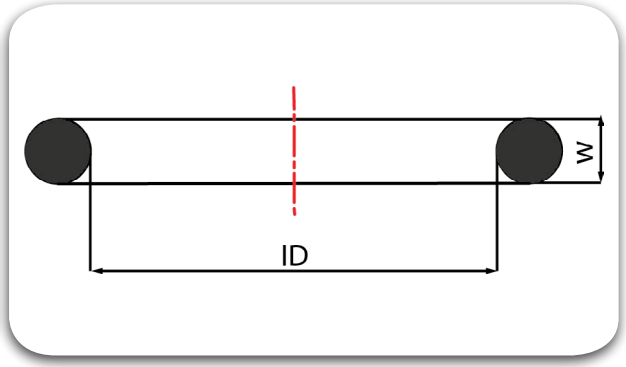

Bore Ø "A" mm	O-Ring Dimensions					Groove Dimensions					Radius		TRIADA® Part Number
	Part No.	Inner Dia. I.D		Width "W"		Groove Dia. ØB		Groove Width without back-up ring	Groove Width with 1 back-up ring	Groove Width with 2 back-up ring	Without back-up ring	With back-up ring	
		I.D mm	Tol ±mm	W mm	Tol ±mm	B mm	Tol ±mm	"F" mm	"F" mm	"F" mm	"Z" mm	"Z" mm	
27.00	21.00	23.52	0.23	1.78	0.08	24.10	0.05	2.20	3.60	5.00	0.40	0.20	OME02352 0178 T571
	118.00	21.89	0.25	2.62	0.08	22.50	0.10	3.10	4.50	5.90	0.60	0.30	OME02189 0262 T571
	211.00	20.22	0.25	3.53	0.10	20.80	0.10	4.20	5.60	7.00	1.00	0.40	OME02022 0353 T571
	313.00	16.81	0.18	5.33	0.13	17.60	0.15	6.20	7.90	9.60	1.20	0.60	OME01681 0533 T571
28.00	22.00	25.12	0.25	1.78	0.08	25.10	0.05	2.20	3.60	5.00	0.40	0.20	OME02512 0178 T571
	119.00	23.47	0.25	2.62	0.08	23.50	0.10	3.10	4.50	5.90	0.60	0.30	OME02347 0262 T571
	212.00	21.82	0.25	3.53	0.10	21.80	0.10	4.20	5.60	7.00	1.00	0.40	OME02182 0353 T571
	314.00	18.42	0.18	5.33	0.13	18.60	0.15	6.20	7.90	9.60	1.20	0.60	OME01842 0533 T571
30.00	23.00	26.70	0.25	1.78	0.08	27.10	0.05	2.20	3.60	5.00	0.40	0.20	OME02670 0178 T571
	120.00	25.07	0.25	2.62	0.08	25.50	0.10	3.10	4.50	5.90	0.60	0.30	OME02507 0262 T571
	213.00	23.39	0.25	3.53	0.10	23.80	0.10	4.20	5.60	7.00	1.00	0.40	OME02339 0353 T571
	315.00	19.99	0.25	5.33	0.13	20.60	0.15	6.20	7.90	9.60	1.20	0.60	OME01999 0533 T571
32.00	24.00	28.30	0.25	1.78	0.08	29.10	0.05	2.20	3.60	5.00	0.40	0.20	OME02830 0178 T571
	121.00	26.64	0.25	2.62	0.08	27.50	0.10	3.10	4.50	5.90	0.60	0.30	OME02664 0262 T571
	214.00	24.99	0.25	3.53	0.10	25.80	0.10	4.20	5.60	7.00	1.00	0.40	OME02499 0353 T571
	316.00	21.59	0.25	5.33	0.13	22.60	0.15	6.20	7.90	9.60	1.20	0.60	OME02159 0533 T571

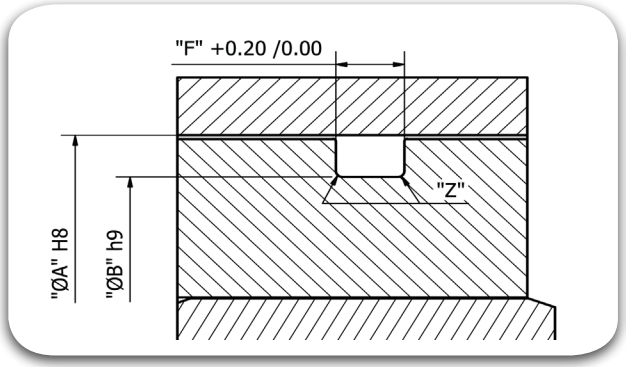

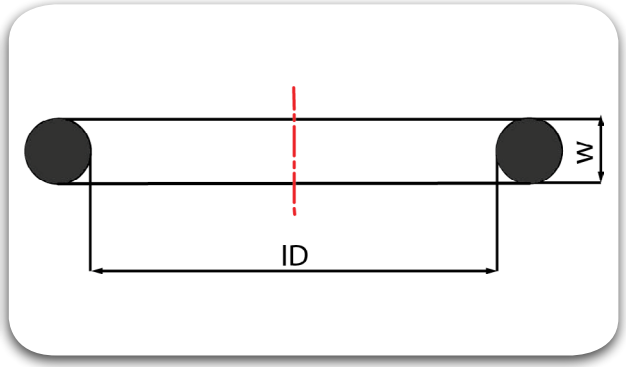

Bore Ø "A" mm	O-Ring Dimensions					Groove Dimensions					Radius		TRIADA® Part Number
	Part No.	Inner Dia. I.D		Width "W"		Groove Dia. ØB		Groove Width without back-up ring	Groove Width with 1 back-up ring	Groove Width with 2 back-up ring	Without back-up ring	With back-up ring	
		I.D mm	Tol ±mm	W mm	Tol ±mm	B mm	Tol ±mm	"F" mm	"F" mm	"F" mm	"Z" mm	"Z" mm	
33.00	25.00	29.87	0.28	1.78	0.08	30.10	0.05	2.20	3.60	5.00	0.40	0.20	OME02987 0178 T571
	122.00	28.24	0.25	2.62	0.08	28.50	0.10	3.10	4.50	5.90	0.60	0.30	OME02824 0262 T571
	215.00	26.57	0.25	3.53	0.10	26.80	0.10	4.20	5.60	7.00	1.00	0.40	OME02657 0353 T571
	316.00	23.16	0.25	5.33	0.13	23.60	0.15	6.20	7.90	9.60	1.20	0.60	OME02316 0533 T571
35.00	26.00	31.47	0.28	1.78	0.08	32.10	0.05	2.20	3.60	5.00	0.40	0.20	OME03147 0178 T571
	123.00	29.82	0.25	2.62	0.08	30.50	0.10	3.10	4.50	5.90	0.60	0.30	OME02982 0262 T571
	216.00	28.17	0.30	3.53	0.10	28.80	0.10	4.20	5.60	7.00	1.00	0.40	OME02817 0353 T571
	318.00	24.77	0.25	5.33	0.13	25.60	0.15	6.20	7.90	9.60	1.20	0.60	OME02477 0533 T571
37.00	27.00	33.05	0.28	1.78	0.08	34.10	0.05	2.20	3.60	5.00	0.40	0.20	OME03305 0178 T571
	124.00	31.42	0.30	2.62	0.08	32.50	0.10	3.10	4.50	5.90	0.60	0.30	OME03142 0262 T571
	217.00	29.74	0.30	3.53	0.10	30.80	0.10	4.20	5.60	7.00	1.00	0.40	OME02974 0353 T571
	319.00	26.34	0.25	5.33	0.13	27.60	0.15	6.20	7.90	9.60	1.20	0.60	OME02634 0533 T571
38.00	28.00	34.65	0.33	1.78	0.08	35.10	0.05	2.20	3.60	5.00	0.40	0.20	OME03465 0178 T571
	125.00	32.99	0.30	2.62	0.08	33.50	0.10	3.10	4.50	5.90	0.60	0.30	OME03299 0262 T571
	218.00	31.44	0.30	3.53	0.10	31.80	0.10	4.20	5.60	7.00	1.00	0.40	OME03144 0353 T571
	320.00	27.94	0.25	5.33	0.13	28.60	0.15	6.20	7.90	9.60	1.20	0.60	OME02794 0533 T571
40.00	126.00	34.59	0.30	2.62	0.08	35.50	0.10	3.10	4.50	5.90	0.60	0.30	OME03459 0262 T571
	219.00	32.92	0.30	3.53	0.10	33.80	0.10	4.20	5.60	7.00	1.00	0.40	OME03292 0353 T571
	321.00	29.51	0.25	5.33	0.13	30.60	0.15	6.20	7.90	9.60	1.20	0.60	OME02951 0533 T571

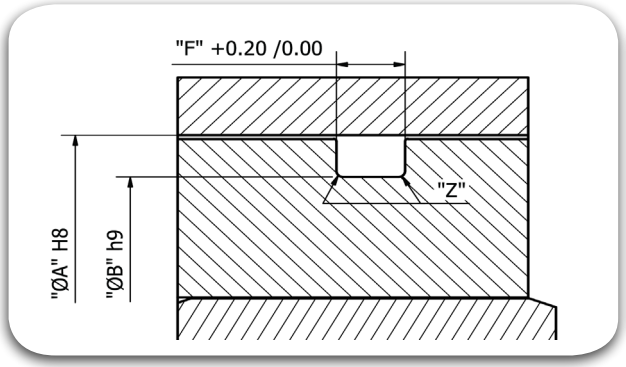

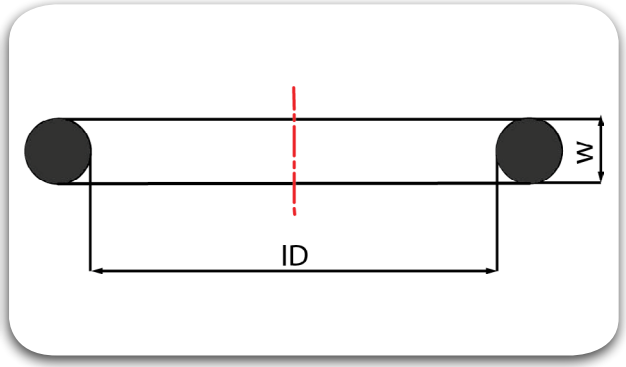

Bore Ø "A" mm	O-Ring Dimensions					Groove Dimensions					Radius		TRIADA® Part Number
	Part No.	Inner Dia. I.D		Width "W"		Groove Dia. ØB		Groove Width without back-up ring	Groove Width with 1 back-up ring	Groove Width with 2 back-up ring	Without back-up ring	With back-up ring	
		I.D mm	Tol ±mm	W mm	Tol ±mm	B mm	Tol ±mm	"F" mm	"F" mm	"F" mm	"Z" mm	"Z" mm	
42.00	29.00	37.82	0.33	1.78	0.08	39.10	0.05	2.20	3.60	5.00	0.40	0.20	OME03782 0178 T571
	127.00	36.17	0.30	2.62	0.08	37.50	0.10	3.10	4.50	5.90	0.60	0.30	OME03617 0262 T571
	220.00	34.52	0.30	3.53	0.10	35.80	0.10	4.20	5.60	7.00	1.00	0.40	OME03452 0353 T571
	322.00	31.12	0.25	5.33	0.13	32.60	0.15	6.20	7.90	9.60	1.20	0.60	OME03112 0533 T571
43.00	128.00	37.77	0.30	2.62	0.08	38.50	0.10	3.10	4.50	5.90	0.60	0.30	OME03777 0262 T571
	221.00	36.09	0.30	3.53	0.10	36.80	0.10	4.20	5.60	7.00	1.00	0.40	OME03609 0353 T571
	323.00	32.69	0.25	5.33	0.13	33.60	0.15	6.20	7.90	9.60	1.20	0.60	OME03269 0533 T571
45.00	30.00	41.00	0.33	1.78	0.08	42.10	0.05	2.20	3.60	5.00	0.40	0.20	OME04100 0178 T571
	129.00	39.34	0.38	2.62	0.08	40.50	0.10	3.10	4.50	5.90	0.60	0.30	OME03934 0262 T571
	222.00	37.69	0.38	3.53	0.10	38.80	0.10	4.20	5.60	7.00	1.00	0.40	OME03769 0353 T571
	324.00	34.29	0.25	5.33	0.13	35.60	0.15	6.20	7.90	9.60	1.20	0.60	OME03429 0533 T571
48.00	31.00	44.17	0.38	1.78	0.08	45.10	0.05	2.20	3.60	5.00	0.40	0.20	OME04417 0178 T571
	131.00	42.52	0.38	2.62	0.08	43.50	0.10	3.10	4.50	5.90	0.60	0.30	OME04252 0262 T571
	223.00	40.87	0.38	3.53	0.10	41.80	0.10	4.20	5.60	7.00	1.00	0.40	OME04087 0353 T571
	325.00	37.47	0.38	5.33	0.13	38.60	0.15	6.20	7.90	9.60	1.20	0.60	OME03747 0178 T571
50.00	32.00	47.35	0.38	1.78	0.08	47.10	0.05	2.20	3.60	5.00	0.40	0.20	OME04735 0178 T571
	132.00	44.12	0.38	2.62	0.08	45.50	0.10	3.10	4.50	5.90	0.60	0.30	OME04412 0262 T571
	224.00	44.04	0.38	3.53	0.10	43.80	0.10	4.20	5.60	7.00	1.00	0.40	OME04404 0353 T571
	326.00	40.64	0.38	5.33	0.13	40.60	0.15	6.20	7.90	9.60	1.20	0.60	OME04064 0533 T571

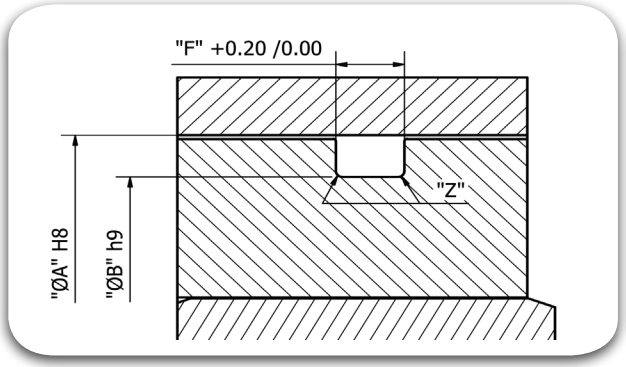

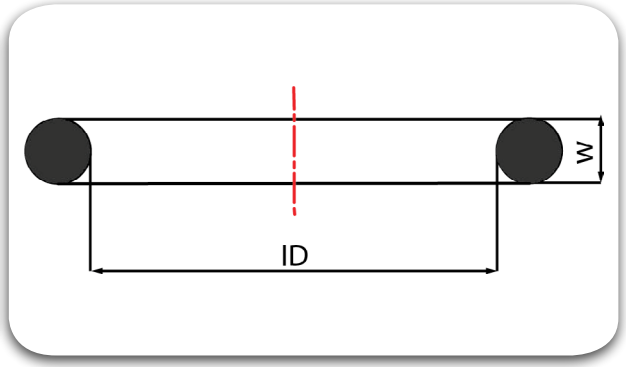

Bore Ø "A" mm	O-Ring Dimensions					Groove Dimensions					Radius		TRIADA® Part Number
	Part No.	Inner Dia. I.D		Width "W"		Groove Dia. ØB		Groove Width without back-up ring	Groove Width with 1 back-up ring	Groove Width with 2 back-up ring	Without back-up ring	With back-up ring	
		I.D mm	Tol ±mm	W mm	Tol ±mm	B mm	Tol ±mm	"F" mm	"F" mm	"F" mm	"Z" mm	"Z" mm	
52.00	32.00	47.35	0.38	1.78	0.08	49.10	0.05	2.20	3.60	5.00	0.40	0.20	OME04735 0178 T571
	133.00	45.69	0.38	2.62	0.08	47.50	0.10	3.10	4.50	5.90	0.60	0.30	OME04569 0262 T571
	224.00	44.04	0.38	3.53	0.10	45.80	0.10	4.20	5.60	7.00	1.00	0.40	OME04404 0353 T571
	326.00	40.64	0.38	5.33	0.13	42.60	0.15	6.20	7.90	9.60	1.20	0.60	OME04064 0533 T571
55.00	33.00	50.52	0.46	1.78	0.08	52.10	0.05	2.20	3.60	5.00	0.40	0.20	OME05052 0178 T571
	135.00	48.90	0.43	2.62	0.08	50.50	0.10	3.10	4.50	5.90	0.60	0.30	OME04890 0262 T571
	225.00	47.22	0.46	3.53	0.10	48.80	0.10	4.20	5.60	7.00	1.00	0.40	OME04722 0353 T571
	327.00	43.82	0.38	5.33	0.13	45.60	0.15	6.20	7.90	9.60	1.20	0.60	OME04382 0533 T571
58.00	34.00	53.70	0.46	1.78	0.08	55.10	0.05	2.20	3.60	5.00	0.40	0.20	OME05370 0178 T571
	137.00	52.07	0.43	2.62	0.08	53.50	0.10	3.10	4.50	5.90	0.60	0.30	OME05207 0262 T571
	226.00	50.39	0.46	3.53	0.10	51.80	0.10	4.20	5.60	7.00	1.00	0.40	OME05039 0353 T571
	328.00	49.99	0.38	5.33	0.13	48.60	0.15	6.20	7.90	9.60	1.20	0.60	OME04999 0533 T571
60.00	35.00	56.87	0.46	1.78	0.08	57.10	0.05	2.20	3.60	5.00	0.40	0.20	OME05687 0178 T571
	139.00	55.25	0.43	2.62	0.08	55.50	0.10	3.10	4.50	5.90	0.60	0.30	OME05525 0262 T571
	227.00	53.57	0.46	3.53	0.10	53.80	0.10	4.20	5.60	7.00	1.00	0.40	OME05357 0353 T571
	329.00	50.17	0.46	5.33	0.13	50.60	0.15	6.20	7.90	9.60	1.20	0.60	OME05017 0533 T571

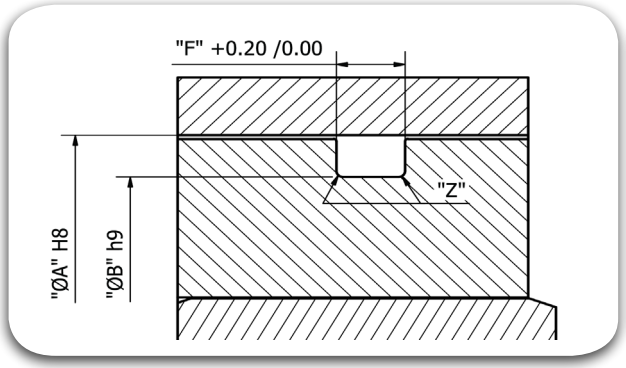

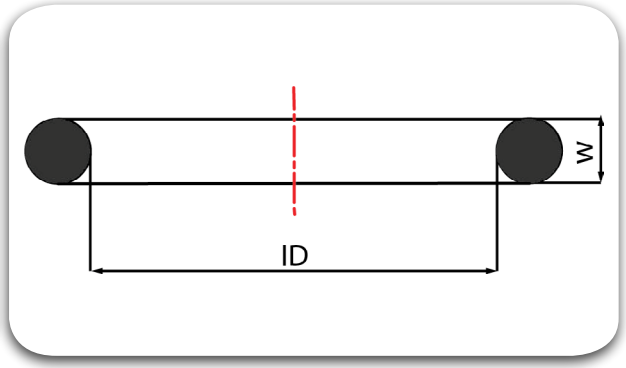

Bore Ø "A" mm	O-Ring Dimensions					Groove Dimensions					Radius		TRIADA® Part Number
	Part No.	Inner Dia. I.D		Width "W"		Groove Dia. ØB		Groove Width without back-up ring	Groove Width with 1 back-up ring	Groove Width with 2 back-up ring	Without back-up ring	With back-up ring	
		I.D mm	Tol ±mm	W mm	Tol ±mm	B mm	Tol ±mm	"F" mm	"F" mm	"F" mm	"Z" mm	"Z" mm	
63.00	36.00	60.05	0.46	1.78	0.08	60.10	0.05	2.20	3.60	5.00	0.40	0.20	OME06005 0178 T571
	141.00	58.42	0.51	2.62	0.08	58.50	0.10	3.10	4.50	5.90	0.60	0.30	OME05842 0262 T571
	228.00	56.74	0.51	3.53	0.10	56.80	0.10	4.20	5.60	7.00	1.00	0.40	OME05674 0353 T571
	330.00	53.34	0.46	5.33	0.13	53.60	0.15	6.20	7.90	9.60	1.20	0.60	OME05334 0533 T571
65.00	36.00	60.05	0.46	1.78	0.08	62.10	0.05	2.20	3.60	5.00	0.40	0.20	OME06005 0178 T571
	141.00	58.42	0.51	2.62	0.08	60.50	0.10	3.10	4.50	5.90	0.60	0.30	OME05842 0262 T571
	228.00	56.74	0.51	3.53	0.10	58.80	0.10	4.20	5.60	7.00	1.00	0.40	OME05674 0353 T571
	330.00	53.34	0.46	5.33	0.13	55.60	0.15	6.20	7.90	9.60	1.20	0.60	OME05334 0533 T571
68.00	37.00	63.22	0.46	1.78	0.08	65.10	0.05	2.20	3.60	5.00	0.40	0.20	OME06322 0178 T571
	144.00	63.17	0.51	2.62	0.08	63.50	0.10	3.10	4.50	5.90	0.60	0.30	OME06317 0262 T571
	229.00	59.92	0.51	3.53	0.10	61.80	0.10	4.20	5.60	7.00	1.00	0.40	OME05992 0353 T571
	331.00	56.52	0.46	5.33	0.13	58.60	0.15	6.20	7.90	9.60	1.20	0.60	OME05652 0533 T571
70.00	38.00	66.40	0.51	1.78	0.08	67.10	0.05	2.20	3.60	5.00	0.40	0.20	OME06640 0178 T571
	145.00	64.77	0.51	2.62	0.08	65.50	0.10	3.10	4.50	5.90	0.60	0.30	OME06477 0262 T571
	230.00	63.09	0.51	3.53	0.10	63.80	0.10	4.20	5.60	7.00	1.00	0.40	OME06309 0353 T571
	332.00	59.69	0.46	5.33	0.13	60.60	0.15	6.20	7.90	9.60	1.20	0.60	OME05969 0533 T571

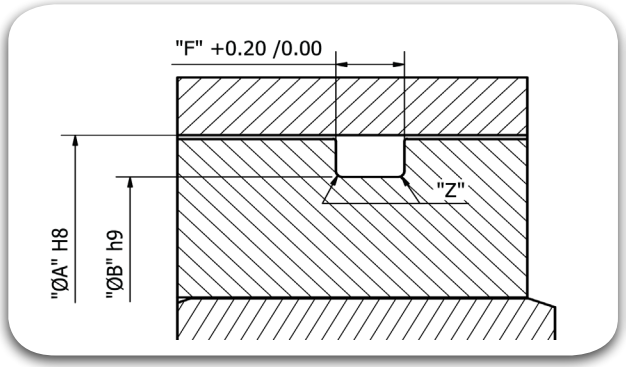

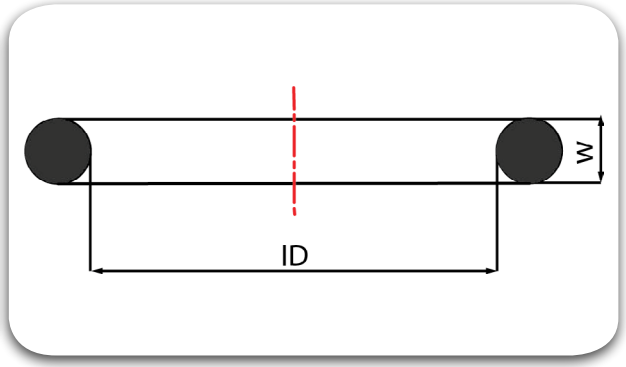

Bore Ø "A" mm	O-Ring Dimensions					Groove Dimensions					Radius		TRIADA® Part Number
	Part No.	Inner Dia. I.D		Width "W"		Groove Dia. ØB		Groove Width without back-up ring	Groove Width with 1 back-up ring	Groove Width with 2 back-up ring	Without back-up ring	With back-up ring	
		I.D mm	Tol ±mm	W mm	Tol ±mm	B mm	Tol ±mm	"F" mm	"F" mm	"F" mm	"Z" mm	"Z" mm	
75.00	39.00	69.57	0.51	1.78	0.08	72.10	0.05	2.20	3.60	5.00	0.40	0.20	OME06957 0178 T571
	148.00	69.52	0.56	2.62	0.08	70.50	0.10	3.10	4.50	5.90	0.60	0.30	OME06952 0262 T571
	231.00	66.27	0.51	3.53	0.10	68.80	0.10	4.20	5.60	7.00	1.00	0.40	OME06627 0353 T571
	333.00	62.87	0.51	5.33	0.13	65.60	0.15	6.20	7.90	9.60	1.20	0.60	OME06287 0533 T571
78.00	40.00	72.75	0.51	1.78	0.08	75.10	0.05	2.20	3.60	5.00	0.40	0.20	OME07275 0178 T571
	150.00	72.69	0.56	2.62	0.08	73.50	0.10	3.10	4.50	5.90	0.60	0.30	OME07269 0262 T571
	232.00	69.44	0.61	3.53	0.10	71.80	0.10	4.20	5.60	7.00	1.00	0.40	OME06944 0353 T571
	334.00	66.04	0.51	5.33	0.13	68.60	0.15	6.20	7.90	9.60	1.20	0.60	OME06604 0533 T571
80.00	41.00	75.92	0.61	1.78	0.08	77.10	0.05	2.20	3.60	5.00	0.40	0.20	OME07592 0178 T571
	151.00	75.87	0.61	2.62	0.08	75.50	0.10	3.10	4.50	5.90	0.60	0.30	OME07587 0262 T571
	233.00	72.66	0.61	3.53	0.10	73.80	0.10	4.20	5.60	7.00	1.00	0.40	OME07266 0353 T571
	335.00	69.22	0.51	5.33	0.13	70.60	0.15	6.20	7.90	9.60	1.20	0.60	OME06922 0533 T571
83.00	234.00	75.79	0.61	3.53	0.10	76.80	0.10	4.20	5.60	7.00	1.00	0.40	OME07579 0353 T571
	336.00	72.39	0.51	5.33	0.13	73.60	0.15	6.20	7.90	9.60	1.20	0.60	OME07239 0533 T571
85.00	42.00	82.27	0.61	1.78	0.08	82.10	0.05	2.20	3.60	5.00	0.40	0.20	OME08227 0178 T571
	235.00	78.97	0.61	3.53	0.10	78.80	0.10	4.20	5.60	7.00	1.00	0.40	OME07897 0353 T571
	337.00	75.57	0.61	5.33	0.13	75.60	0.15	6.20	7.90	9.60	1.20	0.60	OME07557 0533 T571

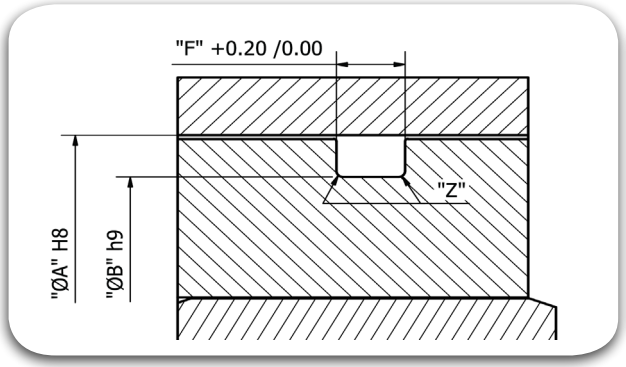

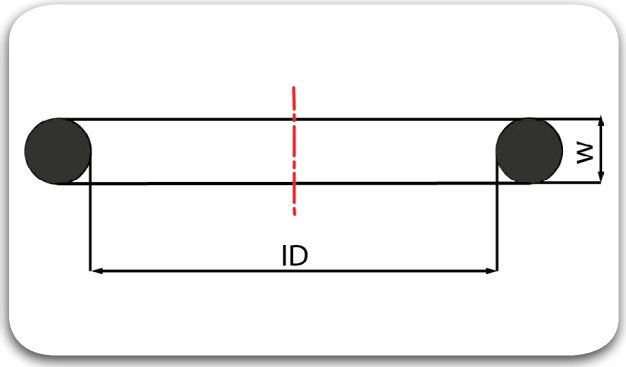

Bore Ø "A" mm	O-Ring Dimensions					Groove Dimensions					Radius		TRIADA® Part Number
	Part No.	Inner Dia. I.D		Width "W"		Groove Dia. ØB		Groove Width without back-up ring	Groove Width with 1 back-up ring	Groove Width with 2 back-up ring	Without back-up ring	With back-up ring	
		I.D mm	Tol ±mm	W mm	Tol ±mm	B mm	Tol ±mm	"F" mm	"F" mm	"F" mm	"Z" mm	"Z" mm	
90.00	152.00	82.22	0.61	2.62	0.08	85.50	0.10	3.10	4.50	5.90	0.60	0.30	OME08222 0262 T571
	236.00	82.15	0.61	3.53	0.10	83.80	0.10	4.20	5.60	7.00	1.00	0.40	OME08215 0353 T571
	338.00	78.44	0.61	5.33	0.13	80.60	0.15	6.20	7.90	9.60	1.20	0.60	OME07844 0533 T571
92.00	43.00	88.62	0.61	1.78	0.08	89.10	0.05	2.20	3.60	5.00	0.40	0.20	OME08862 0178 T571
	237.00	85.32	0.61	3.53	0.10	85.80	0.10	4.20	5.60	7.00	1.00	0.40	OME08532 0353 T571
	339.00	81.92	0.61	5.33	0.13	82.60	0.15	6.20	7.90	9.60	1.20	0.60	OME08192 0533 T571
95.00	153.00	88.57	0.61	2.62	0.08	90.50	0.10	3.10	4.50	5.90	0.60	0.30	OME08857 0262 T571
	238.00	88.49	0.61	3.53	0.10	88.80	0.10	4.20	5.60	7.00	1.00	0.40	OME08849 0353 T571
	340.00	85.09	0.61	5.33	0.13	85.60	0.15	6.20	7.90	9.60	1.20	0.60	OME08509 0533 T571
98.00	44.00	94.97	0.69	2.62	0.08	95.10	0.05	2.20	3.60	5.00	0.40	0.20	OME09497 0262 T571
	239.00	91.67	0.71	3.53	0.10	91.80	0.10	4.20	5.60	7.00	1.00	0.40	OME09167 0353 T571
	341.00	88.27	0.61	5.33	0.13	88.60	0.15	6.20	7.90	9.60	1.20	0.60	OME08827 0533 T571
100.00	154.00	94.92	0.71	2.62	0.08	95.50	0.10	3.10	4.50	5.90	0.60	0.30	OME09492 0262 T571
	240.00	94.84	0.71	3.53	0.10	93.80	0.10	4.20	5.60	7.00	1.00	0.40	OME09484 0353 T571
	342.00	91.44	0.71	5.33	0.13	90.60	0.15	6.20	7.90	9.60	1.20	0.60	OME09144 0533 T571
105.00	45.00	101.32	0.69	1.78	0.08	102.10	0.05	2.20	3.60	5.00	0.40	0.20	OME10132 0178 T571
	155.00	101.27	0.71	2.62	0.08	100.50	0.10	3.10	4.50	5.90	0.60	0.30	OME10127 0262 T571
	241.00	98.02	0.71	3.53	0.10	98.80	0.10	4.20	5.60	7.00	1.00	0.40	OME09802 0353 T571
	343.00	94.62	0.71	5.33	0.13	95.60	0.15	6.20	7.90	9.60	1.20	0.60	OME09462 0533 T571

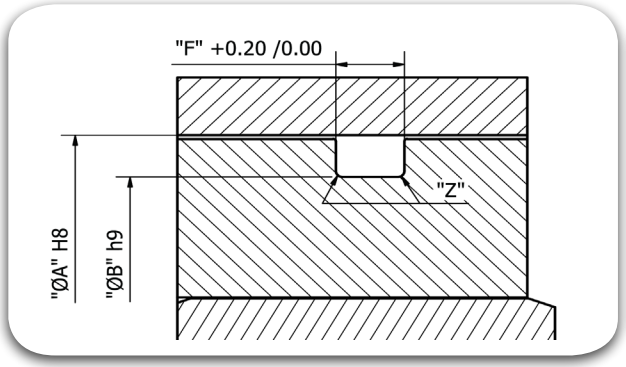

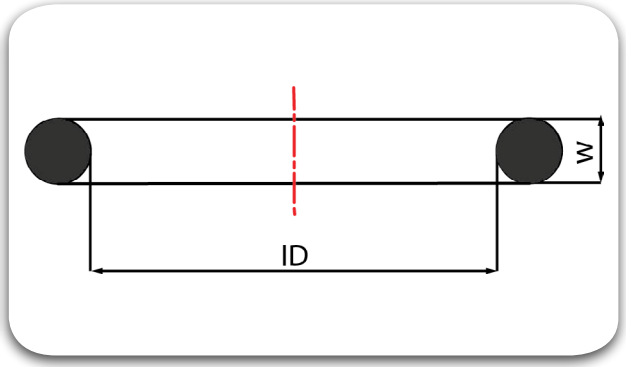

Bore Ø "A" mm	O-Ring Dimensions					Groove Dimensions					Radius		TRIADA® Part Number
	Part No.	Inner Dia. I.D		Width "W"		Groove Dia. ØB		Groove Width without back-up ring	Groove Width with 1 back-up ring	Groove Width with 2 back-up ring	Without back-up ring	With back-up ring	
		I.D mm	Tol ±mm	W mm	Tol ±mm	B mm	Tol ±mm	"F" mm	"F" mm	"F" mm	"Z" mm	"Z" mm	
108.00	242.00	101.19	0.71	3.53	0.10	101.80	0.10	4.20	5.60	7.00	1.00	0.40	OME10119 0353 T571
	344.00	97.79	0.71	5.33	0.13	98.60	0.15	6.20	7.90	9.60	1.20	0.60	OME09779 0533 T571
110.00	46.00	107.67	0.76	1.78	0.08	107.10	0.05	2.20	3.60	5.00	0.40	0.20	OME10167 0178 T571
	243.00	104.37	0.71	3.53	0.10	103.80	0.10	4.20	5.60	7.00	1.00	0.40	OME10437 0353 T571
	345.00	100.97	0.71	5.33	0.13	100.60	0.15	6.20	7.90	9.60	1.20	0.60	OME10097 0533 T571
114.00	156.00	107.62	0.76	2.62	0.08	109.50	0.10	3.10	4.50	5.90	0.60	0.30	OME10762 0262 T571
	244.00	107.54	0.76	3.53	0.10	107.80	0.10	4.20	5.60	7.00	1.00	0.40	OME10754 0353 T571
	346.00	104.14	0.71	5.33	0.13	104.60	0.15	6.20	7.90	9.60	1.20	0.60	OME10414 0533 T571
115.00	156.00	107.62	0.76	2.62	0.08	110.50	0.10	3.10	4.50	5.90	0.60	0.30	OME10762 0262 T571
	244.00	107.54	0.76	3.53	0.10	108.80	0.10	4.20	5.60	7.00	1.00	0.40	OME10754 0353 T571
	346.00	104.14	0.71	5.33	0.13	105.60	0.15	6.20	7.90	9.60	1.20	0.60	OME10414 0533 T571
117.00	47.00	114.02	0.76	1.78	0.08	114.10	0.05	2.20	3.60	5.00	0.40	0.20	OME11402 0178 T571
	245.00	110.72	0.76	3.53	0.10	110.80	0.10	4.20	5.60	7.00	1.00	0.40	OME11072 0353 T571
	347.00	107.32	0.76	5.33	0.13	107.60	0.15	6.20	7.90	9.60	1.20	0.60	OME10732 0533 T571
118.00	47.00	114.02	0.76	1.78	0.08	115.10	0.05	2.20	3.60	5.00	0.40	0.20	OME11402 0178 T571
	245.00	110.72	0.76	3.53	0.10	111.80	0.10	4.20	5.60	7.00	1.00	0.40	OME11072 0353 T571
	347.00	107.32	0.76	5.33	0.13	108.60	0.15	6.20	7.90	9.60	1.20	0.60	OME10732 0533 T571
120.00	157.00	113.97	0.76	2.62	0.08	115.50	0.10	3.10	4.50	5.90	0.60	0.30	OME11397 0262 T571
	246.00	113.89	0.76	3.53	0.10	113.80	0.10	4.20	5.60	7.00	1.00	0.40	OME11389 0353 T571
	348.00	110.49	0.76	5.33	0.13	110.60	0.15	6.2	7.9	9.6	1.2	0.6	OME11049 0533 T571

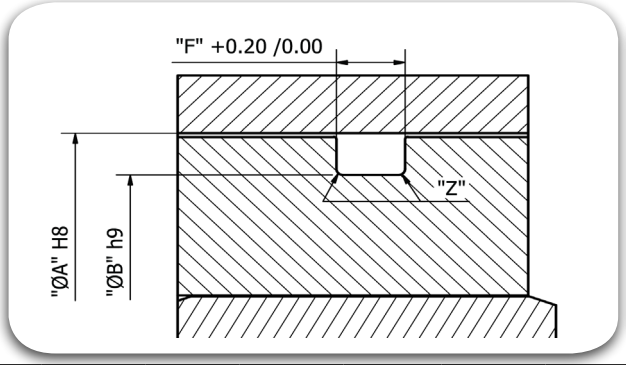

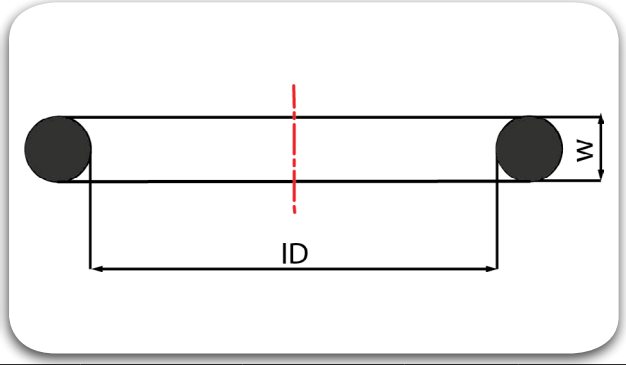

Bore Ø "A" mm	O-Ring Dimensions					Groove Dimensions					Radius		TRIADA® Part Number
	Part No.	Inner Dia. I.D		Width "W"		Groove Dia. ØB		Groove Width without back-up ring	Groove Width with 1 back-up ring	Groove Width with 2 back-up ring	Without back-up ring	With back-up ring	
		I.D mm	Tol ±mm	W mm	Tol ±mm	B mm	Tol ±mm	"F" mm	"F" mm	"F" mm	"Z" mm	"Z" mm	
125.00	48.00	120.37	0.76	1.78	0.08	122.10	0.05	2.20	3.60	5.00	0.40	0.20	OME12037 0178 T571
	158.00	120.32	0.76	2.62	0.08	120.50	0.10	3.10	4.50	5.90	0.60	0.30	OME12032 0262 T571
	247.00	117.07	0.76	3.53	0.10	118.80	0.10	4.20	5.60	7.00	1.00	0.40	OME11707 0353 T571
	349.00	113.67	0.76	5.33	0.13	115.60	0.15	6.20	7.90	9.60	1.20	0.60	OME11367 0533 T571
128.00	248.00	120.24	0.76	3.53	0.10	121.80	0.10	4.20	5.60	7.00	1.00	0.40	OME12024 0353 T571
	350.00	116.84	0.76	5.33	0.13	118.60	0.15	6.20	7.90	9.60	1.20	0.60	OME11684 0533 T571
	425.00	113.67	0.84	7.00	0.15	115.80	0.15	8.20	10.70	13.20	1.50	0.60	OME11367 0700 T571
130.00	49.00	126.72	0.94	1.78	0.08	127.10	0.05	2.20	3.60	5.00	0.40	0.20	OME12672 0178 T571
	249.00	123.42	0.89	3.53	0.10	123.80	0.10	4.20	5.60	7.00	1.00	0.40	OME12342 0353 T571
	351.00	120.02	0.76	5.33	0.13	120.60	0.15	6.20	7.90	9.60	1.20	0.60	OME12002 0533 T571
	426.00	116.84	0.84	7.00	0.15	117.80	0.15	8.20	10.70	13.20	1.50	0.60	OME11684 0700 T571
135.00	159.00	126.67	0.89	2.62	0.08	130.50	0.10	3.10	4.50	5.90	0.60	0.30	OME12667 0262 T571
	250.00	126.59	0.89	3.53	0.10	128.80	0.10	4.20	5.60	7.00	1.00	0.40	OME12659 0353 T571
	352.00	123.19	0.76	5.33	0.13	125.60	0.15	6.20	7.90	9.60	1.20	0.60	OME12319 0533 T571
	427.00	120.02	0.84	7.00	0.15	122.80	0.15	8.20	10.70	13.20	1.50	0.60	OME12002 0700 T571
137.00	50.00	133.07	0.94	1.78	0.08	134.10	0.05	2.20	3.60	5.00	0.40	0.20	OME13307 0178 T571
	251.00	129.77	0.89	3.53	0.10	130.80	0.10	4.20	5.60	7.00	1.00	0.40	OME12977 0353 T571
	353.00	126.37	0.76	5.33	0.13	127.60	0.15	6.20	7.90	9.60	1.20	0.60	OME12637 0533 T571
	428.00	123.19	0.84	7.00	0.15	124.80	0.15	8.20	10.70	13.20	1.50	0.60	OME12319 0700 T571

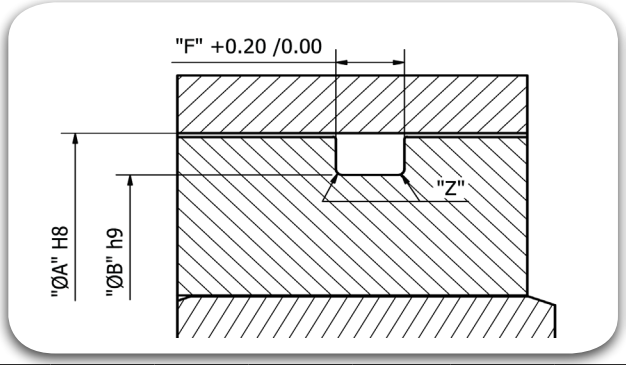

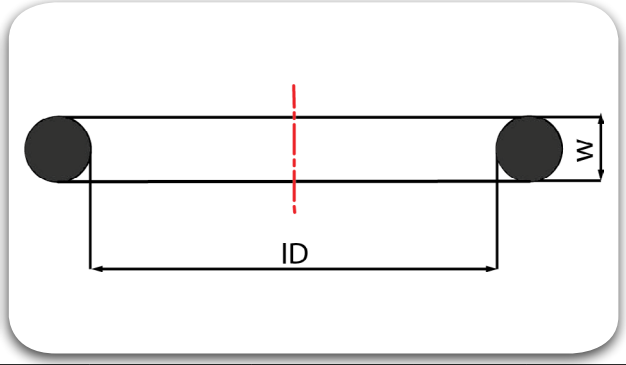

Bore Ø "A" mm	O-Ring Dimensions					Groove Dimensions					Radius		TRIADA® Part Number
	Part No.	Inner Dia. I.D		Width "W"		Groove Dia. ØB		Groove Width without back-up ring	Groove Width with 1 back-up ring	Groove Width with 2 back-up ring	Without back-up ring	With back-up ring	
		I.D mm	Tol ±mm	W mm	Tol ±mm	B mm	Tol ±mm	"F" mm	"F" mm	"F" mm	"Z" mm	"Z" mm	
140.00	160.00	133.02	0.89	2.62	0.08	135.50	0.10	3.10	4.50	5.90	0.60	0.30	OME13302 0262 T571
	252.00	132.94	0.89	3.53	0.10	133.80	0.10	4.20	5.60	7.00	1.00	0.40	OME13294 0353 T571
	354.00	129.54	0.90	5.33	0.13	130.60	0.15	6.20	7.90	9.60	1.20	0.60	OME12954 0533 T571
	429.00	126.37	0.94	7.00	0.15	127.80	0.15	8.20	10.70	13.20	1.50	0.60	OME12637 0700 T571
143.00	253.00	136.12	0.89	3.53	0.10	136.80	0.10	4.20	5.60	7.00	1.00	0.40	OME13612 0353 T571
	355.00	132.72	0.90	5.33	0.13	133.60	0.15	6.20	7.90	9.60	1.20	0.60	OME13272 0533 T571
	430.00	129.54	0.94	7.00	0.15	130.80	0.15	8.20	10.70	13.20	1.50	0.60	OME12954 0700 T571
145.00	161.00	139.37	0.89	2.62	0.08	140.50	0.10	3.10	4.50	5.90	0.60	0.30	OME13937 0262 T571
	254.00	139.29	0.89	3.53	0.10	138.80	0.10	4.20	5.60	7.00	1.00	0.40	OME13929 0353 T571
	356.00	135.89	0.90	5.33	0.13	135.60	0.15	6.20	7.90	9.60	1.20	0.60	OME13589 0533 T571
	431.00	132.72	0.94	7.00	0.15	132.80	0.15	8.20	10.70	13.20	1.50	0.60	OME13272 0700 T571
150.00	162.00	145.72	0.89	2.62	0.08	145.50	0.10	3.10	4.50	5.90	0.60	0.30	OME14572 0262 T571
	255.00	142.47	0.89	3.53	0.10	143.80	0.10	4.20	5.60	7.00	1.00	0.40	OME14247 0353 T571
	357.00	139.07	0.90	5.33	0.13	140.60	0.15	6.20	7.90	9.60	1.20	0.60	OME13907 0533 T571
	432.00	135.89	0.94	7.00	0.15	137.80	0.15	8.20	10.70	13.20	1.50	0.60	OME13589 0700 T571
152.00	256.00	145.64	0.89	3.53	0.10	145.80	0.10	4.20	5.60	7.00	1.00	0.40	OME14564 0353 T571
	358.00	142.24	0.90	5.33	0.13	142.60	0.15	6.20	7.90	9.60	1.20	0.60	OME14224 0533 T571
	433.00	139.07	0.94	7.00	0.15	139.80	0.15	8.20	10.70	13.20	1.50	0.60	OME13907 0700 T571

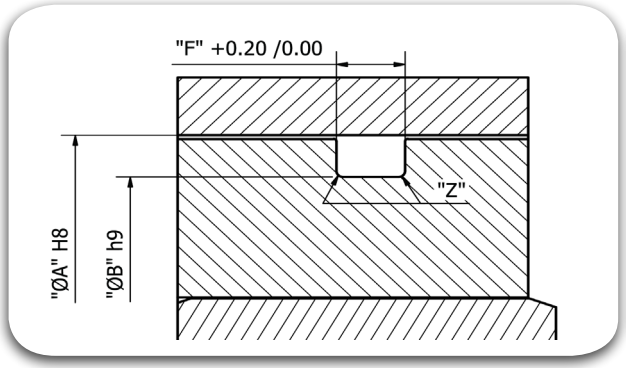

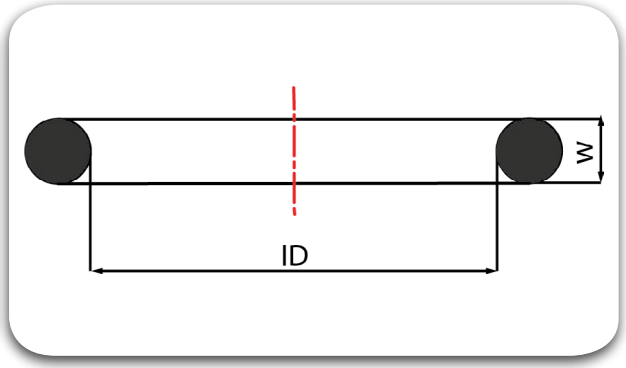

Bore Ø "A" mm	O-Ring Dimensions					Groove Dimensions					Radius		TRIADA® Part Number
	Part No.	Inner Dia. I.D		Width "W"		Groove Dia. ØB		Groove Width without back-up ring	Groove Width with 1 back-up ring	Groove Width with 2 back-up ring	Without back-up ring	With back-up ring	
		I.D mm	Tol ±mm	W mm	Tol ±mm	B mm	Tol ±mm	"F" mm	"F" mm	"F" mm	"Z" mm	"Z" mm	
155.00	257.00	148.82	0.89	3.53	0.10	148.80	0.10	4.20	5.60	7.00	1.00	0.40	OME14882 0353 T571
	359.00	145.42	0.90	5.33	0.13	145.60	0.15	6.20	7.90	9.60	1.20	0.60	OME14542 0533 T571
	434.00	142.24	0.94	7.00	0.15	142.80	0.15	8.20	10.70	13.20	1.50	0.60	OME14224 0700 T571
160.00	163.00	152.07	0.89	2.62	0.08	155.50	0.10	3.10	4.50	5.90	0.60	0.30	OME15207 0262 T571
	258.00	151.99	0.89	3.53	0.10	153.80	0.10	4.20	5.60	7.00	1.00	0.40	OME15199 0353 T571
	360.00	148.49	0.90	5.33	0.13	150.60	0.15	6.20	7.90	9.60	1.20	0.60	OME14849 0533 T571
	435.00	145.42	0.94	7.00	0.15	147.80	0.15	8.20	10.70	13.20	1.50	0.60	OME14542 0700 T571
162.00	361.00	151.77	0.90	5.33	0.13	152.60	0.15	6.20	7.90	9.60	1.20	0.60	OME15177 0533 T571
	436.00	148.59	0.94	7.00	0.15	149.80	0.15	8.20	10.70	13.20	1.50	0.60	OME14859 0700 T571
165.00	164.00	158.42	1.02	2.62	0.08	160.50	0.10	3.10	4.50	5.90	0.60	0.30	OME15842 0262 T571
	259.00	158.34	1.02	3.53	0.10	158.80	0.10	4.20	5.60	7.00	1.00	0.40	OME15834 0353 T571
	437.00	151.77	0.94	7.00	0.15	152.80	0.15	8.20	10.70	13.20	1.50	0.60	OME15177 0700 T571
170.00	165.00	164.77	1.02	2.62	0.08	165.50	0.10	3.10	4.50	5.90	0.60	0.30	OME16477 0262 T571
	259.00	158.34	1.02	3.53	0.10	163.80	0.10	4.20	5.60	7.00	1.00	0.40	OME15834 0353 T571
	362.00	158.12	0.90	5.33	0.13	160.60	0.15	6.20	7.90	9.60	1.20	0.60	OME15812 0533 T571
	438.00	158.12	1.02	7.00	0.15	157.80	0.15	8.20	10.70	13.20	1.50	0.60	OME15812 0700 T571

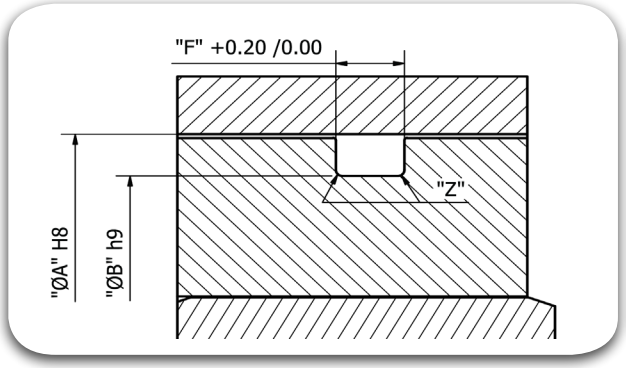

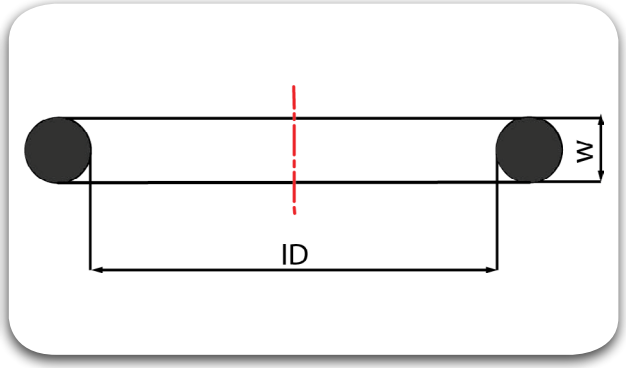

Bore Ø "A" mm	O-Ring Dimensions					Groove Dimensions					Radius		TRIADA® Part Number
	Part No.	Inner Dia. I.D		Width "W"		Groove Dia. ØB		Groove Width without back-up ring	Groove Width with 1 back-up ring	Groove Width with 2 back-up ring	Without back-up ring	With back-up ring	
		I.D mm	Tol ±mm	W mm	Tol ±mm	B mm	Tol ±mm	"F" mm	"F" mm	"F" mm	"Z" mm	"Z" mm	
175.00	166.00	171.11	1.02	2.62	0.08	170.50	0.10	3.10	4.50	5.90	0.60	0.30	OME17111 0262 T571
	260.00	164.70	1.02	3.53	0.10	168.80	0.10	4.20	5.60	7.00	1.00	0.40	OME16470 0353 T571
	363.00	164.47	0.90	5.33	0.13	165.60	0.15	6.20	7.90	9.60	1.20	0.60	OME16447 0533 T571
	438.00	158.10	1.02	7.00	0.15	162.80	0.15	8.20	10.70	13.20	1.50	0.60	OME15810 0700 T571
180.00	166.00	171.12	1.02	2.62	0.08	175.50	0.10	3.10	4.50	5.90	0.60	0.30	OME17112 0262 T571
	261.00	171.05	1.02	3.53	0.10	173.80	0.10	4.20	5.60	7.00	1.00	0.40	OME17105 0353 T571
	364.00	170.81	0.90	5.33	0.13	170.60	0.15	6.20	7.90	9.60	1.20	0.60	OME17081 0533 T571
	439.00	164.46	1.02	7.00	0.15	167.80	0.15	8.20	10.70	13.20	1.50	0.60	OME16446 0700 T571
185.00	167.00	177.47	1.02	2.62	0.08	180.50	0.10	3.10	4.50	5.90	0.60	0.30	OME17747 0262 T571
	262.00	177.39	1.02	3.53	0.10	178.80	0.10	4.20	5.60	7.00	1.00	0.40	OME17739 0353 T571
	364.00	170.82	0.90	5.33	0.13	175.60	0.15	6.20	7.90	9.60	1.20	0.60	OME17082 0533 T571
	440.00	170.82	1.02	7.00	0.15	172.80	0.15	8.20	10.70	13.20	1.50	0.60	OME17082 0700 T571
190.00	168.00	183.82	1.14	2.62	0.08	185.50	0.10	3.10	4.50	5.90	0.60	0.30	OME18382 0262 T571
	263.00	183.74	1.14	3.53	0.10	183.80	0.10	4.20	5.60	7.00	1.00	0.40	OME18374 0353 T571
	365.00	177.17	0.90	5.33	0.13	180.60	0.15	6.20	7.90	9.60	1.20	0.60	OME17717 0533 T571
	441.00	177.17	1.02	7.00	0.15	177.80	0.15	8.20	10.70	13.20	1.50	0.60	OME17717 0700 T571

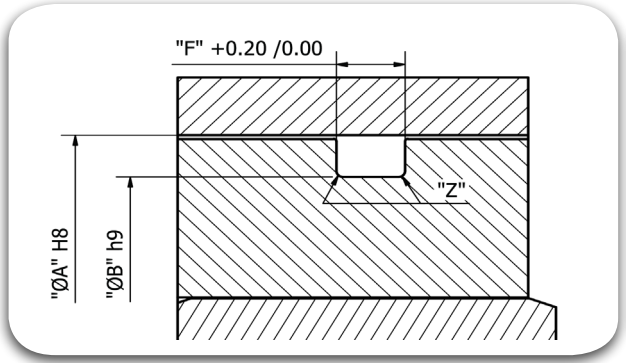

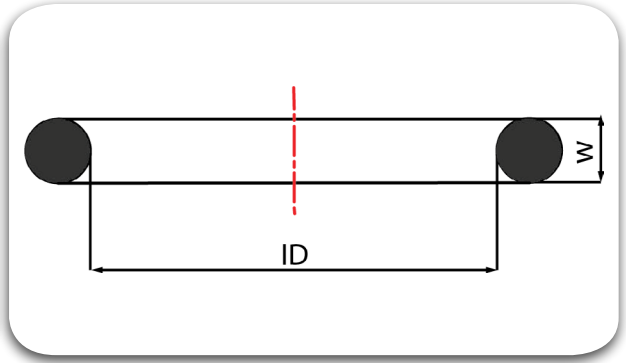

Bore Ø "A" mm	O-Ring Dimensions					Groove Dimensions					Radius		TRIADA® Part Number
	Part No.	Inner Dia. I.D		Width "W"		Groove Dia. ØB		Groove Width without back-up ring	Groove Width with 1 back-up ring	Groove Width with 2 back-up ring	Without back-up ring	With back-up ring	
		I.D mm	Tol ±mm	W mm	Tol ±mm	B mm	Tol ±mm	"F" mm	"F" mm	"F" mm	"Z" mm	"Z" mm	
195.00	169.00	190.17	1.14	2.62	0.08	190.50	0.10	3.10	4.50	5.90	0.60	0.30	OME19017 0262 T571
	263.00	183.74	1.14	3.53	0.10	188.80	0.10	4.20	5.60	7.00	1.00	0.40	OME18374 0353 T571
	366.00	183.52	1.25	5.33	0.13	185.60	0.15	6.20	7.90	9.60	1.20	0.60	OME18352 0533 T571
	441.00	177.17	1.02	7.00	0.15	182.80	0.15	8.20	10.70	13.20	1.50	0.60	OME17717 0700 T571
200.00	169.00	190.17	1.14	2.62	0.08	195.50	0.10	3.10	4.50	5.90	0.60	0.30	OME19017 0262 T571
	264.00	190.09	1.14	3.53	0.10	193.80	0.10	4.20	5.60	7.00	1.00	0.40	OME09009 0353 T571
	367.00	189.87	1.25	5.33	0.13	190.60	0.15	6.20	7.90	9.60	1.20	0.60	OME18987 0533 T571
	442.00	183.52	1.14	7.00	0.15	187.80	0.15	8.20	10.70	13.20	1.50	0.60	OME18352 0700 T571
205.00	170.00	196.52	1.14	2.62	0.08	200.50	0.10	3.10	4.50	5.90	0.60	0.30	OME19652 0262 T571
	265.00	196.44	1.14	3.53	0.10	198.80	0.10	4.20	5.60	7.00	1.00	0.40	OME19644 0353 T571
	367.00	189.87	1.25	5.33	0.13	195.60	0.15	6.20	7.90	9.60	1.20	0.60	OME18987 0533 T571
	443.00	189.87	1.14	7.00	0.15	192.80	0.15	8.20	10.70	13.20	1.50	0.60	OME18987 0700 T571
210.00	171.00	202.87	1.14	2.62	0.08	205.50	0.10	3.10	4.50	5.90	0.60	0.30	OME20287 0262 T571
	266.00	202.79	1.14	3.53	0.10	203.80	0.10	4.20	5.60	7.00	1.00	0.40	OME20279 0353 T571
	368.00	196.22	1.25	5.33	0.13	200.60	0.15	6.20	7.90	9.60	1.20	0.60	OME19622 0533 T571
	444.00	196.22	1.14	7.00	0.15	197.80	0.15	8.20	10.70	13.20	1.50	0.60	OME19622 0700 T571
215.00	172.00	209.22	1.27	2.62	0.08	210.50	0.10	3.10	4.50	5.90	0.60	0.30	OME20922 0262 T571
	266.00	202.87	1.14	3.53	0.10	208.80	0.10	4.20	5.60	7.00	1.00	0.40	OME20287 0353 T571
	369.00	202.57	1.25	5.33	0.13	205.60	0.15	6.20	7.90	9.60	1.20	0.60	OME20257 0533 T571
	445.00	202.57	1.14	7.00	0.15	203.80	0.15	8.2	10.7	13.2	1.5	0.6	OME20257 0700 T571

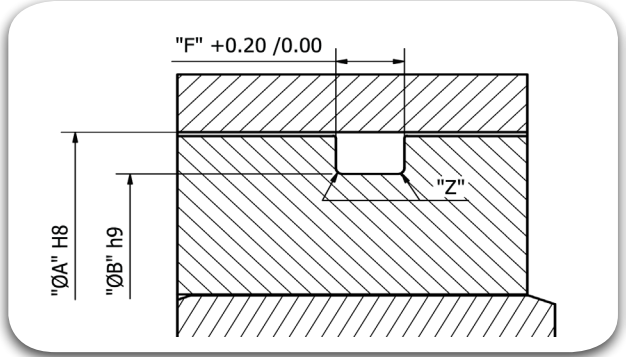

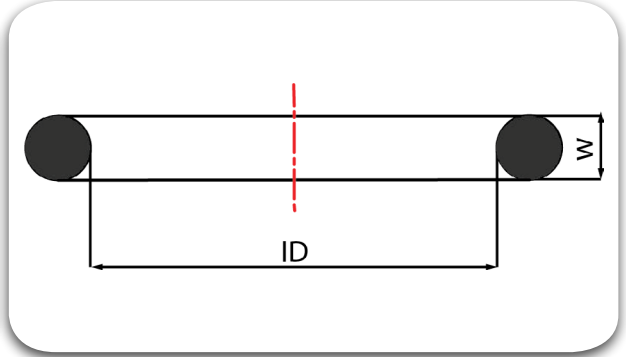

Bore Ø "A" mm	O-Ring Dimensions					Groove Dimensions					Radius		TRIADA® Part Number
	Part No.	Inner Dia. I.D		Width "W"		Groove Dia. ØB		Groove Width without back-up ring	Groove Width with 1 back-up ring	Groove Width with 2 back-up ring	Without back-up ring	With back-up ring	
		I.D mm	Tol ±mm	W mm	Tol ±mm	B mm	Tol ±mm	"F" mm	"F" mm	"F" mm	"Z" mm	"Z" mm	
220.00	173.00	215.57	1.27	2.62	0.08	215.50	0.10	3.10	4.50	5.90	0.60	0.30	OME21557 0262 T571
	267.00	209.14	1.27	3.53	0.10	213.80	0.10	4.20	5.60	7.00	1.00	0.40	OME20914 0353 T571
	370.00	208.92	1.25	5.33	0.13	210.60	0.15	6.20	7.90	9.60	1.20	0.60	OME20892 0533 T571
	445.00	202.57	1.14	7.00	0.15	207.80	0.15	8.20	10.70	13.20	1.50	0.60	OME20257 0700 T571
225.00	173.00	215.57	1.27	2.62	0.08	220.50	0.10	3.10	4.50	5.90	0.60	0.30	OME21557 0262 T571
	268.00	215.49	1.27	3.53	0.10	218.80	0.10	4.20	5.60	7.00	1.00	0.40	OME21549 0353 T571
	371.00	215.27	1.25	5.33	0.13	215.60	0.15	6.20	7.90	9.60	1.20	0.60	OME21527 0533 T571
	445.00	202.57	1.40	7.00	0.15	212.80	0.15	8.20	10.70	13.20	1.50	0.60	OME20257 0700 T571
230.00	174.00	221.92	1.27	2.62	0.08	225.50	0.10	3.10	4.50	5.90	0.60	0.30	OME22192 0262 T571
	269.00	221.84	1.27	3.53	0.10	223.80	0.10	4.20	5.60	7.00	1.00	0.40	OME22184 0353 T571
	371.00	215.27	1.25	5.33	0.13	220.60	0.15	6.20	7.90	9.60	1.20	0.60	OME21527 0533 T571
	446.00	215.27	1.40	7.00	0.15	217.80	0.15	8.20	10.70	13.20	1.50	0.60	OME21527 0700 T571
235.00	175.00	228.27	1.27	2.62	0.08	230.50	0.10	3.10	4.50	5.90	0.60	0.30	OME22127 0262 T571
	270.00	228.19	1.27	3.53	0.10	228.80	0.10	4.20	5.60	7.00	1.00	0.40	OME22819 0353 T571
	372.00	221.62	1.25	5.33	0.13	225.60	0.15	6.20	7.90	9.60	1.20	0.60	OME22162 0533 T571
	446.00	215.27	1.40	7.00	0.15	222.80	0.15	8.20	10.70	13.20	1.50	0.60	OME21527 0700 T571
240.00	176.00	234.62	1.40	2.62	0.08	235.50	0.10	3.10	4.50	5.90	0.60	0.30	OME23462 0262 T571
	270.00	228.19	1.27	3.53	0.10	233.80	0.10	4.20	5.60	7.00	1.00	0.40	OME22819 0353 T571
	373.00	227.97	1.25	5.33	0.13	230.60	0.15	6.20	7.90	9.60	1.20	0.60	OME22797 0533 T571
	447.00	227.97	1.40	7.00	0.15	227.80	0.15	8.2	10.7	13.2	1.5	0.6	OME22797 0700 T571

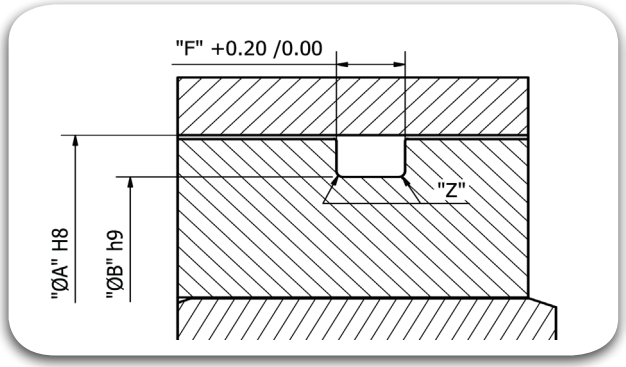

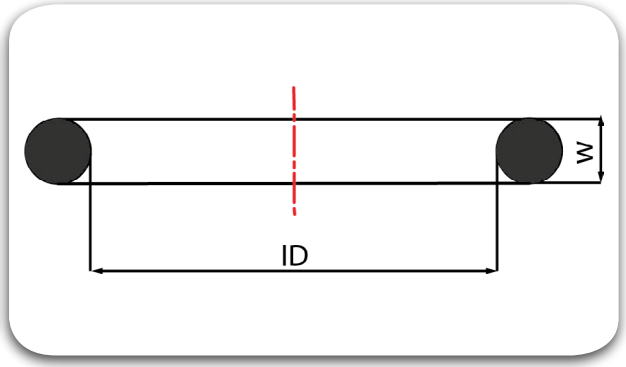

Bore Ø "A" mm	O-Ring Dimensions					Groove Dimensions					Radius		TRIADA® Part Number
	Part No.	Inner Dia. I.D		Width "W"		Groove Dia. ØB		Groove Width without back-up ring	Groove Width with 1 back-up ring	Groove Width with 2 back-up ring	Without back-up ring	With back-up ring	
		I.D mm	Tol ±mm	W mm	Tol ±mm	B mm	Tol ±mm	"F" mm	"F" mm	"F" mm	"Z" mm	"Z" mm	
245.00	176.00	234.62	1.40	2.62	0.08	240.50	0.10	3.10	4.50	5.90	0.60	0.30	OME23462 0262 T571
	271.00	234.54	1.40	3.53	0.10	238.80	0.10	4.20	5.60	7.00	1.00	0.40	OME23454 0353 T571
	374.00	234.32	1.25	5.33	0.13	235.60	0.15	6.20	7.90	9.60	1.20	0.60	OME23432 0533 T571
	447.00	227.97	1.40	7.00	0.15	232.80	0.15	8.20	10.70	13.20	1.50	0.60	OME22797 0700 T571
250.00	177.00	240.97	1.40	2.62	0.08	245.50	0.10	3.10	4.50	5.90	0.60	0.30	OME24097 0262 T571
	272.00	240.89	1.40	3.53	0.10	243.80	0.10	4.20	5.60	7.00	1.00	0.40	OME24089 0353 T571
	375.00	240.67	1.25	5.33	0.13	240.60	0.15	6.20	7.90	9.60	1.20	0.60	OME24067 0533 T571
	447.00	227.97	1.40	7.00	0.15	237.80	0.15	8.20	10.70	13.20	1.50	0.60	OME22797 0700 T571
260.00	178.00	247.32	1.40	2.62	0.08	255.50	0.10	3.10	4.50	5.90	0.60	0.30	OME24732 0262 T571
	273.00	247.25	1.40	3.53	0.10	253.80	0.10	4.20	5.60	7.00	1.00	0.40	OME24725 0353 T571
	376.00	247.02	1.25	5.33	0.13	250.60	0.15	6.20	7.90	9.60	1.20	0.60	OME24702 0533 T571
	448.00	240.70	1.40	7.00	0.15	247.80	0.15	8.20	10.70	13.20	1.50	0.60	OME24070 0700 T571
270.00	274.00	253.60	1.40	3.53	0.10	263.80	0.10	4.20	5.60	7.00	1.00	0.40	OME25360 0353 T571
	377.00	253.37	1.25	5.33	0.13	260.60	0.15	6.20	7.90	9.60	1.20	0.60	OME25337 0533 T571
	449.00	253.40	1.40	7.00	0.15	257.80	0.15	8.20	10.70	13.20	1.50	0.60	OME25340 0700 T571
280.00	275.00	266.29	1.40	3.53	0.10	273.80	0.10	4.20	5.60	7.00	1.00	0.40	OME26629 0353 T571
	378.00	266.07	1.25	5.33	0.13	270.60	0.15	6.20	7.90	9.60	1.20	0.60	OME26607 0533 T571
	450.00	266.10	1.52	7.00	0.15	267.80	0.15	8.20	10.70	13.20	1.50	0.60	OME26610 0700 T571

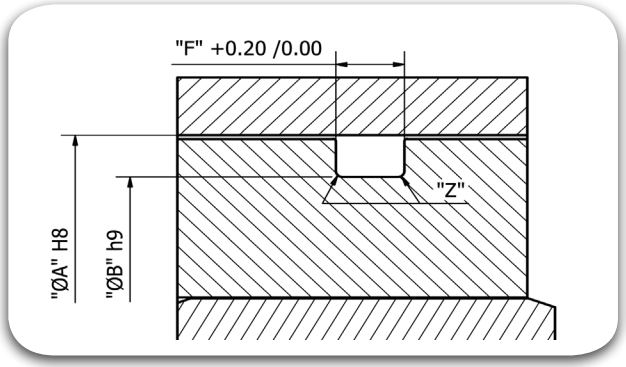

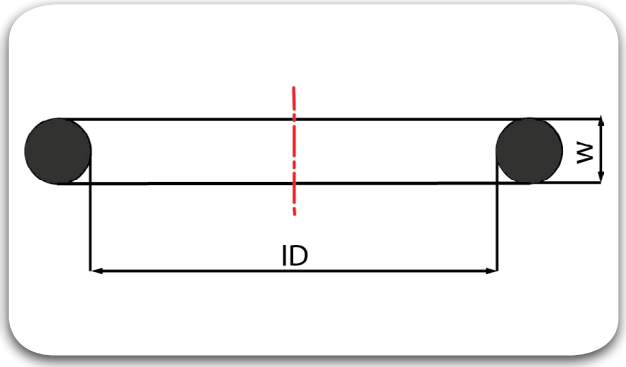

Bore Ø "A" mm	O-Ring Dimensions					Groove Dimensions					Radius		TRIADA® Part Number
	Part No.	Inner Dia. I.D		Width "W"		Groove Dia. ØB		Groove Width without back-up ring	Groove Width with 1 back-up ring	Groove Width with 2 back-up ring	Without back-up ring	With back-up ring	
		I.D mm	Tol ±mm	W mm	Tol ±mm	B mm	Tol ±mm	"F" mm	"F" mm	"F" mm	"Z" mm	"Z" mm	
290.00	276.00	278.99	1.65	3.53	0.10	283.80	0.10	4.20	5.60	7.00	1.00	0.40	OME27899 0353 T571
	379.00	278.77	1.25	5.33	0.13	280.60	0.15	6.20	7.90	9.60	1.20	0.60	OME27877 0533 T571
	450.00	266.10	1.52	7.00	0.15	277.80	0.15	8.20	10.70	13.20	1.50	0.60	OME26610 0700 T571
300.00	277.00	291.69	1.65	3.53	0.10	293.80	0.10	4.20	5.60	7.00	1.00	0.40	OME29169 0353 T571
	379.00	278.77	1.25	5.33	0.13	290.60	0.15	6.20	7.90	9.60	1.20	0.60	OME27877 0533 T571
	451.00	278.77	1.52	7.00	0.15	287.80	0.15	8.20	10.70	13.20	1.50	0.60	OME27877 0700 T571
310.00	277.00	291.69	1.65	3.53	0.10	303.80	0.10	4.20	5.60	7.00	1.00	0.40	OME29169 0353 T571
	380.00	291.47	1.25	5.33	0.13	300.60	0.15	6.20	7.90	9.60	1.20	0.60	OME29147 0533 T571
	452.00	291.47	1.52	7.00	0.15	297.80	0.15	8.20	10.70	13.20	1.50	0.60	OME29147 0700 T571
320.00	278.00	304.39	1.65	3.53	0.10	313.80	0.10	4.20	5.60	7.00	1.00	0.40	OME30437 0353 T571
	381.00	304.17	1.25	5.33	0.13	310.60	0.15	6.20	7.90	9.60	1.20	0.60	OME30417 0533 T571
	453.00	304.20	1.52	7.00	0.15	307.80	0.15	8.20	10.70	13.20	1.50	0.60	OME30420 0700 T571
330.00	278.00	304.39	1.65	3.53	0.10	323.80	0.10	4.20	5.60	7.00	1.00	0.40	OME30439 0353 T571
	381.00	304.17	1.25	5.33	0.13	320.60	0.15	6.20	7.90	9.60	1.20	0.60	OME30417 0533 T571
	454.00	316.90	1.52	7.00	0.15	317.80	0.15	8.20	10.70	13.20	1.50	0.60	OME31690 0700 T571
340.00	279.00	329.79	1.65	3.53	0.10	333.80	0.10	4.20	5.60	7.00	1.00	0.40	OME32979 0353 T571
	382.00	329.57	1.25	5.33	0.13	330.60	0.15	6.20	7.90	9.60	1.20	0.60	OME32957 0533 T571
	454.00	316.90	1.52	7.00	0.15	327.80	0.15	8.20	10.70	13.20	1.50	0.60	OME31690 0700 T571

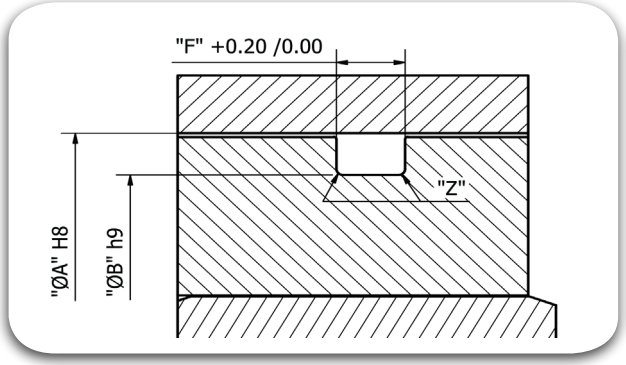

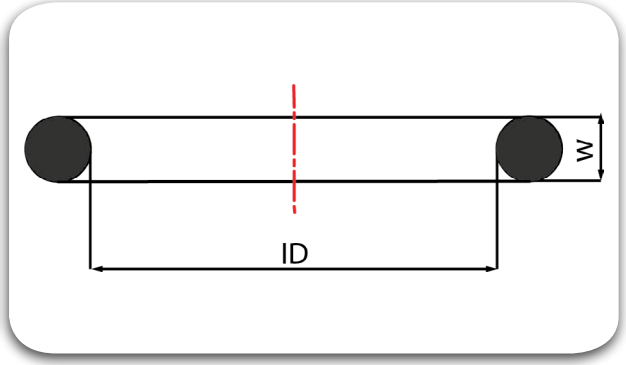

Bore Ø "A" mm	O-Ring Dimensions					Groove Dimensions					Radius		TRIADA® Part Number
	Part No.	Inner Dia. I.D		Width "W"		Groove Dia. ØB		Groove Width without back-up ring	Groove Width with 1 back-up ring	Groove Width with 2 back-up ring	Without back-up ring	With back-up ring	
		I.D mm	Tol ±mm	W mm	Tol ±mm	B mm	Tol ±mm	"F" mm	"F" mm	"F" mm	"Z" mm	"Z" mm	
350.00	279.00	329.79	1.65	3.53	0.10	343.80	0.10	4.20	5.60	7.00	1.00	0.40	OME32979 0353 T571
	382.00	329.57	1.25	5.33	0.13	340.60	0.15	6.20	7.90	9.60	1.20	0.60	OME32957 0533 T571
	455.00	329.60	1.52	7.00	0.15	337.80	0.15	8.20	10.70	13.20	1.50	0.60	OME32960 0700 T571
360.00	280.00	355.19	1.65	3.53	0.10	353.80	0.10	4.20	5.60	7.00	1.00	0.40	OME35519 0353 T571
	382.00	329.57	1.25	5.33	0.13	350.60	0.15	6.20	7.90	9.60	1.20	0.60	OME32957 0533 T571
	456.00	342.30	1.78	7.00	0.15	347.80	0.15	8.20	10.70	13.20	1.50	0.60	OME34230 0700 T571
370.00	280.00	355.19	1.65	3.53	0.10	363.80	0.10	4.20	5.60	7.00	1.00	0.40	OME35519 0353 T571
	383.00	354.97	1.25	5.33	0.13	360.60	0.15	6.20	7.90	9.60	1.20	0.60	OME35497 0533 T571
	457.00	355.00	1.78	7.00	0.15	357.80	0.15	8.20	10.70	13.20	1.50	0.60	OME35500 0700 T571
380.00	280.00	355.19	1.65	3.53	0.10	373.80	0.10	4.20	5.60	7.00	1.00	0.40	OME35519 0353 T571
	383.00	354.97	1.25	5.33	0.13	370.60	0.15	6.20	7.90	9.60	1.20	0.60	OME35497 0533 T571
	458.00	367.70	1.78	7.00	0.15	367.80	0.15	8.20	10.70	13.20	1.50	0.60	OME36770 0700 T571
390.00	281.00	380.59	1.65	3.53	0.10	383.80	0.10	4.20	5.60	7.00	1.00	0.40	OME38059 0353 T571
	384.00	380.37	1.25	5.33	0.13	380.60	0.15	6.20	7.90	9.60	1.20	0.60	OME38037 0533 T571
	458.00	367.67	1.78	7.00	0.15	377.80	0.15	8.20	10.70	13.20	1.50	0.60	OME36767 0700 T571
400.00	281.00	380.59	1.65	3.53	0.10	393.80	0.10	4.20	5.60	7.00	1.00	0.40	OME38059 0353 T571
	384.00	380.37	1.25	5.33	0.13	390.60	0.15	6.20	7.90	9.60	1.20	0.60	OME38037 0533 T571
	459.00	380.37	1.78	7.00	0.15	387.80	0.15	8.20	10.70	13.20	1.50	0.60	OME38037 0700 T571

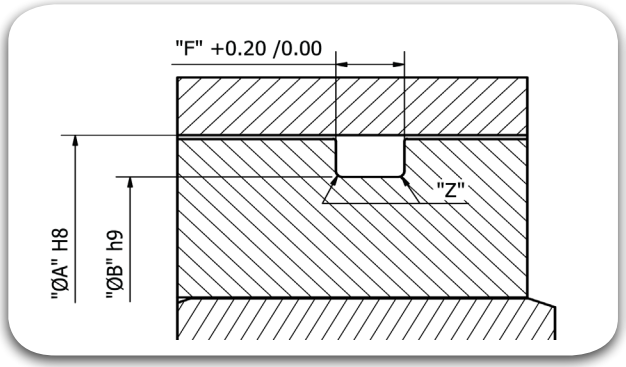

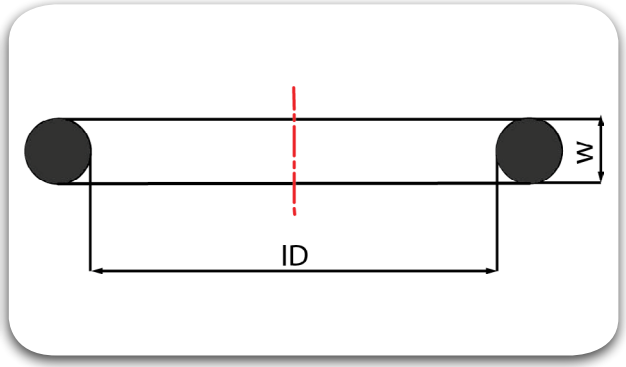

Bore Ø "A" mm	O-Ring Dimensions					Groove Dimensions					Radius		TRIADA® Part Number
	Part No.	Inner Dia. I.D		Width "W"		Groove Dia. ØB		Groove Width without back-up ring	Groove Width with 1 back-up ring	Groove Width with 2 back-up ring	Without back-up ring	With back-up ring	
		I.D mm	Tol ±mm	W mm	Tol ±mm	B mm	Tol ±mm	"F" mm	"F" mm	"F" mm	"Z" mm	"Z" mm	
410.00	282.00	405.26	2.15	3.53	0.10	403.80	0.10	4.20	5.60	7.00	1.00	0.40	OME40526 0353 T571
	384.00	380.37	1.25	5.33	0.13	400.60	0.15	6.20	7.90	9.60	1.20	0.60	OME38037 0533 T571
	460.00	393.07	1.78	7.00	0.15	397.80	0.15	8.20	10.70	13.20	1.50	0.60	OME39307 0700 T571
420.00	282.00	405.26	2.15	3.53	0.10	413.80	0.10	4.20	5.60	7.00	1.00	0.40	OME40526 0353 T571
	385.00	405.26	1.90	5.33	0.13	410.60	0.15	6.20	7.90	9.60	1.20	0.60	OME40526 0533 T571
	461.00	405.26	2.00	7.00	0.15	407.80	0.15	8.20	10.70	13.20	1.50	0.60	OME40526 0700 T571
430.00	282.00	405.26	2.15	3.53	0.10	423.80	0.10	4.20	5.60	7.00	1.00	0.40	OME40526 0353 T571
	385.00	405.26	1.90	5.33	0.13	420.60	0.15	6.20	7.90	9.60	1.20	0.60	OME40526 0533 T571
	462.00	417.96	2.00	7.00	0.15	417.80	0.15	8.20	10.70	13.20	1.50	0.60	OME41796 0700 T571
440.00	283.00	430.66	2.15	3.53	0.10	433.80	0.10	4.20	5.60	7.00	1.00	0.40	OME43066 0353 T571
	386.00	430.65	1.90	5.33	0.13	430.60	0.15	6.20	7.90	9.60	1.20	0.60	OME43065 0533 T571
	462.00	417.96	2.00	7.00	0.15	427.80	0.15	8.20	10.70	13.20	1.50	0.60	OME41796 0700 T571
450.00	283.00	430.66	2.15	3.53	0.10	443.80	0.10	4.20	5.60	7.00	1.00	0.40	OME43066 0353 T571
	386.00	430.65	1.90	5.33	0.13	440.60	0.15	6.20	7.90	9.60	1.20	0.60	OME43065 0533 T571
	463.00	430.65	2.00	7.00	0.15	437.80	0.15	8.20	10.70	13.20	1.50	0.60	OME43065 0700 T571
460.00	283.00	430.66	2.15	3.53	0.10	453.80	0.10	4.20	5.60	7.00	1.00	0.40	OME43066 0353 T571
	386.00	430.65	1.90	5.33	0.13	450.60	0.15	6.20	7.90	9.60	1.20	0.60	OME43065 0533 T571
	464.00	443.36	2.00	7.00	0.15	447.80	0.15	8.20	10.70	13.20	1.50	0.60	OME44336 0700 T571

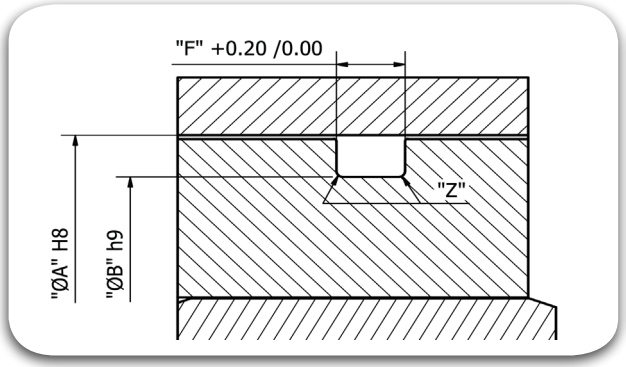

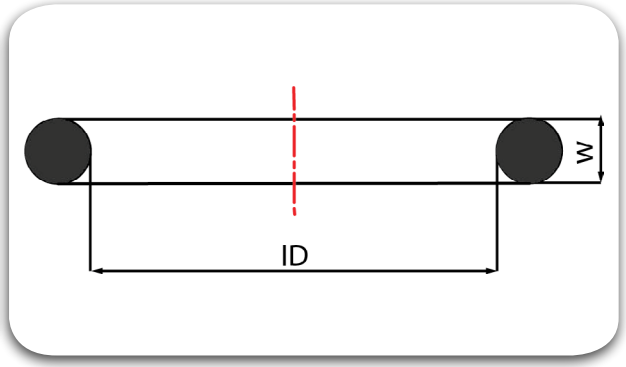

Bore Ø "A" mm	O-Ring Dimensions					Groove Dimensions					Radius		TRIADA® Part Number
	Part No.	Inner Dia. I.D		Width "W"		Groove Dia. ØB		Groove Width without back-up ring	Groove Width with 1 back-up ring	Groove Width with 2 back-up ring	Without back-up ring	With back-up ring	
		I.D mm	Tol ±mm	W mm	Tol ±mm	B mm	Tol ±mm	"F" mm	"F" mm	"F" mm	"Z" mm	"Z" mm	
470.00	284.00	456.06	2.15	3.53	0.10	463.80	0.10	4.20	5.60	7.00	1.00	0.40	OME45606 0353 T571
	387.00	456.06	1.90	5.33	0.13	460.60	0.15	6.20	7.90	9.60	1.20	0.60	OME45606 0533 T571
	465.00	456.06	2.00	7.00	0.15	457.80	0.15	8.20	10.70	13.20	1.50	0.60	OME45606 0700 T571
480.00	284.00	456.06	2.15	3.53	0.10	473.80	0.10	4.20	5.60	7.00	1.00	0.40	OME45606 0353 T571
	387.00	456.06	1.90	5.33	0.13	470.60	0.15	6.20	7.90	9.60	1.20	0.60	OME45606 0533 T571
	465.00	456.06	2.00	7.00	0.15	467.80	0.15	8.20	10.70	13.20	1.50	0.60	OME45606 0700 T571
490.00	387.00	456.06	1.90	5.33	0.13	480.60	0.15	6.20	7.90	9.60	1.20	0.60	OME45606 0533 T571
	466.00	468.76	2.00	7.00	0.15	477.80	0.15	8.20	10.70	13.20	1.50	0.60	OME46876 0700 T571
500.00	388.00	481.38	1.90	5.33	0.13	490.60	0.15	6.20	7.90	9.60	1.20	0.60	OME48138 0533 T571
	467.00	481.46	2.00	7.00	0.15	487.80	0.15	8.20	10.70	13.20	1.50	0.60	OME48146 0700 T571
510.00	389.00	481.38	1.90	5.33	0.13	500.60	0.15	6.20	7.90	9.60	1.20	0.60	OME48138 0533 T571
	469.00	494.16	2.00	7.00	0.15	497.80	0.15	8.20	10.70	13.20	1.50	0.60	OME49416 0700 T571
520.00	389.00	506.78	1.90	5.33	0.13	510.60	0.15	6.20	7.90	9.60	1.20	0.60	OME50678 0533 T571
	469.00	506.86	2.00	7.00	0.15	507.80	0.15	8.20	10.70	13.20	1.50	0.60	OME50686 0700 T571
530.00	389.00	506.78	1.90	5.33	0.13	520.60	0.15	6.20	7.90	9.60	1.20	0.60	OME50678 0533 T571
	469.00	506.86	2.00	7.00	0.15	517.80	0.15	8.20	10.70	13.20	1.50	0.60	OME50686 0700 T571
540.00	390.00	532.18	1.90	5.33	0.13	530.60	0.15	6.20	7.90	9.60	1.20	0.60	OME53218 0533 T571
	469.00	506.86	2.00	7.00	0.15	527.80	0.15	8.20	10.70	13.20	1.50	0.60	OME50686 0700 T571

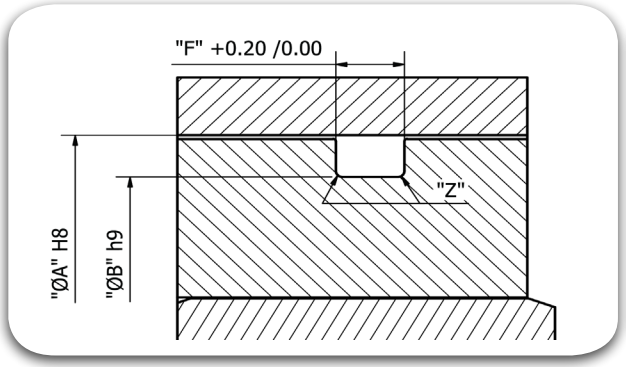

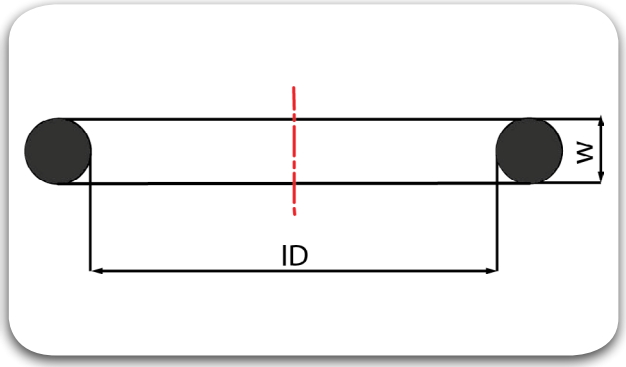

Bore Ø "A" mm	O-Ring Dimensions					Groove Dimensions					Radius		TRIADA® Part Number
	Part No.	Inner Dia. I.D		Width "W"		Groove Dia. ØB		Groove Width without back-up ring	Groove Width with 1 back-up ring	Groove Width with 2 back-up ring	Without back-up ring	With back-up ring	
		I.D mm	Tol ±mm	W mm	Tol ±mm	B mm	Tol ±mm	"F" mm	"F" mm	"F" mm	"Z" mm	"Z" mm	
550.00	390.00	532.18	1.90	5.33	0.13	540.60	0.15	6.20	7.90	9.60	1.20	0.60	OME53218 0533 T571
	470.00	532.26	2.00	7.00	0.15	537.80	0.15	8.20	10.70	13.20	1.50	0.60	OME53226 0700 T571
560.00	390.00	532.18	1.90	5.33	0.13	550.60	0.15	6.20	7.90	9.60	1.20	0.60	OME53218 0533 T571
	ASA 100	545.47	2.55	7.00	0.15	547.80	0.15	8.20	10.70	13.20	1.50	0.60	OME54547 0700 T571
570.00	391.00	557.58	1.90	5.33	0.13	560.60	0.15	6.20	7.90	9.60	1.20	0.60	OME55758 0533 T571
	471.00	557.66	2.00	7.00	0.15	557.80	0.15	8.20	10.70	13.20	1.50	0.60	OME55766 0700 T571
580.00	391.00	557.58	1.90	5.33	0.13	570.60	0.15	6.20	7.90	9.60	1.20	0.60	OME55758 0533 T571
	471.00	557.66	2.00	7.00	0.15	567.80	0.15	8.20	10.70	13.20	1.50	0.60	OME55766 0700 T571
590.00	391.00	557.58	1.90	5.33	0.13	580.60	0.15	6.20	7.90	9.60	1.20	0.60	OME55758 0533 T571
	471.00	557.66	2.00	7.00	0.15	577.80	0.15	8.20	10.70	13.20	1.50	0.60	OME55766 0700 T571
600.00	392.00	582.68	2.40	5.33	0.13	590.60	0.15	6.20	7.90	9.60	1.20	0.60	OME58268 0533 T571
	472.00	582.68	2.40	7.00	0.15	587.80	0.15	8.20	10.70	13.20	1.50	0.60	OME58268 0700 T571
610.00	392.00	582.68	2.40	5.33	0.13	600.60	0.15	6.20	7.90	9.60	1.20	0.60	OME58268 0533 T571
	ASA 104	596.27	2.80	7.00	0.15	597.80	0.15	8.20	10.70	13.20	1.50	0.60	OME59627 0700 T571
620.00	393.00	608.08	2.40	5.33	0.13	610.60	0.15	6.20	7.90	9.60	1.20	0.60	OME60808 0533 T571
	ASA 104	596.27	2.80	7.00	0.15	607.80	0.15	8.20	10.70	13.20	1.50	0.60	OME59627 0700 T571
630.00	393.00	608.08	2.40	5.33	0.13	620.60	0.15	6.20	7.90	9.60	1.20	0.60	OME60808 0533 T571
	473.00	608.08	2.40	7.00	0.15	617.80	0.15	8.20	10.70	13.20	1.50	0.60	OME60808 0700 T571

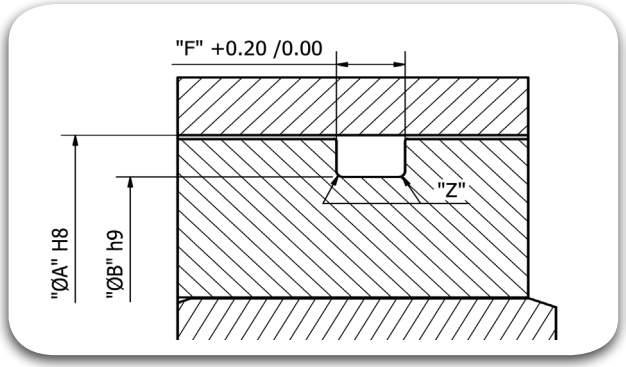

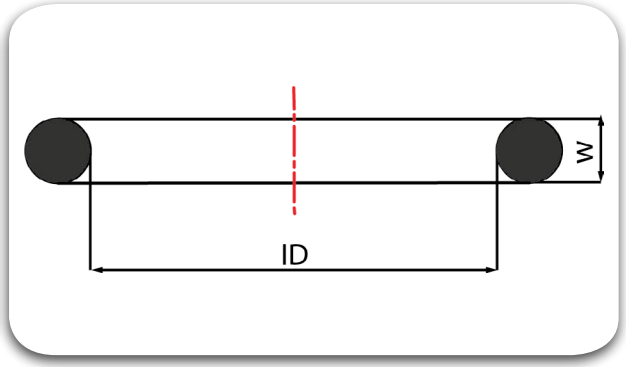

Bore Ø "A" mm	O-Ring Dimensions					Groove Dimensions					Radius		TRIADA® Part Number
	Part No.	Inner Dia. I.D		Width "W"		Groove Dia. ØB		Groove Width without back-up ring	Groove Width with 1 back-up ring	Groove Width with 2 back-up ring	Without back-up ring	With back-up ring	
		I.D mm	Tol ±mm	W mm	Tol ±mm	B mm	Tol ±mm	"F" mm	"F" mm	"F" mm	"Z" mm	"Z" mm	
640.00	393.00	608.08	2.40	5.33	0.13	630.60	0.15	6.20	7.90	9.60	1.20	0.60	OME60808 0533 T571
	473.00	608.08	2.40	7.00	0.15	627.80	0.15	8.20	10.70	13.20	1.50	0.60	OME60808 0700 T571
650.00	394.00	633.48	2.40	5.33	0.13	640.60	0.15	6.20	7.90	9.60	1.20	0.60	OME63348 0533 T571
	474.00	633.48	2.40	7.00	0.15	637.80	0.15	8.20	10.70	13.20	1.50	0.60	OME63348 0700 T571
660.00	394.00	633.48	2.40	5.33	0.13	650.60	0.15	6.20	7.90	9.60	1.20	0.60	OME63348 0533 T571
	ASA 108	647.07	3.05	7.00	0.15	647.80	0.15	8.20	10.70	13.20	1.50	0.60	OME64707 0700 T571
670.00	395.00	658.88	2.40	5.33	0.13	660.60	0.15	6.20	7.90	9.60	1.20	0.60	OME65888 0533 T571
	ASA 108	647.07	3.05	7.00	0.15	657.80	0.15	8.20	10.70	13.20	1.50	0.60	OME64707 0700 T571
680.00	395.00	658.88	2.40	5.33	0.13	670.60	0.15	6.20	7.90	9.60	1.20	0.60	OME65888 0533 T571
	475.00	658.88	2.40	7.00	0.15	667.80	0.15	8.20	10.70	13.20	1.50	0.60	OME65888 0700 T571
690.00	395.00	658.88	2.40	5.33	0.13	680.60	0.15	6.20	7.90	9.60	1.20	0.60	OME65888 0533 T571
	475.00	658.88	2.40	7.00	0.15	677.80	0.15	8.20	10.70	13.20	1.50	0.60	OME65888 0700 T571
700.00	475.00	658.88	2.40	7.00	0.15	687.80	0.15	8.20	10.70	13.20	1.50	0.60	OME65888 0700 T571

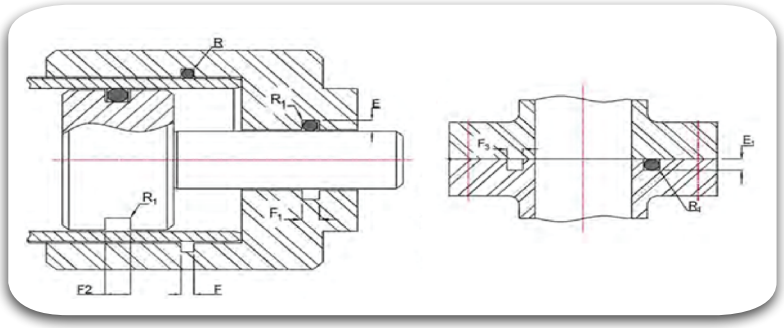

Sl No.	Cross Section W (mm)	Radial Dynamic and Static				Axial-Static		Radius	
		Groove Depth E (mm) Tol. + 0.05	Groove Width F (mm) Tol. + 0.2	Groove Width with 1 Back-up Ring F_1 (mm) Tol. + 0.2	Groove Width with 2 Back-up Ring F_2 (mm) Tol. + 0.2	Groove Depth E_1 (mm) Tol. + 0.2	Groove Width F_3 (mm) Tol. + 0.2	Without Back-up Ring R (mm)	With Back-up Ring R_1 (mm)
1	0.40	0.28	0.60	-	-	0.26	0.30	-	-
2	0.50	0.35	0.70	-	-	0.35	0.70	-	-
3	0.60	0.45	0.80	-	-	0.40	0.80	-	-
4	1.00 and 1.02	0.80	1.40	-	-	0.65	1.40	0.20	-
5	1.10, 1.12 and 1.15	0.90	1.50	-	-	0.75	1.50	0.20	-
6	1.20	0.95	1.70	-	-	0.80	1.70	0.20	-
7	1.25 and 1.27	1.00	1.80	-	-	0.85	1.80	0.20	-
8	1.30	1.05	1.80	-	-	0.90	1.80	0.20	-
9	1.42 and 1.45	1.15	1.90	-	-	0.95	1.90	0.20	-
10	1.50 and 1.52	1.20	1.90	2.90	3.90	1.00	2.10	0.20	0.20
11	1.57, 1.60 and 1.63	1.30	2.00	3.00	4.00	1.10	2.20	0.30	0.20
12	1.78 and 1.80	1.45	2.20	3.60	5.00	1.20	2.40	0.40	0.20
13	1.83	1.50	2.30	3.70	5.10	1.25	2.40	0.50	0.20
14	1.90, 1.98, 2.00 and 2.02	1.65	2.50	3.90	5.30	1.40	2.50	0.50	0.20
15	2.08 and 2.10	1.70	2.60	4.00	5.40	1.45	2.80	0.50	0.20
16	2.20 and 2.21	1.85	2.70	4.10	5.50	1.55	2.90	0.50	0.30
17	2.26	1.85	2.80	4.20	5.60	1.55	3.00	0.50	0.30

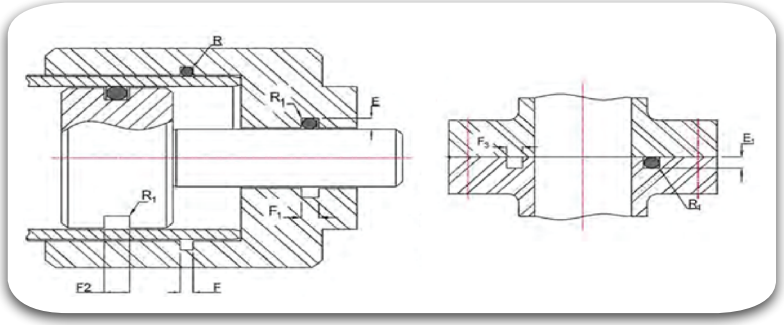

Sl No.	Cross Section W (mm)	Radial Dynamic and Static				Axial-Static		Radius	
		Groove Depth E (mm) Tol. + 0.05	Groove Width F (mm) Tol. + 0.2	Groove Width with 1 Back-up Ring F_1 (mm) Tol. + 0.2	Groove Width with 2 Back-up Ring F_2 (mm) Tol. + 0.2	Groove Depth E_1 (mm) Tol. + 0.2	Groove Width F_3 (mm) Tol. + 0.2	Without Back-up Ring R (mm)	With Back-up Ring R_1 (mm)
18	2.30	1.90	2.80	4.20	5.60	1.60	3.00	0.50	0.30
19	2.40	2.00	2.90	4.30	5.70	1.70	3.20	0.50	0.30
20	2.46	2.05	3.00	4.40	5.80	1.75	3.30	0.50	0.30
21	2.50	2.10	3.00	4.40	5.80	1.80	3.40	0.50	0.30
22	2.60, 2.62 and 2.65	2.25	3.10	4.50	5.90	1.90	3.60	0.60	0.30
23	2.70 and 2.75	2.30	3.40	4.80	6.20	1.95	3.70	0.60	0.30
24	2.95 and 3.00	2.50	3.60	5.00	6.40	2.20	3.90	0.80	0.30
25	3.15	2.70	3.80	5.20	6.60	2.30	4.00	0.80	0.40
26	3.50, 3.53, 3.55 and 3.60	3.10	4.20	5.60	7.00	2.70	4.80	1.00	0.40
27	4.00	3.50	4.70	6.40	8.10	3.10	5.40	1.00	0.40
28	4.50	4.00	5.20	6.90	8.30	3.40	6.00	1.00	0.40
29	5.00	4.30	6.00	7.70	9.40	3.90	6.70	1.00	0.40
30	5.30 and 5.33	4.70	6.20	7.90	9.60	4.30	7.10	1.20	0.60
31	5.50	4.80	6.40	8.10	9.80	4.40	7.30	1.20	0.60
32	5.70 and 5.80	5.00	6.70	8.40	10.10	4.60	7.70	1.20	0.60
33	6.00	5.30	6.90	8.60	10.30	4.80	8.20	1.20	0.60
34	6.30 and 6.35	5.60	7.30	9.00	10.70	5.10	8.70	1.20	0.60

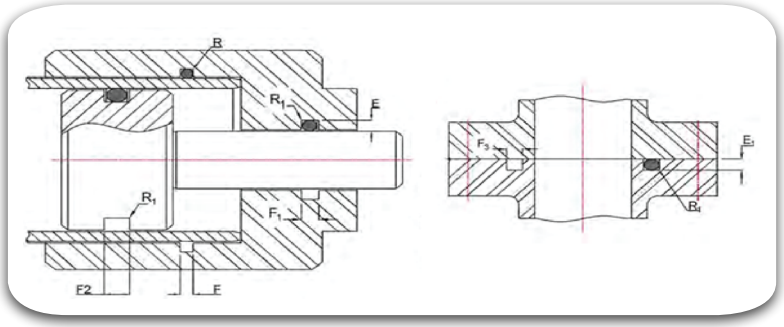

Sl. No.	Cross Section W (mm)	Radial Dynamic and Static				Axial-Static		Radius	
		Groove Depth E (mm) Tol. + 0.05	Groove Width F (mm) Tol. + 0.2	Groove Width with 1 Back-up Ring F_1 (mm) Tol. + 0.2	Groove Width with 2 Back-up Ring F_2 (mm) Tol. + 0.2	Groove Depth E_1 (mm) Tol. + 0.2	Groove Width F_3 (mm) Tol. + 0.2	Without Back-up Ring R (mm)	With Back-up Ring R_1 (mm)
35	6.50	5.70	7.60	9.30	11.00	5.40	8.90	1.20	0.60
36	6.99 and 7.00	6.10	8.20	10.70	13.20	5.80	9.50	1.50	0.60
37	7.20	6.20	8.50	11.00	13.50	5.90	9.80	1.50	0.60
38	7.50	6.50	8.80	11.30	13.80	6.20	10.40	1.50	0.60
39	8.00	7.00	9.30	11.80	14.30	6.60	11.00	1.50	0.60
40	8.20	7.10	9.60	12.10	14.60	6.70	11.20	1.50	0.60
41	8.40	7.50	9.70	12.20	14.70	6.90	11.70	2.00	0.60
42	9.00	7.80	10.60	13.10	15.60	7.40	12.50	2.00	0.60
43	9.50	8.30	11.10	13.60	16.10	7.80	13.30	2.00	0.60
44	10.00	8.70	11.70	14.20	16.70	8.30	13.50	2.00	0.60
45	11.00	9.60	12.90	15.40	17.90	9.10	15.50	3.00	0.60
46	12.00	10.50	14.00	16.50	19.00	10.30	16.80	3.00	0.60
47	14.00	12.20	16.40	18.90	21.40	11.60	19.00	3.00	0.60
48	15.00	13.20	17.40	19.90	22.40	12.50	20.00	3.00	0.60
49	16.00	14.00	18.70	21.20	23.70	13.50	21.50	3.00	0.60

O-Ring JIS2401 Sizes “P” Style:

Size	Actual Size (mm)			
	I.D.	±	W	±
P3	2.80	0.14	1.90	0.08
P4	3.80	0.14	1.90	0.08
P5	4.80	0.15	1.90	0.08
P6	5.80	0.15	1.90	0.08
P7	6.80	0.16	1.90	0.08
P8	7.80	0.16	1.90	0.08
P9	8.80	0.17	1.90	0.08
P010	9.80	0.17	1.90	0.08
P010A	9.80	0.17	2.40	0.09
P011	10.80	0.18	2.40	0.09
P011.2	11.00	0.18	2.40	0.09
P012	11.80	0.19	2.40	0.09
P012.5	12.30	0.19	2.40	0.09
P014	13.80	0.19	2.40	0.09
P015	14.80	0.20	2.40	0.09
P016	15.80	0.20	2.40	0.09
P018	17.80	0.20	2.40	0.09
P020	19.80	0.22	2.40	0.09
P021	20.80	0.23	2.40	0.09
P022	21.80	0.24	2.40	0.09
P022A	21.70	0.24	3.50	0.10
P022.4	22.10	0.24	3.50	0.10
P024	23.70	0.24	3.50	0.10
P025	24.7	0.25	3.50	0.10
P25.5	25.2	0.25	3.50	0.10
P26	25.7	0.26	3.50	0.10
P28	27.7	0.28	3.50	0.10

Size	Actual Size (mm)			
	I.D.	±	W	±
P29	28.70	0.29	3.50	0.10
P29.5	29.20	0.29	3.50	0.10
P30	29.70	0.29	3.50	0.10
P31	30.70	0.30	3.50	0.10
P31.5	31.20	0.31	3.50	0.10
P32	31.70	0.31	3.50	0.10
P34	33.70	0.33	3.50	0.10
P35	34.70	0.34	3.50	0.10
P35.5	35.20	0.34	3.50	0.10
P36	35.70	0.34	3.50	0.10
P38	37.70	0.37	3.50	0.10
P39	38.70	0.37	3.50	0.10
P40	39.70	0.37	3.50	0.10
P41	40.70	0.38	3.50	0.10
P42	41.70	0.39	3.50	0.10
P44	43.70	0.41	3.50	0.10
P45	44.70	0.41	3.50	0.10
P46	45.70	0.42	3.50	0.10
P48	47.70	0.44	3.50	0.10
P49	48.70	0.45	3.50	0.10
P50	49.70	0.45	3.50	0.10
P48A	47.60	0.44	3.50	0.10
P50A	49.60	0.45	3.50	0.10
P52	51.60	0.47	5.70	0.13
P53	52.60	0.48	5.70	0.13
P55	54.60	0.49	5.70	0.13
P56	55.60	0.50	5.70	0.13

Size	Actual Size (mm)			
	I.D.	±	W	±
P58	57.60	0.52	5.70	0.13
P60	59.60	0.53	5.70	0.13
P62	61.60	0.55	5.70	0.13
P63	62.60	0.56	5.70	0.13
P65	64.60	0.57	5.70	0.13
P67	66.60	0.59	5.70	0.13
P70	69.60	0.61	5.70	0.13
P71	70.60	0.62	5.70	0.13
P75	74.60	0.65	5.70	0.13
P80	79.60	0.69	5.70	0.13
P85	84.60	0.73	5.70	0.13
P90	89.60	0.77	5.70	0.13
P95	94.60	0.81	5.70	0.13
P100	99.60	0.84	5.70	0.13
P102	101.60	0.85	5.70	0.13
P105	104.60	0.87	5.70	0.13
P110	109.60	0.91	5.70	0.13
P112	111.60	0.92	5.70	0.13
P115	114.60	0.94	5.70	0.13
P120	119.60	0.98	5.70	0.13
P125	124.60	0.10	5.70	0.13
P130	129.60	0.11	5.70	0.13
P132	131.60	0.11	5.70	0.13
P135	134.60	0.11	5.70	0.13
P140	139.60	0.11	5.70	0.13
P145	144.60	0.12	5.70	0.13
P150	149.60	0.12	5.70	0.13

O-Ring JIS2401 Sizes “P” Style:

Size	Actual Size (mm)			
	I.D.	±	W	±
P215	214.50	0.17	8.40	0.15
P220	219.50	0.17	8.40	0.15
P225	224.50	0.17	8.40	0.15
P230	229.50	0.18	8.40	0.15
P235	234.50	0.18	8.40	0.15
P240	239.50	0.18	8.40	0.15
P245	244.50	0.18	8.40	0.15
P250	249.50	0.19	8.40	0.15
P255	254.50	0.19	8.40	0.15
P260	259.50	0.19	8.40	0.15
P265	264.50	0.20	8.40	0.15
P270	269.50	0.20	8.40	0.15
P275	274.50	0.20	8.40	0.15
P280	279.50	0.21	8.40	0.15

Size	Actual Size (mm)			
	I.D.	±	W	±
P285	284.50	0.21	8.40	0.15
P290	289.50	0.21	8.40	0.15
P295	294.50	0.22	8.40	0.15
P300	299.50	0.22	8.40	0.15
P315	314.50	0.23	8.40	0.15
P320	319.50	0.23	8.40	0.15
P335	334.50	0.24	8.40	0.15
P340	339.50	0.25	8.40	0.15
P355	354.50	0.25	8.40	0.15
P360	359.50	0.26	8.40	0.15
P375	374.50	0.27	8.40	0.15
P385	384.50	0.27	8.40	0.15
P400	399.50	0.28	8.40	0.15

O-Ring JIS2401 Sizes “G” Style:

Size	Actual Size (mm)			
	I.D.	±	W	±
G025	24.40	0.25	3.10	0.10
G030	29.40	0.29	3.10	0.10
G035	34.40	0.33	3.10	0.10
G040	39.40	0.37	3.10	0.10
G045	44.40	0.41	3.10	0.10
G050	49.40	0.45	3.10	0.10
G055	54.40	0.49	3.10	0.10
G060	59.40	0.53	3.10	0.10
G065	64.40	0.57	3.10	0.10
G070	69.40	0.61	3.10	0.10
G075	74.40	0.65	3.10	0.10
G080	79.40	0.69	3.10	0.10
G085	84.40	0.73	3.10	0.10
G090	89.40	0.77	3.10	0.10
G095	94.40	0.81	3.10	0.10
G100	99.40	0.85	3.10	0.10
G105	104.40	0.87	3.10	0.10
G110	109.40	0.91	3.10	0.10

Size	Actual Size (mm)			
	I.D.	±	W	±
G115	114.40	0.94	3.10	0.10
G120	119.40	0.98	3.10	0.10
G125	124.40	0.10	3.10	0.10
G130	129.40	0.11	3.10	0.10
G135	134.40	0.11	3.10	0.10
G140	139.40	0.11	3.10	0.15
G145	144.40	0.12	3.10	0.15
G150	149.30	0.12	5.70	0.13
G155	154.30	0.12	5.70	0.13
G160	159.30	0.13	5.70	0.13
G165	164.30	0.13	5.70	0.13
G170	169.30	0.13	5.70	0.13
G175	174.30	0.14	5.70	0.13
G180	179.30	0.14	5.70	0.13
G185	184.30	0.14	5.70	0.13
G190	189.30	0.15	5.70	0.13
G195	194.30	0.15	5.70	0.13
G200	199.30	0.16	5.70	0.13

Size	Actual Size (mm)			
	I.D.	±	W	±
G210	209.30	0.16	5.70	0.13
G220	219.30	0.17	5.70	0.13
G230	229.30	0.17	5.70	0.13
G240	239.30	0.18	5.70	0.13
G250	249.30	0.19	5.70	0.13
G260	259.30	0.19	5.70	0.13
G270	269.30	0.20	5.70	0.13
G280	279.30	0.21	5.70	0.13
G290	289.30	0.21	5.70	0.13
G300	299.30	0.22	5.70	0.13

Static Seals

MAE

TRIADA
TECHNOLOGIES

#Sealing**Excellence**


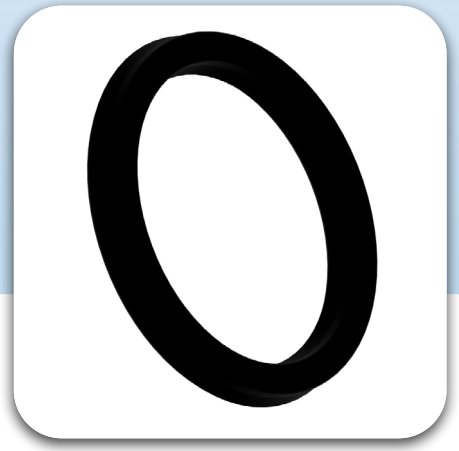

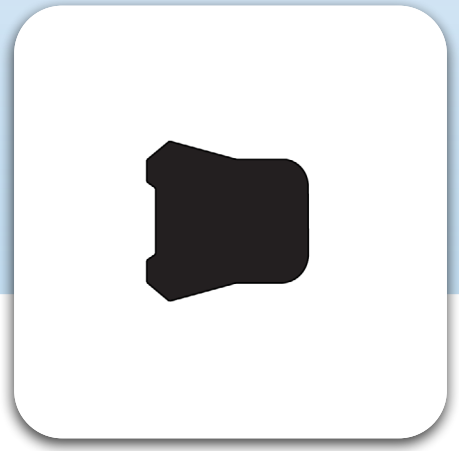

Description

MAE Flange seal is a significant development in all static applications where a normal NBR O-ring would not resist to high pressure and coupling clearance. The specific profile and the high modulus of elasticity, together with an excellent compression set, avoid extrusion and leakage problems in the tube flanging.

Diameter Range	Ø18.00 – Ø63-80
Standard material	TRIATHANE® T479(PU)
Temperature(°C)	-35° C to 110° C
Fluids	Hydraulic fluids (Mineral Oil based).
Pressure	< 400 bar (Please consult Triada® Technologies for applications above 400bar)

Material Details

Seal Material	Seal Material Code
TRIATHANE® Poly-Urethane	T479

Nomenclature

Part No	MAE	02540	0394	0279	T479
	Seal profile	Groove OD x 10	Groove Width x 10	Groove Depth x 10	Seal Material Code

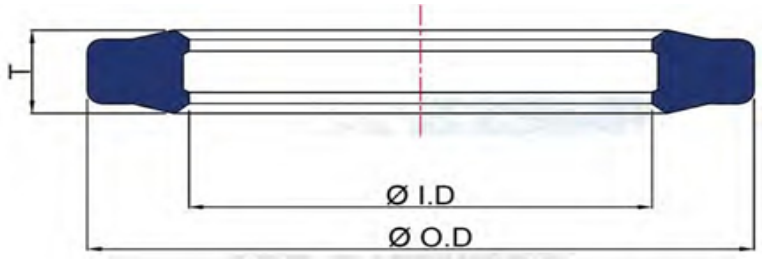

Seal Dimensions

Nominal Flange Size	O.D	I.D	Thickness "T"
1/2"	25.60	18.00	3.50
3/4"	31.80	24.20	3.50
1"	39.80	32.20	3.50
1 1/4"	44.80	37.20	3.50
1 1/2"	54.30	46.70	3.50
2"	63.80	56.20	3.50

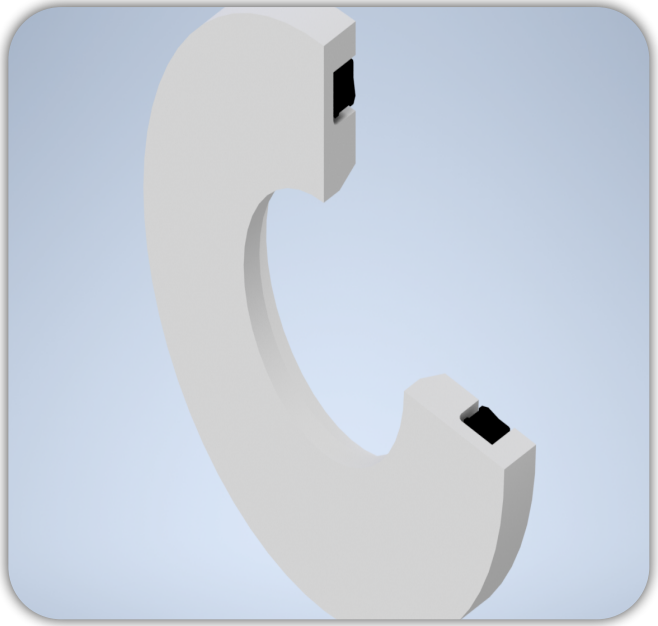

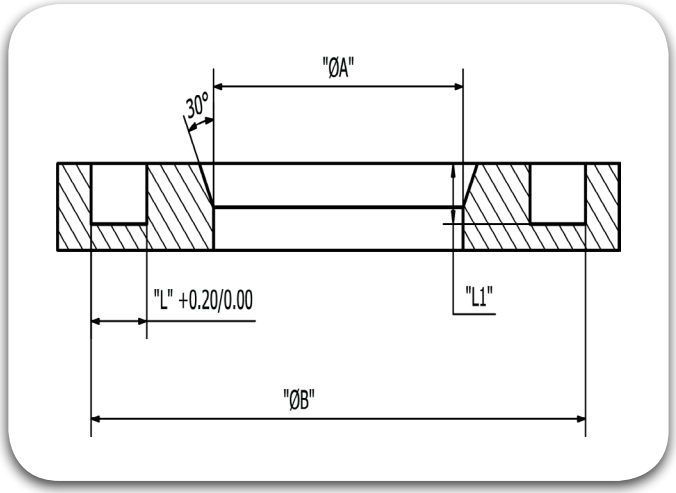

Groove Dimensions						
Sl. No.	Nominal Flange Size	"ØA"	"ØB" min. - max.	Width "L" min. - max	Depth "L1" min. - max	TRIADA® Part Numbers
1	1/2"	13	25.40 - 25.83	3.94 - 4.45	2.79 - 2.92	MAE02540 0394 0279 T479
2	3/4"	19	31.75 - 31.88	3.94 - 4.45	2.79 - 2.92	MAE03175 0394 0279 T479
3	1"	25	39.62 - 39.75	3.94 - 4.45	2.79 - 2.92	MAE03962 0394 0279 T479
4	1 1/4"	32	44.45 - 44.58	3.94 - 4.45	2.79 - 2.92	MAE04445 0394 0279 T479
5	1 1/2"	38	53.72 - 53.98	3.94 - 4.45	2.79 - 2.92	MAE05372 0394 0279 T479
6	2"	51	63.25 - 62.50	3.94 - 4.45	2.79 - 2.92	MAE06325 0394 0279 T479

Static Seals

Back-Up Rings

TRIADA
TECHNOLOGIES

#SealingExcellence






Description

Back-up rings are always used in conjunction with O-Rings or Quad Rings. When subjected to pressure, the O-Ring can be forced into the sealed gap and thus extrudes & destroyed. Back-up rings are fitted in order to restrict the size of the gap and thereby prevent the O-Ring from extruding into it. The use of a back-up ring produces a reliable O-Ring seal effective over a wide pressure and temperature range. The same applies to Quad-Rings which can also be fitted together with back-up rings.

Types of Back-up Rings

Back-up rings are used for external seals (e.g. pistons) and internal seals (e.g. rods and shafts). They are used preferably for radial-dynamic and radial-static installation, please contact TRIADA® for Back-up rings for axial-static installation.

There are five standard versions:

- BSU Type (Spiral)
- BUC Type (Cut)
- BUU Type (Uncut)
- BCC Type (Concave Cut)
- BCU Type (Concave Uncut)



Back-up Ring Spiral

Spiral back-up ring

Spiral back-up rings are used for dynamic (reciprocating motion) and static seals. They are particularly recommended if there are substantial fluctuations in temperature, because they contract or expand helically. The designs are also suitable for diameters that do not conform to standard, because the ring can easily be shortened and made to fit the application at hand



Back-up Ring Cut

Cut back-up ring

Cut back-up rings are intended for dynamic (reciprocating motion) and static seals. They must be split by noncutting techniques in order to ensure that another gap is not formed when they are mounted. As a rule, a cut is oblique, but rings with straight cuts can also be supplied.

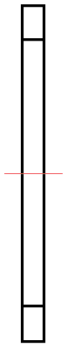

Back-up Ring
Uncut

Uncut back-up ring

Uncut back-up rings are used for dynamic O-Ring seals (reciprocal, swiveling, helical motion and rotary motion) and for static O-Ring seals. Thanks to a special installation principle, the so-called rotary principle, O-Rings and Quad-Rings can be used for sealing rotating shafts at high speeds and high pressures. Only uncut back-up rings may be used for rotary installations.



Back-up Ring
Concave Cut

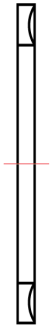

Back-up Ring
Concave Uncut

Concave back-up rings

Back-up rings which are concave on one side have a larger contact surface for the O-Ring than the standard versions with rectangular cross-section. The O-Ring is partitioned substantially better and can thus also be subject to a higher load.

Essential advantages:

- The O-Ring shape is largely retained thanks to the concave contact surface, even at every high and pulsating pressure.
- The dimensional stability of the O-Ring has a favorable influence on the sealing force as a function of time (relaxation behavior).
- The O-Ring seal has a longer service life.

Concave back-up rings are used for various pressure ranges, dependent upon the material:

- Highly wear-resistant nitrile rubber (NBR 90 Shore A) and (polyester rubber). Back-up rings made of these elastomers are only available uncut.

Operating conditions

The fitting of back-up rings are essential if a least one of the following conditions of operation apply:

- Pressures of about 80 bar upwards (under certain circumstances lower pressures as well).
- Wide tolerances for the dimensions of the gap between the parts to be sealed and for the diameter and large radial gaps
- High speeds and frequencies
- Strong pressures surges and fluctuations
- High temperatures and fluctuating temperatures

If pressure acts on one side of the O-Ring, it will suffice to one back-up ring on the side not exposed to the pressure. If the pressure changes, two back-up rings – one on each side of the O-Ring – must be fitted as shown below.

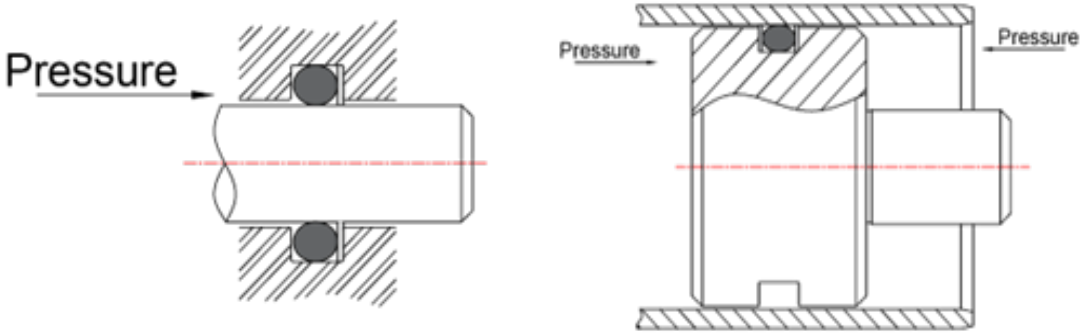

In order to avoid errors in assembly, it is advisable to fit two back-up rings, even if the pressure acts on only one side.

Materials

The back-up rings are normally made of virgin PTFE. Owing to the unfavorable cold flow behavior of PTFE (permanent deformation as a function of the load and temperature), this material can be used only for moderate pressures. PTFE modified with filters, e.g. glass fiber, bronze and carbon etc. is used for more stringent requirements. This improves the mechanical properties and primarily resistance to cold flow, compressive strength, abrasion resistance and temperature dependence. Back-up rings may also be made of elastomeric materials, preferably nitrile rubber (NBR) and Hytrel (polyester rubber) with a high shore hardness.

Selection of back-up rings

In order to ensure the selection of the correct back-up ring, the size of the O-Ring and the operating conditions involved must be accurately known.

- Dimensions of the back-up ring

Once it is known whether a seal is required “for a bore or a rod”, and once the dimensions of the groove have been derived from those of the O-Ring, the dimensions of the back-up ring can be accurately determined.

- Design of the back-up ring

An idea of the type of back-up ring required, i.e. spiral, cut or uncut ring, can be derived from the operating conditions (e.g. whether a dynamic or static seal is needed and whether the motion is reciprocating, oscillating, spiral or rotary).

- Materials suitable for the back-up ring

Important criteria in selecting the correct back-up ring material are operating pressure, temperature and the size of the diametrical clearance or radial sealing gap.

The greater the diametrical clearance or the radial sealing gap, the greater the compressive strength of the back-up ring must be. The greater the diametrical clearance or the radial sealing gap, the greater the compressive strength of the back-up ring must be.

Base Material	Material Code	Dynamic Application Pressure in Bar
NBR 90 Shores A	T591	200
FKM 90 Shores A	T691	200
Bronze filled PTFE	T415	400
Carbon Filled PTFE	T417	400
Glass Filled PTFE	T412	400
Virgin PTFE -Standard	T401	250

Nomenclature

Part No	BXX	XXXX	XXXX	XXXX	T401
	Seal profile	Bore / Rod Dia. x 100	Groove Dia x 100	Seal Width x 100	Seal Material Code

Back - up Ring Type	Seal Profile
Spiral Back - up Ring	BSU
Back - up Ring (Uncut)	BUU
Back - up Ring (Cut)	BUC
Concave Back - up Ring (Uncut)	BCU
Concave Back - up Ring (Cut)	BCC

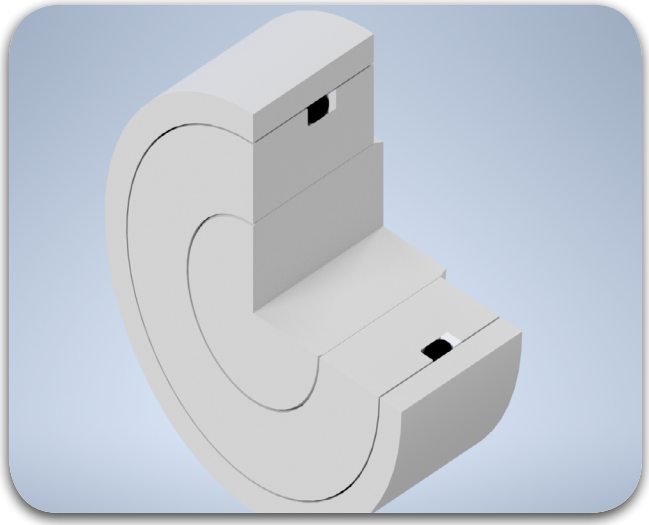

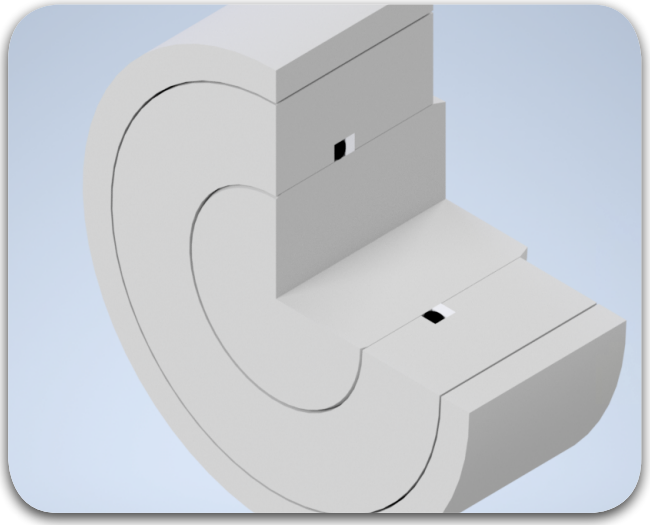

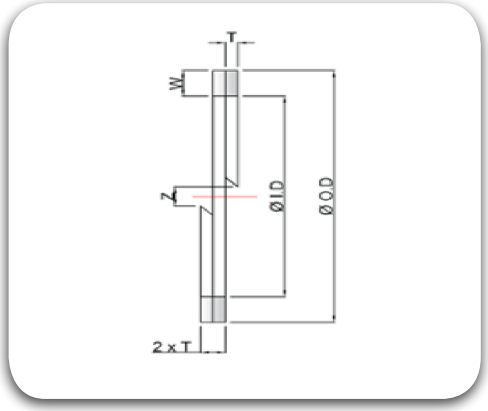

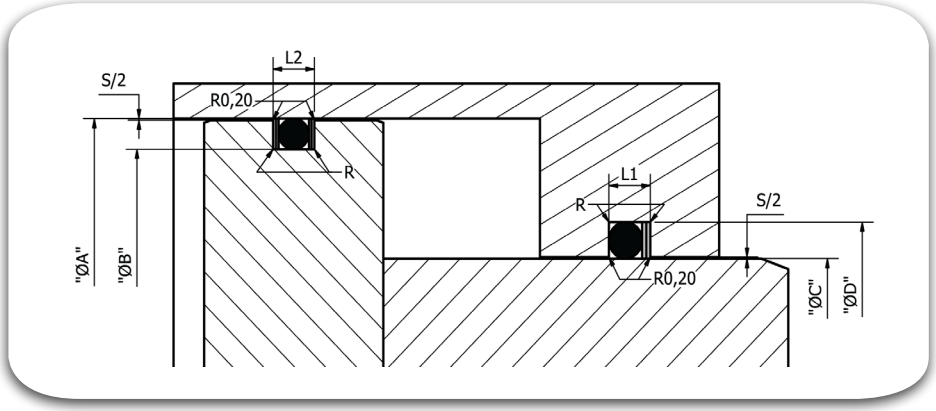

Sl No	O-Ring cross Section	Back-Up Ring Dimensions		Groove Dimensions				
				Groove Dia.		Groove Width		Radius R
	AS 568 A	Width "W"	Thickness "T"	"ØB" -0.10	"ØD" +0.10	1 Back- Up Ring "L1" +0.20	2 Back- up Rings "L2" +0.20	
1	1.78	1.20	0.50	A - 2.4	C + 2.4	2.90	3.90	0.20
2		1.30	0.50	A - 2.6	C + 2.6	3.00	4.00	0.20
3		1.45	0.70	A - 2.9	C + 2.9	3.60	5.00	0.20
4		1.65	0.70	A - 3.3	C + 3.3	3.90	5.30	0.20
5		2.00	0.70	A - 4.0	C + 4.0	4.30	5.70	0.30
6		2.10	0.70	A - 4.2	C + 4.2	4.40	5.80	0.30
7	2.62	2.25	0.70	A - 4.5	C + 4.5	4.50	5.90	0.30
8		2.50	0.70	A - 5.0	C + 5.0	5.00	6.40	0.30
9	3.53	3.10	0.70	A - 6.2	C + 6.2	5.60	7.00	0.40
10		3.50	0.85	A - 7.0	C + 7.0	6.40	8.10	0.40
11		4.30	0.85	A - 8.6	C + 8.6	7.70	9.40	0.40
12	5.33	4.70	0.85	A - 9.4	C + 9.4	7.90	9.60	0.60
13		5.00	0.85	A - 10.0	C + 10.0	8.40	10.10	0.60
14		5.30	0.85	A - 10.6	C + 10.6	8.60	10.30	0.60
15	7.00	6.10	1.25	A - 12.2	C + 12.2	10.70	13.20	0.60
16		7.00	1.25	A - 14.0	C + 14.0	11.80	14.30	0.60
17		7.50	1.25	A - 15.0	C + 15.0	12.20	14.70	0.60

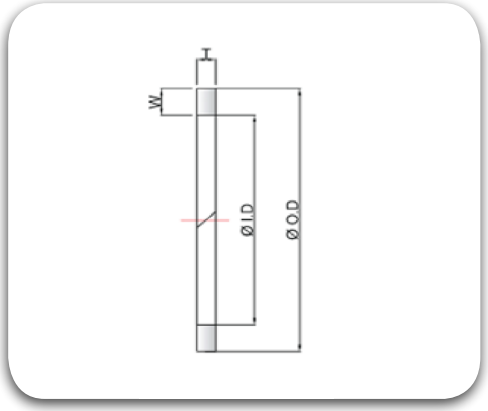

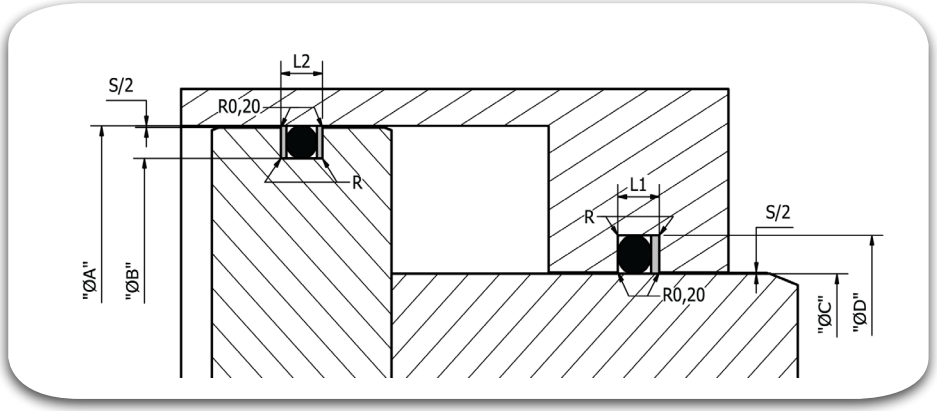

Sl No	O-Ring cross Section	Back-Up Ring Dimensions		Groove Dimensions				
				Groove Dia.		Groove Width		Radius R
	AS 568 A	Width "W"	Thickness "T"	"ØB" -0.10	"ØD" +0.10	1 Back- Up Ring "L1" +0.20	2 Back- up Rings "L2" +0.20	
1	1.78	1.20	1.00	A - 2.4	C + 2.4	2.90	3.90	0.20
2		1.30	1.00	A - 2.6	C + 2.6	3.00	4.00	0.20
3		1.45	1.40	A - 2.9	C + 2.9	3.60	5.00	0.20
4		1.65	1.40	A - 3.3	C + 3.3	3.90	5.30	0.20
5		2.00	1.40	A - 4.0	C + 4.0	4.30	5.70	0.30
6		2.10	1.40	A - 4.2	C + 4.2	4.40	5.80	0.30
7	2.62	2.25	1.40	A - 4.5	C + 4.5	4.50	5.90	0.30
8		2.50	1.40	A - 5.0	C + 5.0	5.00	6.40	0.30
9	3.53	3.10	1.40	A - 6.2	C + 6.2	5.60	7.00	0.40
10		3.50	1.70	A - 7.0	C + 7.0	6.40	8.10	0.40
11		4.30	1.70	A - 8.6	C + 8.6	7.70	9.40	0.40
12	5.33	4.70	1.70	A - 9.4	C + 9.4	7.90	9.60	0.60
13		5.00	1.70	A - 10.0	C + 10.0	8.40	10.10	0.60
14		5.30	1.70	A - 10.6	C + 10.6	8.60	10.30	0.60
15	7.00	6.10	2.50	A - 12.2	C + 12.2	10.70	13.20	0.60
16		7.00	2.50	A - 14.0	C + 14.0	11.80	14.30	0.60
17		7.50	2.50	A - 15.0	C + 15.0	12.20	14.70	0.60

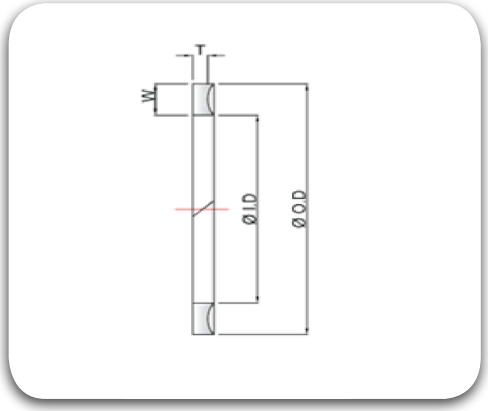

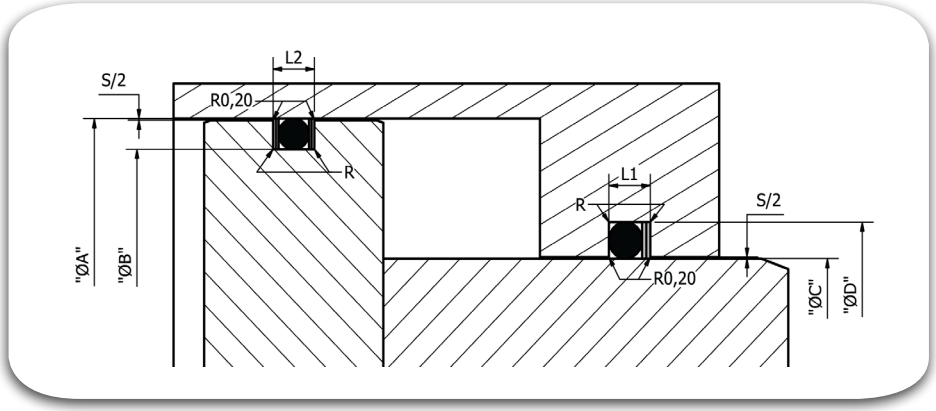

Sr No	O-Ring cross Section	Back-Up Ring Dimensions		Groove Dimensions				
				Groove Dia.		Groove Width		Radius R
	AS 568 A	Width "W"	Thickness "T"	"ØB" -0.10	"ØD" +0.10	1 Back- Up Ring "L1" +0.20	2 Back- up Rings "L2" +0.20	
1	1.78	1.20	1.00	A - 2.4	C + 2.4	2.90	3.90	0.20
2		1.30	1.00	A - 2.6	C + 2.6	3.00	4.00	0.20
3		1.45	1.40	A - 2.9	C + 2.9	3.60	5.00	0.20
4		1.65	1.40	A - 3.3	C + 3.3	3.90	5.30	0.20
5		2.00	1.40	A - 4.0	C + 4.0	4.30	5.70	0.30
6		2.10	1.40	A - 4.2	C + 4.2	4.40	5.80	0.30
7	2.62	2.25	1.40	A - 4.5	C + 4.5	4.50	5.90	0.30
8		2.50	1.40	A - 5.0	C + 5.0	5.00	6.40	0.30
9	3.53	3.10	1.40	A - 6.2	C + 6.2	5.60	7.00	0.40
10		3.50	1.70	A - 7.0	C + 7.0	6.40	8.10	0.40
11		4.30	1.70	A - 8.6	C + 8.6	7.70	9.40	0.40
12	5.33	4.70	1.70	A - 9.4	C + 9.4	7.90	9.60	0.60
13		5.00	1.70	A - 10.0	C + 10.0	8.40	10.10	0.60
14		5.30	1.70	A - 10.6	C + 10.6	8.60	10.30	0.60
15	7.00	6.10	2.50	A - 12.2	C + 12.2	10.70	13.20	0.60
16		7.00	2.50	A - 14.0	C + 14.0	11.80	14.30	0.60
17		7.50	2.50	A - 15.0	C + 15.0	12.20	14.70	0.60

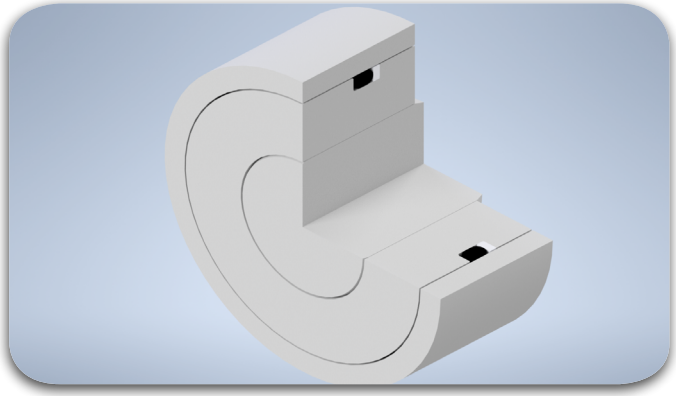

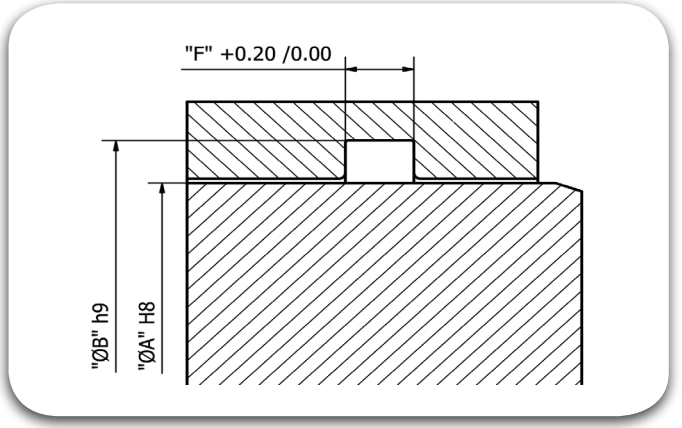

Sl No.	Shaft Dia. "ØA"	Groove Dimensions for Uncut Backup Rings (BUU)		TRIADA® Part Numbers	O-Ring dash Number
		Groove Dia. "ØB" +0.1	Groove Width F +0.2		
1	5.00	8.30	3.20	BUU00500 00830 0320 T401	9
2	8.00	11.40	3.20	BUU00800 01140 0320 T401	904
3	10.00	14.90	4.00	BUU01000 01490 0400 T401	111
4	12.00	16.90	4.00	BUU01200 01690 0400 T401	112
5	15.00	19.90	4.00	BUU01500 01990 0400 T401	114
6	16.00	20.90	4.00	BUU01600 02090 0400 T401	115
7	18.00	22.90	4.00	BUU01800 02290 0400 T401	116
8	20.00	26.70	5.40	BUU02000 02670 0540 T401	212
9	22.00	28.70	5.40	BUU02200 02870 0540 T401	213
10	24.00	30.70	5.40	BUU02400 03070 0540 T401	214
11	25.00	31.70	5.40	BUU02500 03170 0540 T401	215
12	27.00	33.70	5.40	BUU02700 03370 0540 T401	216
13	28.00	34.70	5.40	BUU02800 03470 0540 T401	217
14	30.00	36.70	5.40	BUU03000 03670 0540 T401	218
15	32.00	38.70	5.40	BUU03200 03870 0540 T401	219
16	33.00	39.70	5.40	BUU03000 03970 0540 T401	220
17	34.00	40.70	5.40	BUU03400 04070 0540 T401	221

Sl No.	Shaft Dia. "ØA"	Groove Dimensions for Uncut Backup Rings (BUU)		TRIADA® Part Numbers	O-Ring dash Number
		Groove Dia. "ØB" +0.1	Groove Width F +0.2		
19	38.00	47.90	8.00	BUU03800 04790 0800 T401	326
20	40.00	50.00	8.00	BUU04000 05000 0800 T401	327
21	42.00	51.90	8.00	BUU04200 05190 0800 T401	327
22	45.00	54.90	8.00	BUU04500 05490 0800 T401	328
23	48.00	57.90	8.00	BUU04800 05790 0800 T401	329
24	50.00	59.90	8.00	BUU05000 05990 0800 T401	330
25	51.00	60.90	8.00	BUU05100 06090 0800 T401	330
26	52.00	61.90	8.00	BUU05200 06190 0800 T401	330
27	54.00	63.90	8.00	BUU05400 06390 0800 T401	331
28	55.00	64.90	8.00	BUU05500 06490 0800 T401	331
29	56.00	65.90	8.00	BUU05600 06590 0800 T401	332
30	60.00	69.90	8.00	BUU06000 06990 0800 T401	333
31	63.00	72.90	8.00	BUU06300 07290 0800 T401	334
32	65.00	74.90	8.00	BUU06500 07490 0800 T401	334
33	66.00	75.90	8.00	BUU06600 07590 0800 T401	335
34	67.00	76.90	8.00	BUU06700 07690 0800 T401	335
35	70.00	79.90	8.00	BUU07000 07990 0800 T401	336

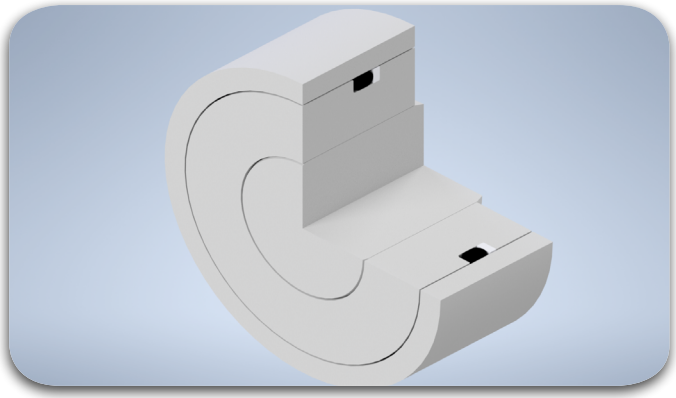

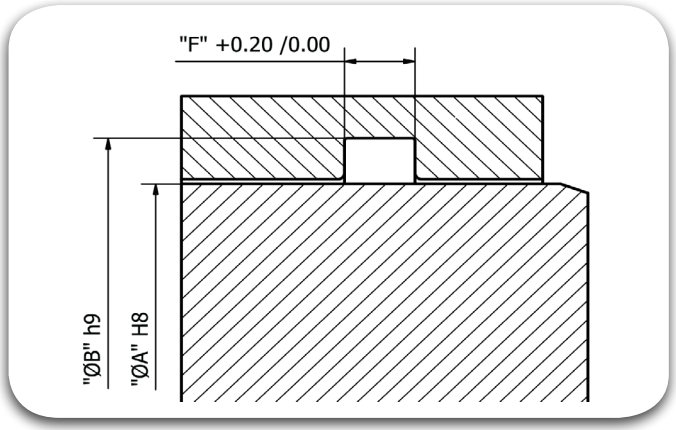

Sl No.	Shaft Dia. "ØA"	Groove Dimensions for Uncut Backup Rings (BUU)		TRIADA® Part Numbers	O-Ring dash Number
		Groove Dia. "ØB" +0.1	Groove Width F +0.2		
37	75.00	84.90	8.00	BUU07500 08490 0800 T401	338
38	80.00	89.90	8.00	BUU08000 08990 0800 T401	340
39	82.00	91.90	8.00	BUU08200 09190 0800 T401	340
40	85.00	94.90	8.00	BUU08500 09490 0800 T401	341
41	90.00	99.90	8.00	BUU09000 09990 0800 T401	343
42	95.00	104.90	8.00	BUU09500 10490 0800 T401	344
43	100.00	109.90	8.00	BUU10000 10990 0800 T401	346
44	105.00	114.90	8.00	BUU10500 11490 0800 T401	348
45	110.00	123.30	10.20	BUU11000 12330 1020 T401	426
46	115.00	128.30	10.20	BUU11500 12830 1020 T401	427
47	120.00	133.30	10.20	BUU12000 13330 1020 T401	429
48	122.00	135.30	10.20	BUU12200 13530 1020 T401	429
49	125.00	138.30	10.20	BUU12500 13830 1020 T401	430
50	130.00	143.30	10.20	BUU13000 14330 1020 T401	432
51	140.00	153.30	10.20	BUU14000 15330 1020 T401	436

Sl No.	Shaft Dia. "ØA"	Groove Dimensions for Uncut Backup Rings (BUU)		TRIADA® Part Numbers	O-Ring dash Number
		Groove Dia. "ØB" +0.1	Groove Width F +0.2		
53	160.00	173.30	10.20	BUU16000 17330 1020 T401	439
54	170.00	183.30	10.20	BUU17000 18330 1020 T401	441
55	180.00	193.30	10.20	BUU18000 19330 1020 T401	443
56	200.00	213.30	10.20	BUU20000 21330 1020 T401	445
57	210.00	223.30	10.20	BUU21000 22330 1020 T401	446
58	220.00	233.30	10.20	BUU22000 23330 1020 T401	447

Static Seals

Bonded Seal

TRIADA
TECHNOLOGIES

#SealingExcellence




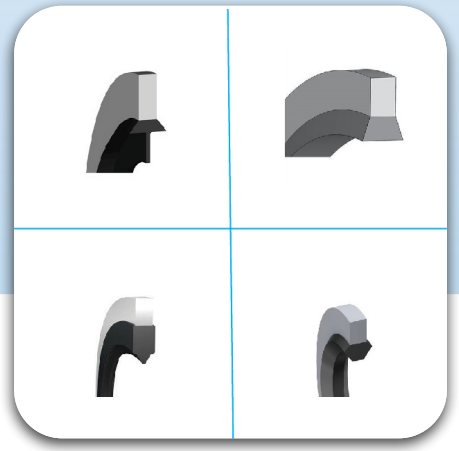

Description

The Bonded Seal comprises a metal washer and an elastomeric ring bonded inside the diameter. The metal washer prevents over-compression and limits deformation of the elastomeric ring.

Diameter Range	Ø3.00 – Ø250.00
Standard materials	Elastomer component is available in T571 (NBR 70) standard and also special order materials T591 (NBR 90), T671 (FKM 70) & T675 (FKM 75 Shore A), T775 (EPDM 75 Shore A) Washer component is carbon steel (Zinc Plated Cr II thickness 5µ), or stainless steel (JISG 3141/ DIN EN 101030/DC01).
Temperature(°C)	From -32°C to 200°C (Based on Elastomer Material).
Pressure	< 2000 bar (Please consult Triada Technologies for max. pressure Applications).

Advantages:

- High and low temperature capabilities
- Bolt torque is reduced with no loss of tightening load
- Less expensive
- Easy installation
- Reusable
- Over compression nor the extrusion is possible because of the encased metal

Material Details

Elastomer Material	Material / Code	Seal Ring Material	Seal Material Code
TRIAFLEX® NBR 70	T571	Carbon Steel	C
TRIAFLEX® NBR 90	T591		
TRIAFLEX® EPDM 70	T775	Stainless Steel	S
TRIAFLEX® FKM 70	T675		

Types of Bonded seals:

- **NBS1** is used for flat flanges or with recessed bolt holes and also used in tapped holes the fig below represents the NBS1 type of bonded seal

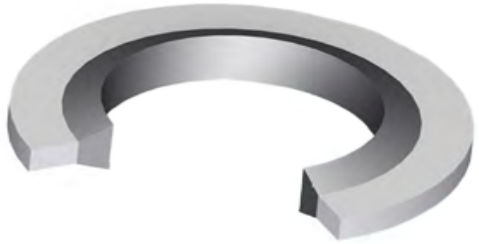

- **NBS2** is self-centered Bonded seal, It is located concentrically, it can be pre-assembled and also positively retained, the fig below represents the NBS2 type of bonded seal.

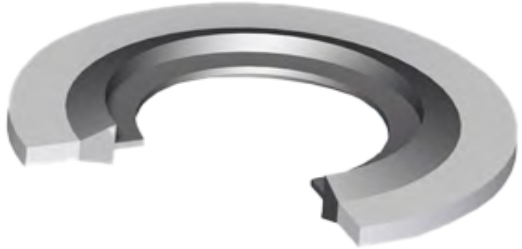

Types of Bonded seals:

- **NBS3** is used for good sealing with a low tightening moment, mostly used with the hexagonal heads, the design of this seal is in such a way that no need of countersink to centre the seal, the fig below represents the NBS3 type of bonded seal.



- **NBS4** seal prevents the leakage by sealing in the thread, this seal is specially designed with three contact lips of the rubber body which seals the thread to nut and machine component.



Torque Loading

Satisfactory performance of the seal depends on correct torque loading during assembly. The following table indicates recommended figures. For double sealing, additional torque is generally required.

Thread Size			Torque required	Double Sealing Factor
Metric	Bolt	BSP+	Nm	
Upto 8	5/16	-	5.30	0.25 - 0.15
10	3/8	1/8	7.10	
11	7/16	-	11.80	
12	1/2	1/4	15.80	0.30 - 0.20
14	9/16	-	22.60	
16	5/8	3/8	30.50	
18	3/4	-	40.70	
20	13/16	1/2	56.50	0.30 - 0.20
22	7/8	5/8	67.80	0.30 - 0.20
24	1.00	3/8	73.40	0.35 - 0.25
27+	1.10/16	-	79.00	

NBS1 Metric & Inch Dimension range:

For Metric threads:

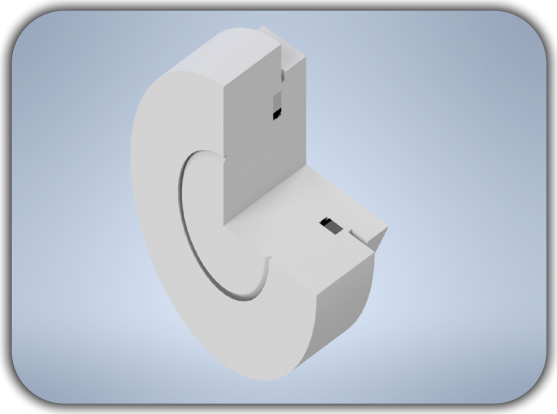

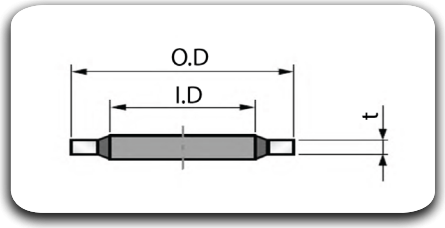

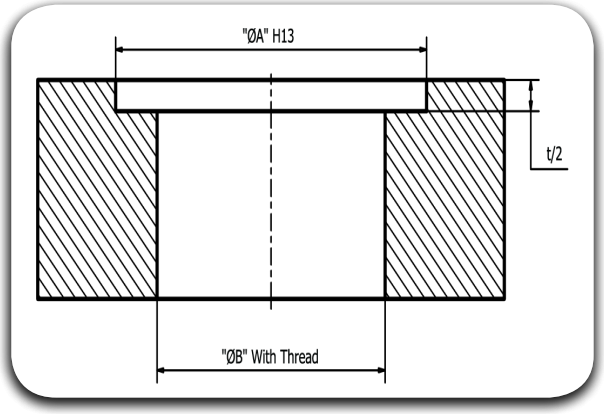

Metric Thread	Dimensions			Recessed bolt holes "ØA"	Bore "ØB"	TRIADA® Part Numbers
	I.D	O.D	Thickness "t"			
M2.5	3.10	6.40	1.00	6.70	2.70	NBS100310 00640 0100
M2.5	3.10	6.40	1.30	6.70	2.70	NBS100310 00640 0130
M3	3.60	7.50	1.00	7.63	3.20	NBS100360 00750 0100
M3	4.10	7.00	1.00	7.30	3.20	NBS100410 00700 0100
M3(M3.5)	4.10	7.20	1.00	7.50	3.20	NBS100410 00720 0100
M4	4.50	7.00	1.00	7.35	4.20	NBS100450 00700 0100
M4	4.60	9.00	1.00	9.30	4.30	NBS100460 00900 0100
M4	4.90	8.60	1.00	8.90	4.30	NBS100490 00860 0100
M5	5.60	10.00	1.00	10.13	5.20	NBS100560 01000 0100
M5	5.70	9.00	1.00	9.30	5.30	NBS100570 00900 0100
M5	5.70	9.20	1.00	9.50	5.30	NBS100570 00920 0100
M5	5.70	9.20	1.00	9.50	5.30	NBS100570 00920 0100
M5	5.70	10.00	1.00	10.30	5.30	NBS100570 01000 0100
M5	6.20	9.20	1.00	9.50	5.30	NBS100620 00920 0100
M6	6.60	11.00	1.00	11.13	6.20	NBS100660 01100 0100

Metric Thread	Dimensions			Recessed bolt holes "ØA"	Bore "ØB"	TRIADA® Part Numbers
	I.D	O.D	Thickness "t"			
M6	6.70	11.00	1.00	11.30	6.40	NBS100670 01100 0100
M6	6.70	11.00	2.50	11.35	6.40	NBS100670 01100 0250
M6	6.85	13.27	1.30	13.40	6.20	NBS106850 01327 0130
M6	6.90	13.20	1.30	13.50	6.40	NBS100690 01370 0130
M6	7.00	11.40	1.00	11.53	6.20	NBS100700 01140 0100
M6	7.00	13.40	1.30	13.70	6.40	NBS100700 01340 0130
M6	8.50	13.40	1.00	13.70	6.40	NBS100850 01340 0100
M8	8.70	14.00	1.00	14.30	8.40	NBS100870 01400 0100
M8	8.70	14.20	1.30	14.50	8.40	NBS100870 01420 0130
M8	8.70	16.00	1.00	16.30	8.40	NBS100870 01600 0100
M8	9.30	13.30	1.00	13.60	8.40	NBS100930 01330 0100
M10	10.35	16.00	2.00	16.17	9.95	NBS201035 01600 0200
M8(M10)	10.70	16.00	1.50	16.30	8.40	NBS101070 01600 0150
M10	10.70	17.00	1.50	17.13	10.20	NBS101070 01700 0150
M8(M10)	10.70	18.00	1.50	18.30	8.40	NBS101070 01800 0150

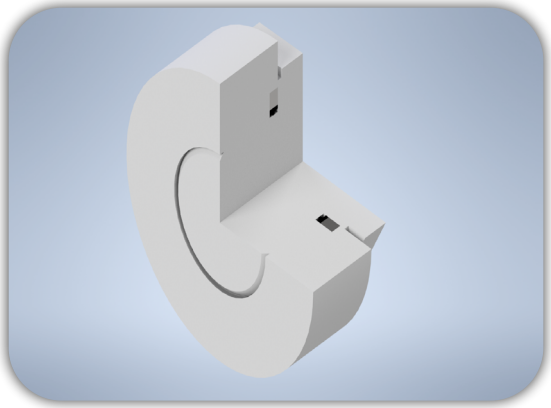

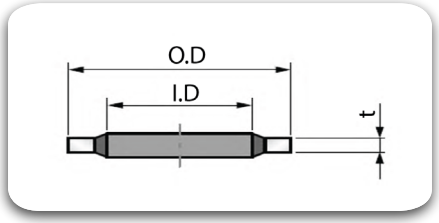

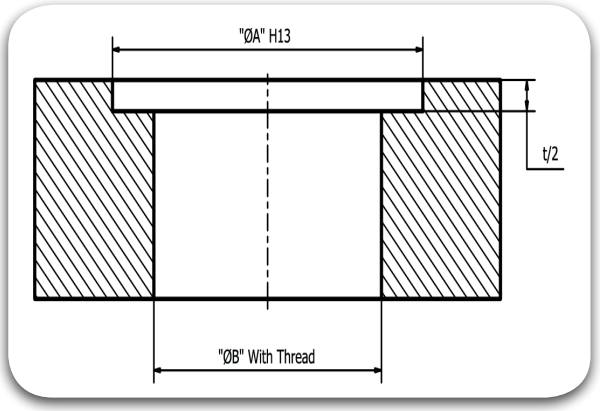

Metric Thread	Dimensions			Recessed bolt holes "ØA"	Bore "ØB"	TRIADA® Part Numbers
	I.D	O.D	Thickness "t"			
M11	11.8	18.1	1.5	18.23	11.2	NBS101180 01810 0150
M10(M11)	11.8	18.5	1.5	18.8	10.5	NBS101180 01850 0150
M10(M11)	11.8	19.1	1.5	19.4	10.5	NBS101180 01910 0150
M10(M12)	12.7	18	1.5	18.3	10.5	NBS101270 01800 0150
M12	12.7	19	1.5	19.13	12.2	NBS101270 01900 0150
M10(M12)	12.7	20	1.5	20.3	10.5	NBS101270 02000 0150
M12(M13)	13.7	20	1.5	20.3	13	NBS101370 02000 0150
M12	13.7	20.6	2.1	20.9	13	NBS101370 02060 0210
M12(M13)	13.7	22	1.5	22.3	13	NBS101370 02200 0150
M12	13.7	22.2	1.59	22.5	13	NBS101370 02220 0159
M13	13.8	20.1	1.5	20.23	13.2	NBS101380 02010 0150
M12(M13.5)	14	18.7	1.5	19	13	NBS101400 01870 0150
M12	14.9	22.3	2.1	22.6	13	NBS101490 02230 0210
M14(M15)	16	22.7	1.5	23	15	NBS101600 02270 0150
M14	16.5	25.5	2.1	25.8	15	NBS101650 02250 0210

Metric Thread	Dimensions			Recessed bolt holes "ØA"	Bore "ØB"	TRIADA® Part Numbers
	I.D	O.D	Thickness "t"			
M14(M16)	16.7	24	1.5	24.3	15	NBS101670 02400 0150
M16.5	17.2	23.9	2.1	24.03	16.7	NBS101720 02390 0210
M17	17.4	23.7	1.5	23.83	17.2	NBS101740 02370 0150
M14(M17)	17.4	24	1.5	24.3	15	NBS101740 02400 0150
M14	17.4	24	2	24.3	15	NBS101740 02400 0200
M16(M17.5)	18	24.7	1.5	25	17	NBS101800 02470 0150
M16	18.2	25.4	2.5	25.7	17	NBS101820 02540 0250
M16(M18)	18.7	26	1.5	26.3	17	NBS101870 02600 0150
M18	18.7	27	2	27.13	18.2	NBS101870 02700 0200
M18(M20)	20.7	28	1.5	28.3	19	NBS102070 02800 0150
M20	20.7	29	2	29.13	20.2	NBS102070 02900 0200
M18(M21)	21.5	28.7	2.5	29	19	NBS102150 02870 0250
M21	21.7	30	2	30.13	21.2	NBS102170 03000 0200
M20(M22)	22.5	28	1.5	28.3	21	NBS102250 02800 0150
M20(M22)	22.7	30	2	30.3	21	NBS102270 03000 0200

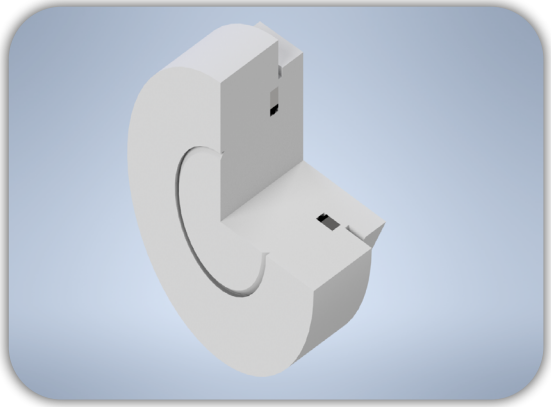

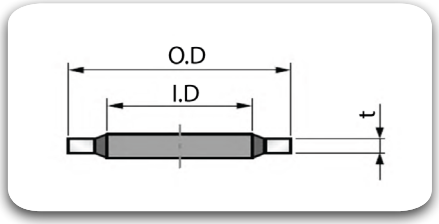

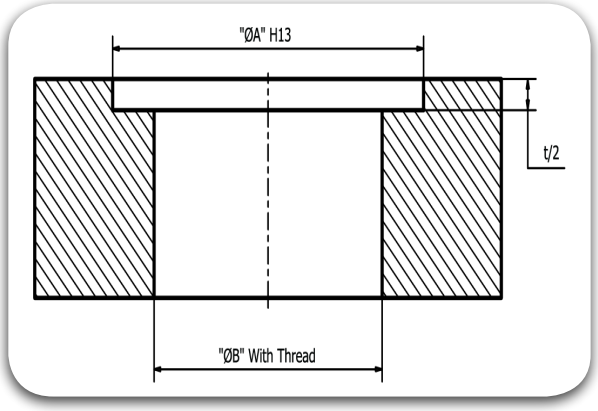

Metric Thread	Dimensions			Recessed bolt holes "ØA"	Bore "ØB"	TRIADA® Part Numbers
	I.D	O.D	Thickness "t"			
M22	22.70	31.00	2.00	31.13	22.20	NBS102270 03100 0200
M24	24.70	33.00	2.00	33.13	24.20	NBS102470 03300 0200
M22	26.70	35.00	2.00	35.30	23.00	NBS102670 03500 0200
M24	27.00	35.00	2.50	35.30	225.00	NBS102700 03500 0150
M26	27.00	35.30	2.00	35.43	26.20	NBS102700 03530 0200
M24(M27)	27.20	36.00	2.00	36.30	25.00	NBS102720 03600 0200
M27	27.70	36.00	2.00	36.13	27.20	NBS102770 03600 0200
M28	28.60	36.00	2.00	36.13	28.20	NBS102860 03600 0200
M24	28.70	37.00	2.00	37.30	25.00	NBS102870 03700 0200
M28.5	29.20	37.50	2.00	37.63	28.70	NBS102920 03750 0200
M30	30.70	39.00	2.00	39.13	30.20	NBS103070 03900 0200
M27(M30)	31.00	9.00	2.00	39.30	28.00	NBS103100 03900 0200
M27(M33)	33.70	42.00	2.00	42.30	28.00	NBS103370 04200 0200
M27	33.90	42.80	3.25	43.10	28.00	NBS103390 04280 0325
M27	33.90	42.90	3.40	43.20	28.00	NBS103390 04290 0340
M30(M33)	34.30	43.00	2.00	43.30	31.00	NBS103430 04300 0200
M30(M36)	36.70	46.00	2.00	46.30	31.00	NBS103670 04600 0200

Metric Thread	Dimensions			Recessed bolt holes "ØA"	Bore "ØB"	TRIADA® Part Numbers
	I.D	O.D	Thickness "t"			
M36(M39)	40.00	51.00	2.50	51.30	37.00	NBS104000 05100 0250
M39	40.00	51.00	2.50	51.13	39.20	NBS104000 05100 0250
M36(M42)	42.70	53.00	3.00	53.30	37.00	NBS104270 05300 0300
M42	43.00	54.00	2.50	54.13	42.20	NBS104300 05400 0250
M48	49.00	60.00	2.50	60.13	48.20	NBS104900 06000 0250
M42	51.70	63.50	3.25	63.80	43.00	NBS105170 06350 0325
M42(M51)	52.00	60.00	3.00	60.30	43.00	NBS105200 06000 0300
M48(M52)	53.30	64.50	3.00	64.80	50.00	NBS105330 06450 0300
M48(M60)	60.70	73.00	3.00	73.30	50.00	NBS106070 07300 0300
M68	68.60	79.50	3.50	79.65	68.20	NBS106860 07950 0350
M75	76.10	90.30	3.38	90.45	75.20	NBS107610 09030 0338
M64	76.10	90.30	3.40	90.60	66.00	NBS107610 09030 0340
M88	89.09	101.48	3.25	101.63	88.20	NBS108909 10148 0325
M125	127.00	143.67	5.00	143.82	125.20	NBS112700 14367 0500

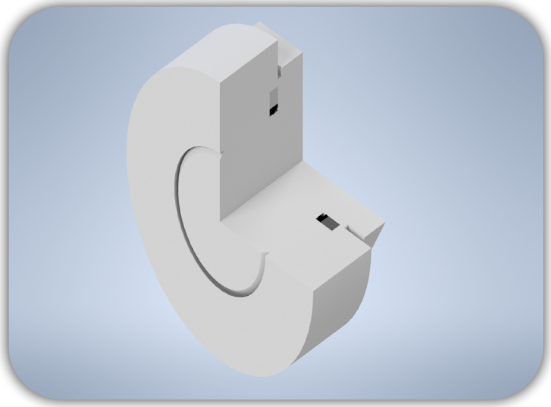

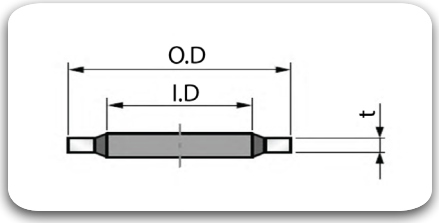

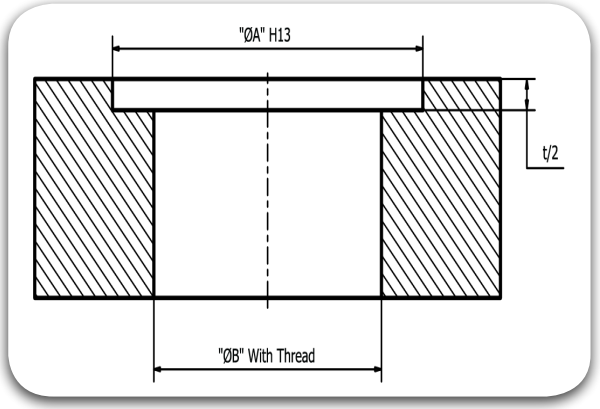

For Inch threads:

Thread dia. BSP	Dimensions			Recessed bolt holes "ØA"	Bore "ØB"	TRIADA® Part Numbers
	I.D 0.2	O.D 0.2	Thickness "t"			
6BA	3.05	6.35	1.22	6.48	2.79	NBS100305 00635 0122
1/8	3.70	8.05	1.04	8.30	3.50	NBS100370 00850 0104
9/64	4.00	8.38	1.04	8.70	3.90	NBS100400 00838 0104
4BA	4.12	7.26	1.22	7.39	3.60	NBS100412 00726 0122
5/32	4.70	9.29	1.04	9.60	4.50	NBS100470 00929 0104
2BA	5.21	8.38	1.22	8.51	4.69	NBS100521 00838 0122
3/16	5.60	1.79	1.37	11.10	5.40	NBS100560 01079 0137
7/32	6.20	11.55	1.37	11.90	6.00	NBS100620 01155 0137
1/ 4	6.99	13.34	1.22	13.47	6.35	NBS100699 01334 0122
1/ 4	7.10	13.18	1.37	13.50	7.00	NBS100710 01318 0137
5/16	8.31	13.34	1.22	13.47	7.93	NBS100831 01334 0122
5/16	8.64	14.22	1.22	14.35	7.94	NBS100864 01422 0122
5/16	8.70	15.16	1.37	15.50	8.50	NBS100870 01516 0137
3/8	10.30	17.52	1.37	17.80	10.20	NBS101030 01752 0137
3/8	10.37	15.88	2.00	16.01	9.53	NBS101037 01588 0200
40	11.26	18.36	2.00	18.49	10.16	NBS101126 01836 0200

Thread dia. BSP	Dimensions			Recessed bolt holes "ØA"	Bore "ØB"	TRIADA® Part Numbers
	I.D 0.2	O.D 0.2	Thickness "t"			
7/16	11.90	19.53	1.90	19.80	11.70	NBS101190 01953 0190
1/ 2	13.70	22.30	1.90	22.50	13.50	NBS101370 02230 0190
1/ 2	13.74	20.57	2.00	20.70	12.70	NBS101374 02057 0200
9/16	14.86	22.23	2.00	22.36	14.28	NBS101486 02223 0200
9/16	15.30	24.68	1.90	25.00	15.00	NBS101530 02468 0190
60	15.83	22.23	2.00	22.35	15.23	NBS101583 02223 0200
5/8	16.90	27.05	1.90	27.30	16.40	NBS11690 02705 0190
3/8	17.28	23.80	2.00	23.93	16.64	NBS101728 02380 0200
11/16	18.16	25.40	2.34	25.53	17.46	NBS101816 02540 0234
11/16	18.50	29.43	2.28	29.70	18.20	NBS101850 02493 0228
3/4	19.69	26.92	2.34	27.05	19.05	NBS101969 02692 0234
3/ 4	20.30	32.23	2.28	32.50	20.00	NBS102030 03223 0228
13/16	21.54	28.58	2.34	28.70	20.64	NBS102154 02858 0234
13/16	21.90	34.59	2.28	34.90	21.50	NBS102190 03459 0228
45145	23.49	31.75	2.34	31.88	22.23	NBS102349 03175 0234
15/16	24.26	33.27	2.34	33.40	23.80	NBS102426 03327 0234

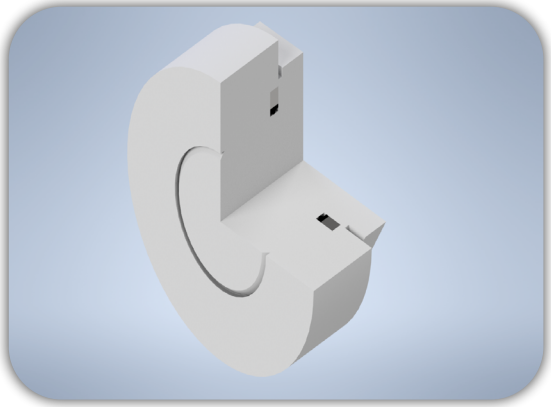

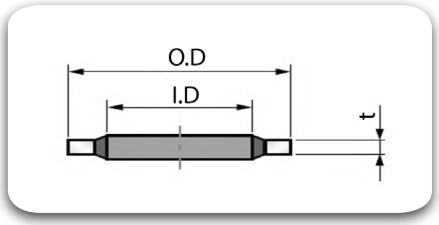

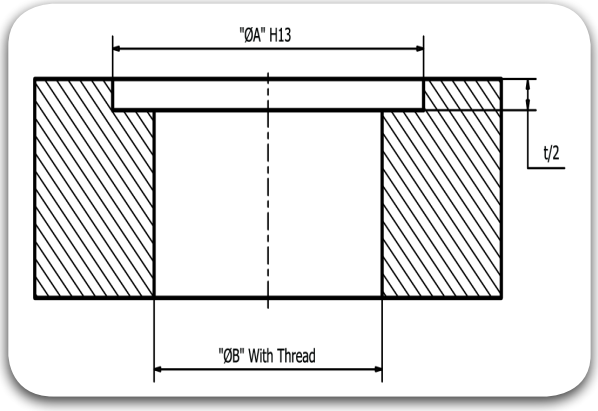

Thread dia. BSP	Dimensions			Recessed bolt holes "ØA"	Bore "ØB"	TRIADA® Part Numbers
	I.D 0.2	O.D 0.2	Thickness "t"			
1	26.70	42.13	2.28	42.40	26.50	NBS102670 04213 0228
1	27.05	34.93	2.34	35.06	25.41	NBS102705 03493 0234
1 1/16	27.82	38.61	2.34	38.74	27.00	NBS102782 03861 0234
1 1/8	29.33	36.58	2.34	36.71	28.57	NBS102933 03658 0234
1 1/8	29.80	46.91	2.28	47.30	29.50	NBS102980 04691 0228
1 3/16	30.81	38.10	2.34	38.23	30.15	NBS103081 03810 0234
1 ¼	32.64	41.40	3.25	41.53	31.74	NBS103264 04140 0325
1 1/4	33.00	51.28	3.40	51.40	32.80	NBS103300 05128 0340
1 5/16	33.89	42.80	2.34	42.93	33.33	NBS103389 04280 0234
1 5/16	33.89	42.80	3.25	42.93	33.33	NBS103389 04280 0325
1 3/8	35.94	44.45	3.25	44.58	34.92	NBS103594 04445 0325
1 ½	38.96	47.75	3.25	47.88	38.10	NBS103896 04775 0325
1 5/8	42.93	52.38	3.25	52.51	41.29	NBS104293 05238 0325
1 ¾	45.34	57.15	3.25	57.28	44.44	NBS104534 05715 0325
1 7/8	48.44	58.60	3.25	58.73	47.64	NBS104844 05860 0325

Thread dia. BSP	Dimensions			Recessed bolt holes "ØA"	Bore "ØB"	TRIADA® Part Numbers
	I.D 0.2	O.D 0.2	Thickness "t"			
2 1/8	54.89	69.85	3.25	69.98	53.99	NBS105489 06985 0325
2 ¼	58.04	70.36	3.25	70.49	57.14	NBS105804 07036 0325
2	60.58	73.03	3.25	73.16	59.62	NBS106058 07303 0325
2 ½	64.39	77.72	3.25	77.85	63.49	NBS106439 07772 0325
2 ¼	66.68	79.5	3.25	79.63	65.50	NBS106668 07950 0325
2 1/2	76.08	90.17	3.25	90.30	75.18	NBS107608 09017 0325

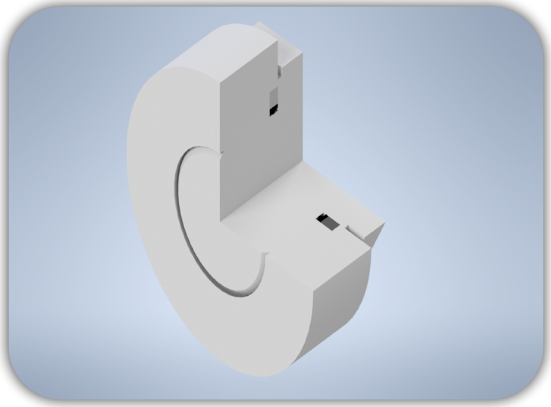

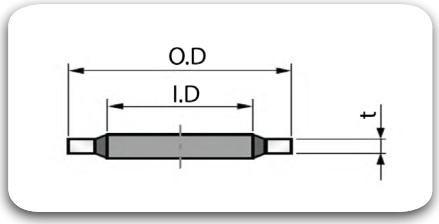

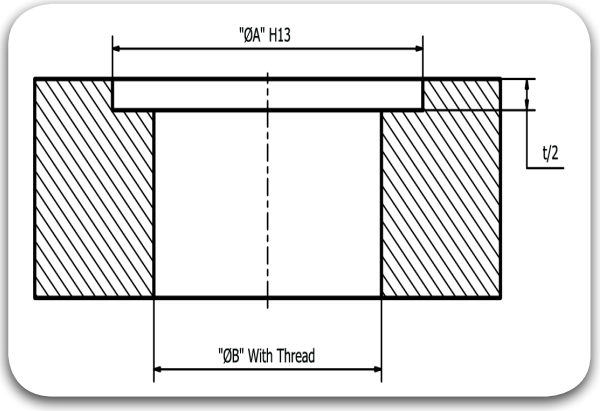

For BSP threads for Pipe connections & Couplings ISO 1179

Thread dia. BSP	Dimensions			Recessed bolt holes	TRIADA® Part Number
	I.D 0.2	O.D -0.2	Thickness "t"	"ØA"	
1/16	8.30	12.70	1.25	13.00	NBS100830 01270 0125
1/8	10.40	14.70	1.25	15.00	NBS101040 01470 0125
1/4	13.85	18.70	1.25	19.00	NBS101385 01870 0125
3/8	17.35	22.70	1.25	23.00	NBS101735 02270 0125
1/2	21.65	26.70	1.25	27.00	NBS102165 02670 0125
3/4	27.30	32.50	1.25	33.00	NBS102730 03250 0125
1	34.20	39.50	2.00	40.00	NBS103420 03950 0200
11/4	42.80	49.50	2.00	50.00	NBS104280 04950 0200
11/2	48.70	55.50	2.00	56.00	NBS104870 05550 0200
2	60.50	6.50	2.00	59.00	NBS106050 06850 0200

NBS2 Self Centering Metric & Inch Dimension range:

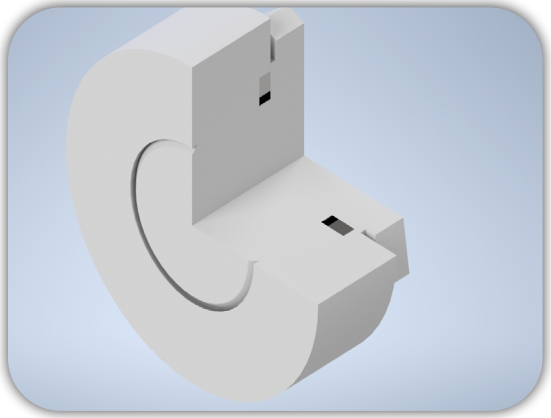

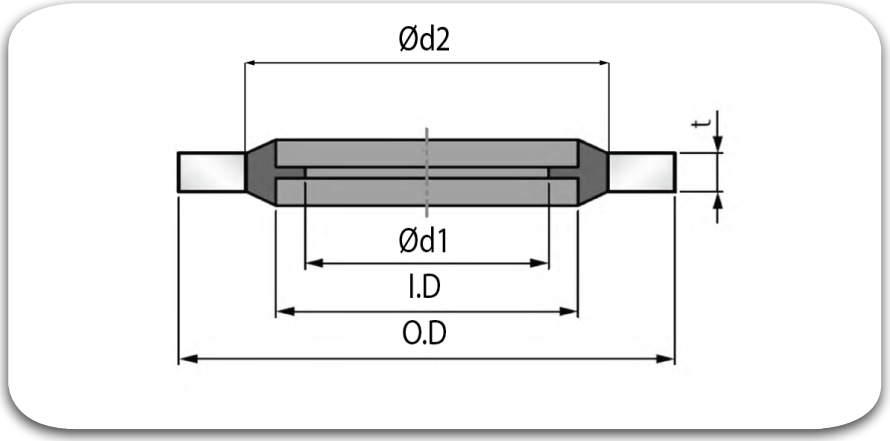

For Inch threads:

Inch Thread	Dimensions					TRIADA® Part Numbers
	O.D	Dia. " d2"	I.D	Dia. " d1"	Thickness "t"	
BSP 1/8	15.88	11.84	10.37	8.26	2.00	NBS201037 01588 0200
BSP 1/4	20.57	15.21	13.74	11.18	2.00	NBS201374 02057 0200
45143	25.40	18.75	16.51	12.90	2.00	NBS201651 02540 0200
BSP 3/8	23.80	18.75	17.28	14.76	2.00	NBS201728 02380 0200
42675	25.40	19.69	18.16	14.50	2.40	NBS201816 02540 0240
BSP 1/2	28.58	23.01	21.54	18.24	2.47	NBS202154 02858 0247
BSP 5/8	31.75	24.97	23.49	20.27	2.47	NBS202349 03175 0247
BSP 3/4	34.93	28.53	27.05	23.83	2.47	NBS202705 03493 0247
BSP 7/8	38.10	32.29	30.81	27.51	2.47	NBS203081 03810 0247
BSP 1	42.80	36.88	33.89	29.92	3.40	NBS203389 04280 0340
BSP 11/4	52.38	45.93	42.93	38.45	3.40	NBS204293 05238 0340
BSP 11/2	58.60	51.39	48.44	44.45	3.40	NBS204844 05860 0340
BSP 13/4	69.85	58.30	54.89	50.42	3.40	NBS205489 06985 0340
BSP 2	73.03	63.63	60.58	56.26	3.40	NBS206058 07303 0340
BSP 21/4	79.50	69.98	66.68	62.36	3.40	NBS206668 07950 0340
BSP 21/2	90.17	79.38	76.08	71.50	3.40	NBS207608 09017 0340

For Metric threads:

Metric Thread	Dimensions				Bore	TRIADA® Part Numbers
	I.D	Dia. " d2"	I.D	Dia. " d1"	Thickness "t"	
M6	10.00	8.00	6.70	5.60	1.00	NBS200670 01000 0100
M8	14.00	10.40	8.70	6.40	1.00	NBS200870 01400 0100
M10	16.00	12.40	10.70	8.05	1.50	NBS201070 01600 0150
M12	19.00	14.10	12.70	9.73	1.50	NBS201270 01900 0150
M14	22.00	16.40	14.70	11.38	1.50	NBS201470 02200 0150
M16	24.00	18.40	16.70	13.41	1.50	NBS201670 02400 0150
M18	26.00	20.40	18.70	14.76	1.50	NBS201870 02600 0150
M20	28.00	22.50	20.70	16.76	1.50	NBS202070 02800 0150
M22	30.00	24.40	22.70	18.74	2.00	NBS202270 03000 0150
M24	32.00	26.40	24.70	20.11	2.00	NBS202470 03200 0150

NBS3 Bonded Seal Metric Dimension range:

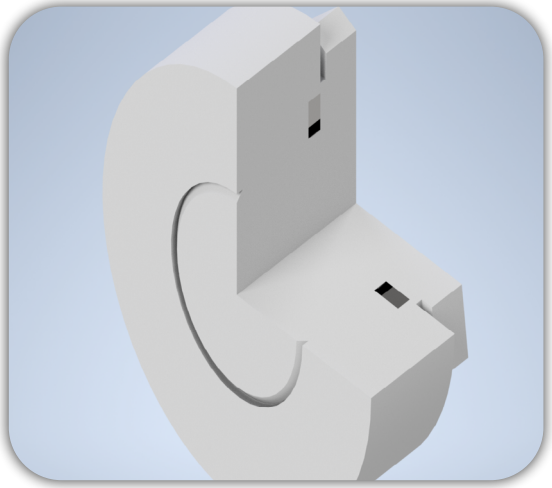

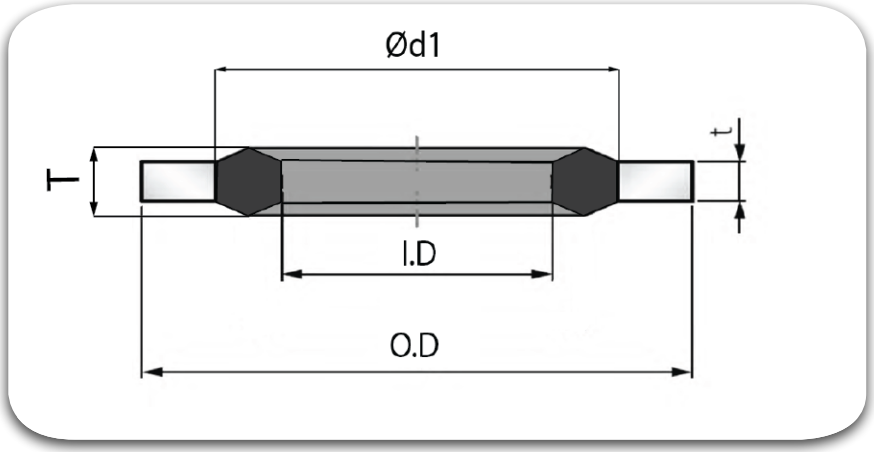

Metric Thread	Ø O.D	Tol. ±	Ø d1	Ø I.D	Tol. ±	Thick-ness "T"	Tol. ±	Thick-ness "t"	Tol. ±	Clearance Bore Max. Ø	TRIADA® Part Numbers
M3	5.90	0.20	4.50	3.00	0.20	1.40	0.20	1.00	0.15	3.60	NBS300300 00590 0100
M4	7.90	0.20	6.00	4.00	0.20	1.50	0.20	1.00	0.15	4.50	NBS300400 00790 0100
M5	8.90	0.20	6.40	5.00	0.20	1.50	0.20	1.00	0.15	5.50	NBS300500 00890 0100
M6	9.90	0.20	8.00	6.00	0.20	1.50	0.20	1.00	0.15	6.60	NBS300600 00990 0100
M8	13.90	0.20	11.00	8.00	0.20	2.00	0.20	1.00	0.15	9.00	NBS300800 01390 0100
M10	16.90	0.35	13.00	10.00	0.25	2.50	0.20	1.50	0.15	11.00	NBS301000 01690 0150
M12	18.90	0.35	16.00	12.00	0.25	2.50	0.20	1.50	0.15	14.00	NBS301200 01890 0150
M14	21.90	0.35	18.00	14.00	0.25	2.50	0.20	1.50	0.15	16.00	NBS301400 02190 0150
M16	23.90	0.35	20.00	16.00	0.25	2.50	0.20	1.50	0.15	18.00	NBS301600 02390 0150
M18	26.90	0.40	22.00	18.00	0.35	3.00	0.20	2.00	0.15	20.00	NBS301800 02690 0200
M20	29.90	0.40	25.00	20.00	0.35	3.00	0.20	2.00	0.15	22.00	NBS302000 02990 0200
M22	31.90	0.40	27.00	22.00	0.35	3.00	0.20	2.00	0.15	24.00	NBS302200 03190 0200
M24	35.90	0.40	29.00	24.00	0.35	3.00	0.20	2.00	0.15	26.00	NBS302400 03590 0200

NBS4 Bonded Seal Metric Dimension range:

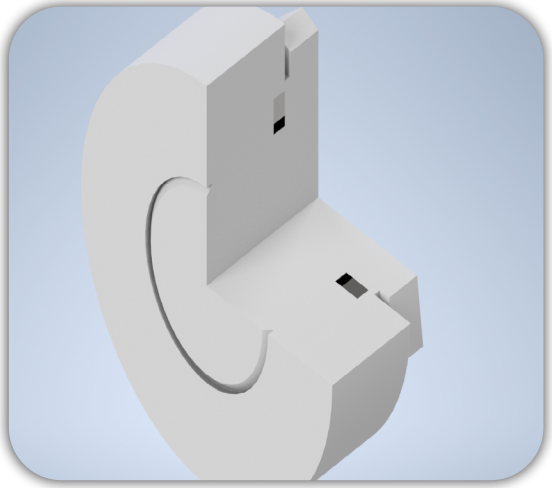

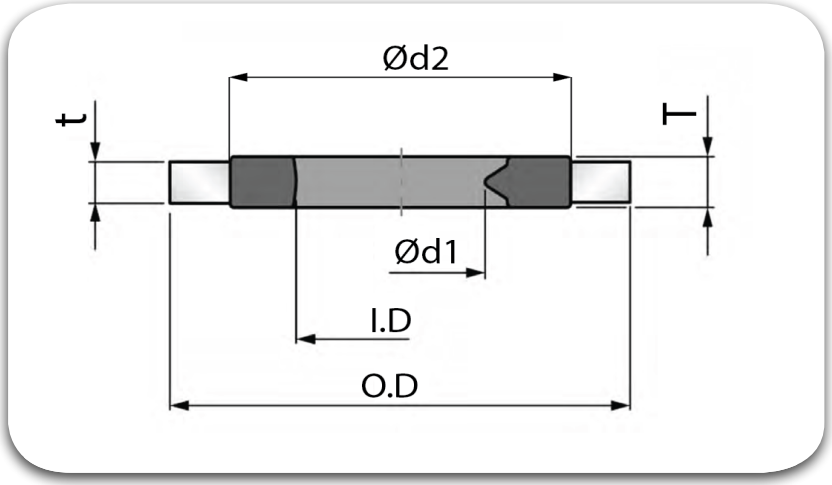

Metric Thread	O.D	Tol. ±	Ø "d2"	I.D	Tol. ±	Thickness "T"	Tol. ±	Thickness "t"	Tol. ±	Ø "d1"	bore max-Ø	pitch of thread	TRIADA® Part Numbers
M4	7.90	0.20	6.00	4.20	0.20	1.80	0.30	1.00	0.15	3.10	4.30	0.70	NBS400420 00790 0100
M5	8.90	0.20	6.40	5.20	0.20	1.80	0.30	1.00	0.15	4.00	5.30	0.80	NBS400520 00890 0100
M6	9.90	0.20	8.00	6.20	0.20	1.80	0.30	1.00	0.15	4.70	6.40	1.00	NBS400620 00990 0100
M8	13.90	0.20	11.00	8.20	0.20	2.50	0.30	1.50	0.15	6.40	8.40	1.25	NBS400820 01390 0150
M10	16.90	0.35	13.00	10.20	0.25	2.50	0.30	1.50	0.15	8.10	10.50	1.50	NBS401020 01690 0150
M12	18.90	0.35	15.00	12.20	0.25	2.50	0.30	1.50	0.15	9.80	13.00	1.75	NBS401220 01890 0150
M14	21.90	0.35	18.00	14.20	0.25	3.00	0.30	2.00	0.15	11.50	15.00	2.00	NBS401420 02190 0200
M16	23.90	0.35	20.00	16.20	0.25	3.50	0.30	2.50	0.15	13.50	17.00	2.00	NBS401620 02390 0250
M18	26.90	0.40	22.00	18.20	0.35	3.50	0.30	2.50	0.15	14.80	19.00	2.50	NBS401820 02690 0250
M20	29.90	0.40	25.00	20.20	0.35	3.70	0.30	2.50	0.15	16.80	21.00	2.50	NBS402020 02990 0250
M22	31.90	0.40	27.00	22.20	0.35	3.70	0.30	2.50	0.15	8.80	23.00	2.50	NBS402220 03190 0250
M24	35.90	0.40	29.00	24.20	0.35	4.20	0.30	3.00	0.15	20.20	25.00	3.00	NBS402420 03590 0300

Static Seals

PUO & RUO

TRIADA
TECHNOLOGIES

#Sealing**Excellence**




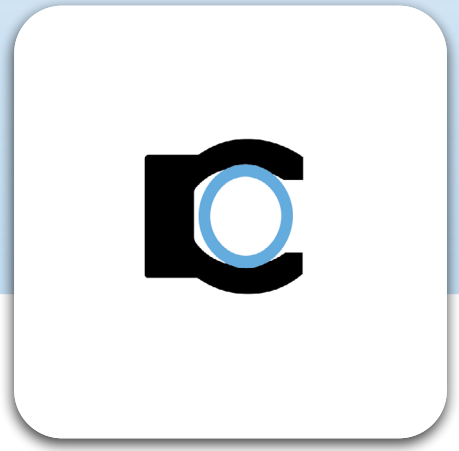

Description

PUO & RUO are the seals used for axial applications or face sealing applications where there is a high pressure, PUO is used for external sealing and RUO is used for internal sealing. The seal material is of Virgin PTFE with a (stainless steel) helical spring energizer.These seals are also used to seal the medium like gas, vacuum, low temperature flanges and many more.

Diameter Range	Ø3.00 – Ø2500
Standard material	Virgin PTFE (TRIALON® T401) is the standard compound for the Sealing Element with the Spring Energizer in Stainless Steel (S).
Temperature(°C)	-100°C to 260°C
Fluids	Hydraulic fluids (Mineral Oil based).
Pressure	< 800 bar

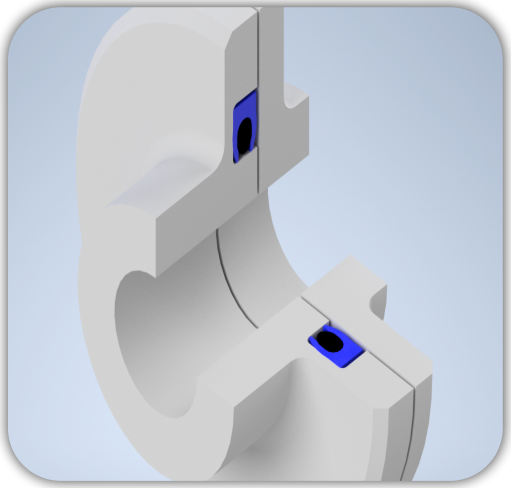

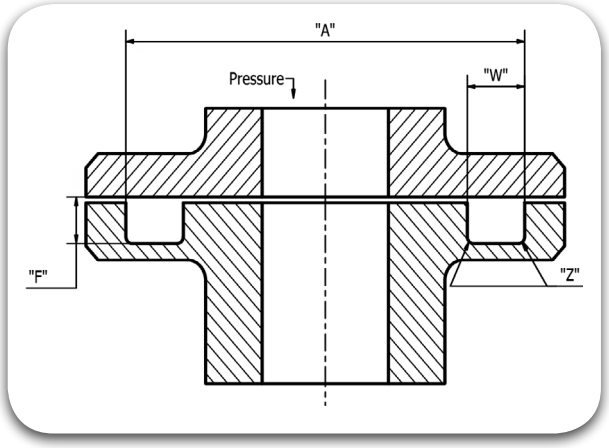

Nomenclature

Part No	RUO	12500	0950	0610	T401	S
	Seal profile	Groove OD x 10	Groove Dia x 10	Groove Width x 10	Seal Material Code	Spring Material Code

Groove dimensions for RUO

Sl. No.	Groove Outside Diameter		Groove Width "W" min.	Groove depth		Radius "Z"
	Standard Range Ø "A"	Extended Range Ø "A"		F	Tol.	
1	10.00 - 13.90	10.00 - 40.00	2.40	1.45	0.03	0.40
2	14.00 - 24.90	13.00 - 200.00	3.60	2.25	0.05	0.40
3	25.00 - 45.90	18.00 - 400.00	4.80	3.10	0.08	0.60
4	46.00 - 124.90	28.00 - 700.00	7.10	4.70	0.10	0.80

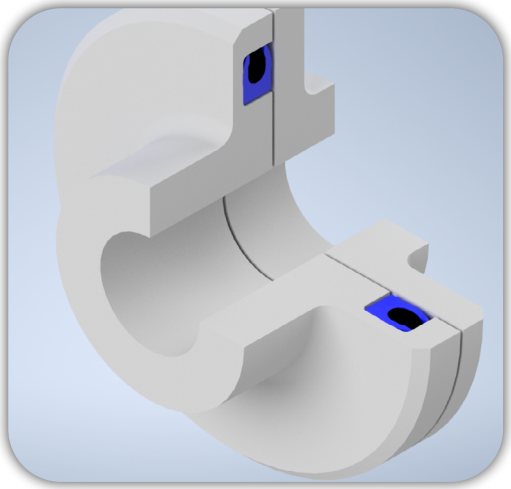

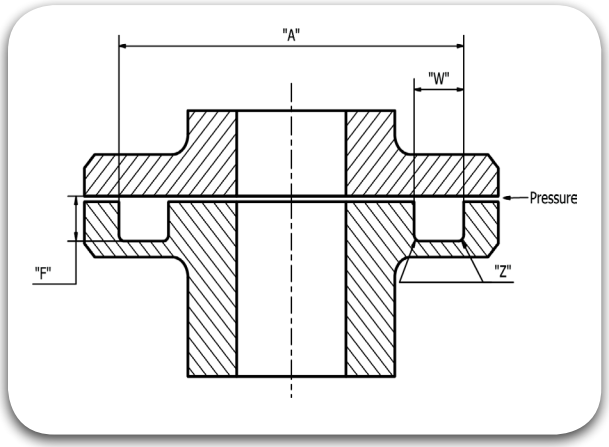

Nomenclature

Part No	PUO	12500	0950	0610	T401	S
	Seal profile	Groove OD x 10	Groove Dia x 10	Groove Width x 10	Seal Material Code	Spring Material Code

Groove dimensions for PUO

Sl. No.	Groove Outside Diameter		Groove Width "W" min.	Groove depth		Radius "Z"
	Standard Range Ø "A"	Extended Range Ø "A"		F	Tol.	
1	3.00 - 9.90	3.00 - 40.00	2.40	1.45	+0.03	0.40
2	10.00 - 19.90	8.00 - 200.00	3.60	2.25	+0.05	0.40
3	20.00 - 39.90	12.00 -400.00	4.80	3.10	+0.08	0.60
4	40.00 - 119.90	20.00 - 700.00	7.10	4.70	+0.1	0.80
5	120.00 - 999.900	35.00 - 1000.00	9.50	6.10	+0.15	0.80

TRIADA
TECHNOLOGIES

Wear Rings
Triada Sealing Guide

#SealingExcellence

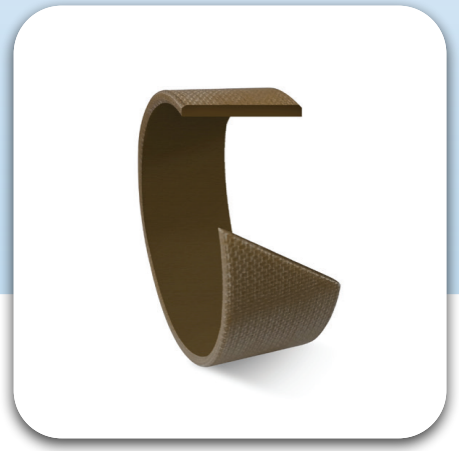

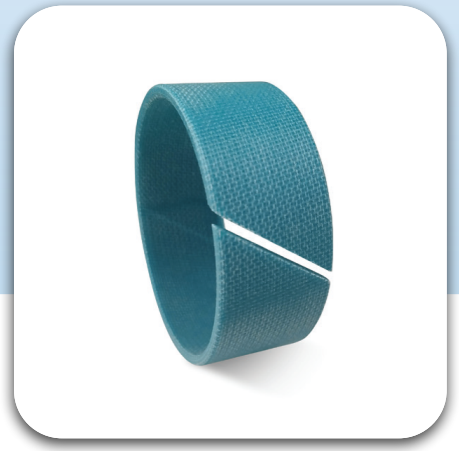


Description

Piston & Piston Rod Guide Rings (Wear Rings), plays a vital role in the successful performance and also in ensuring a long service life of any Hydraulic Actuator. Triada Technologies is proud to offer a wide range of options in these Wear Rings, both in terms of Materials as well as in the Designs. These Wear Rings are sourced from World renowned facilities and are available ex-stock for most of the standard dimensions as Machined Rings, Net Molded Rings, Spiral Coils or as Strips. Machined Rings facilitates easy assembling of the Wear Rings on to Piston or Gland assemblies and also can help to maintain close tolerances. Molded rings, mostly in POM & PA, address the cost concerns, while at the same time available as molded and subsequently Machined to maintain close tolerances and also to take care of the warping effect in Molding. Of course, these have certain limitations in terms of physical characteristics compared to other materials. Wear Rings in PEEK is always available in machined form and is mostly used in highly demanding applications.

Wear Rings/ Bearings have the primary task to precisely guide the Piston or Piston Rod of a Hydraulic Linear Actuator, at the same time absorbing the radial forces and any shocks. Usage of Wear Rings prevents the metal to metal contact, which is highly essential to improve friction characteristics and these also lower the drag pressure as low as possible, a major concern while using metallic or any other metallic Bearing Bushes. Depending on the material, these Bearings are also responsible for the housekeeping of the cylinder inside, by absorbing the contaminants in the media, to a certain extent. The material characteristic of these Wear Rings also protect the main sealing elements and even the hardware during Cavitation, taking the brunt of high temperatures, thereby making the need only to replace these low cost elements (compared to main sealing elements), while overhauling the Cylinder.

These Wear Rings are available in various forms (of course depending on material) like Machined Ring, Strips, Spiral or Spool form. Finds its applications in Mining, Construction, Material Handling, Fluid Power, Marine, Aerospace etc. Selection of the Wear Ring material, size, cut type, extrusion gaps etc. are totally depending on the application and the experienced team at TTIPL can assist on this aspect.

Wear Ring Material Details

TRIALON®								
Sl. No.	Material Code	Tensile Strength ASTM D4894	Comprsive Strength, ISO 604	Temperature Resistance ISO 75-3	Density (g/cm³) ASTM D792	Speed (m/sec)	Co-efficient of Friction 'μ'	Water Absorption ISO 62:2008 '%'
1	T414S/ T414R	28.00 N/mm²	15.00 N/mm² @ 25ºC	-60ºC to +150ºC	3.07	15.00	0.11	0.01
2	T416S/ T416R	12.00 N/mm²	15.00 N/mm² @ 25ºC	-60ºC to +200ºC	2.08	15.00	0.07	0.05

TRIATEX®								
Sl. No.	Material Code	Tensile Strength ASTM D4894	Comprsive Strength, ISO 604	Temperature Resistance ISO 75-3	Density (g/cm³) ASTM D792	Speed (m/sec)	Co-efficient of Friction 'μ'	Water Absorption ISO 62:2008 '%'
1	T431	50.00 N/mm²	270.00 N/mm²	-40ºC to +120ºC	1.25	0.80	0.25	1 to 2
2	T432	35.00 N/mm²	355.00 N/mm²	-40ºC to +130ºC	1.20	0.80	0.05	below measured limits
3	T434	50.00 N/mm²	330.00 N/mm²	-40ºC to +120ºC	1.21	1.00	0.05	< 0.10
4	T435	60.00 N/mm²	325.00 N/mm²	-40ºC to +130ºC	>1.25	1.00	0.05	< 0.20

TRIAMIDE®								
Sl. No.	Material Code	Tensile Strength	Compressive Strength	Temperature Resistance ISO 75-3	Density (g/cm³) ASTM D792, 53479	Speed (m/sec)	Co-efficient of Friction 'μ'	Water Absorption '%'
1	T484	76.00 N/mm² (ASTM D638)	75.00 N/mm² @ 60ºC	-40ºC to +130ºC	1.16	1.00	0.25	0.30 (ASTM D570)
2	T485	62.00 N/mm² (DIN 53455)	40.00 N/mm² @ 25ºC	-40ºC to +110ºC	1.56	0.80	0.25	0.20 (DIN 53495)
3	T486	172.00 N/mm² (ASTM D638)	75.00 N/mm² @ 60ºC	-40ºC to +130ºC	1.48	1.00	0.20	1.00 (ASTM D570)
4	T487	175.00 N/mm² (ASTM D638)	75.00 N/mm² @ 60ºC	-40ºC to +130ºC	1.61	2.00	0.20	0.65 (ASTM D570)
5	T489	96.00 N/mm² (ASTM D638)	75.00 N/mm² @ 60ºC	-70ºC to +250ºC	1.32	1.00	0.25	0.10 (ASTM D570)

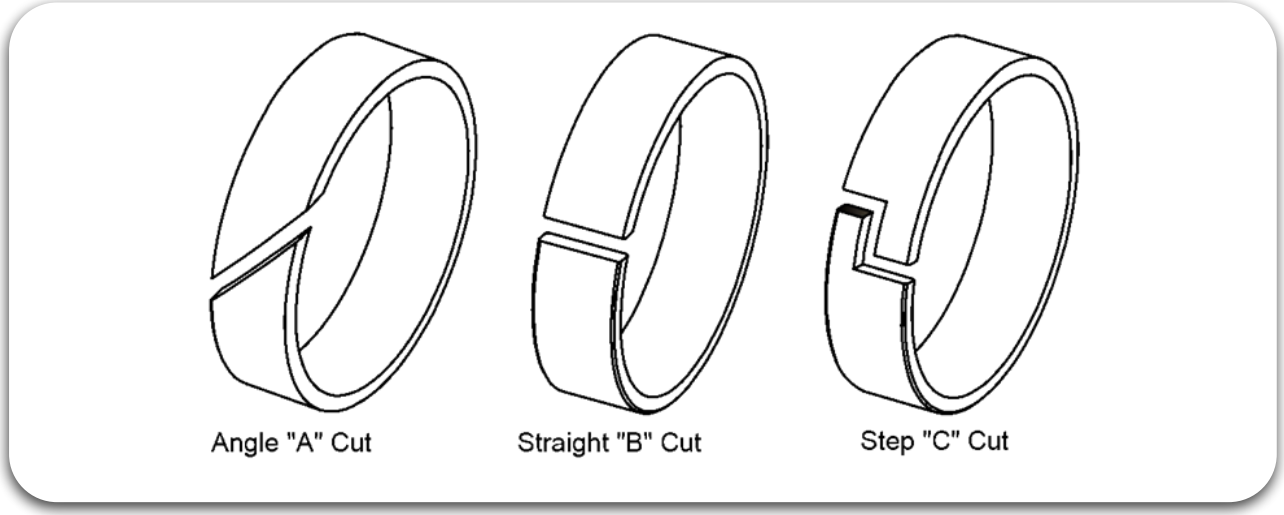

Sl. No.	TRIADA® Part Number			Wear Ring Width	Groove Width	Wear Ring Thickness
	For Rod	For Piston	Rolls in mts.			
1	TRR xxxx xxxx 025	TRP xxxx xxxx 025	TRX 025 xxxx xxxx	2.40 -0.15	2.50 +0.20	1.55 -0.02 /-0.07
2	TRR xxxx xxxx 040	TRP xxxx xxxx 040	TRX 040 xxxx xxxx	3.90 -0.15	4.00 +0.20	1.55 -0.02 /-0.07
3	TRR xxxx xxxx 056	TRP xxxx xxxx 056	TRX 056 xxxx xxxx	5.50 -0.15	5.60 +0.20	2.50 -0.02 /-0.07
4	TRR xxxx xxxx 097	TRP xxxx xxxx 097	TRX 097 xxxx xxxx	9.50 -0.20	9.70 +0.20	2.50 -0.02 /-0.07
5	TRR xxxx xxxx 097	TRP xxxx xxxx 097	TRX 097 xxxx xxxx	9.50 -0.20	9.70 +0.20	4.00 -0.02 /-0.07
6	TRR xxxx xxxx 150	TRP xxxx xxxx 150	TRX 150 xxxx xxxx	14.80 -0.30	15.00 +0.20	2.50 -0.02 /-0.07
7	TRR xxxx xxxx 250	TRP xxxx xxxx 250	TRX 250 xxxx xxxx	24.50 -0.40	25.00 +0.20	2.50 -0.02 /-0.07
8	TRR xxxx xxxx 250	TRP xxxx xxxx 250	TRX 250 xxxx xxxx	24.50 -0.40	25.00 +0.20	4.00 -0.02 /-0.07

Nomenclature

Part No	TRP	0500	0450	097	T434	R
	Seal profile	Rod Dia x 10	Groove Dia x 10	Groove Width x 10	Material Code	Wear Ring form

Nomenclature

Part No	TRR	0600	0650	150	T414	S
	Seal profile	Rod Dia x 10	Groove Dia x 10	Groove Width x 10	Material Code	Wear Ring form

Nomenclature

Part No	TRX	0250	0600	0480	T414	S
	Seal profile	Wear Ring thickness x 1	Wear Ring Width x 10	Wear Ring Length x 10	Material Code	Wear Ring form

TRP Assembly

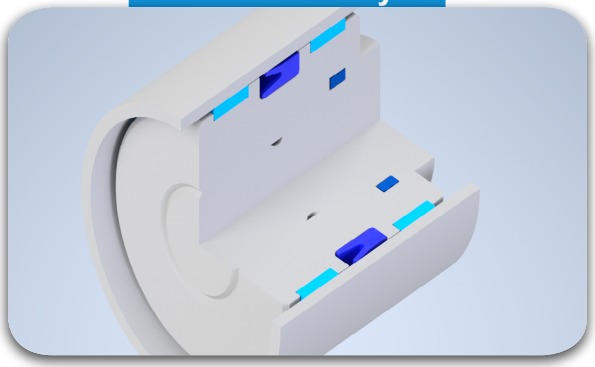

TRR Assembly

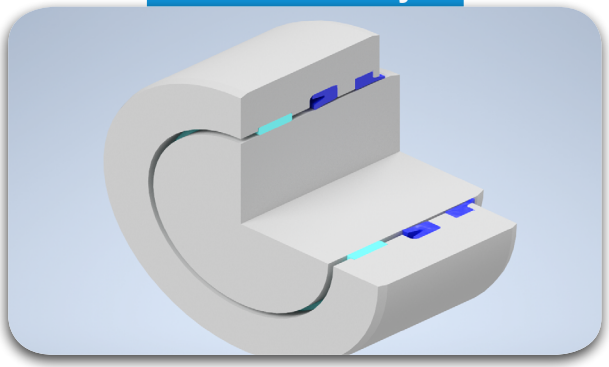

Wear Ring Form	Code
Ring	R
Strip	S

Bore Dia. ØA	Radial Clearance "E" Min.	Radial Clearance "E" Max.
8 - 20	0.20	0.30
20 - 100	0.25	0.40
101 - 250	0.30	0.60
251 - 500	0.40	0.80
501 - 1000	0.50	1.10
> 1000	0.60	1.20

Rod Dia. ØA	Radial Clearance "E" Min.	Radial Clearance "E" Max.
8 - 20	0.20	0.30
20 - 100	0.25	0.40
101 - 250	0.30	0.60
251 - 500	0.40	0.80
501 - 1000	0.50	1.10
> 1000	0.60	1.20

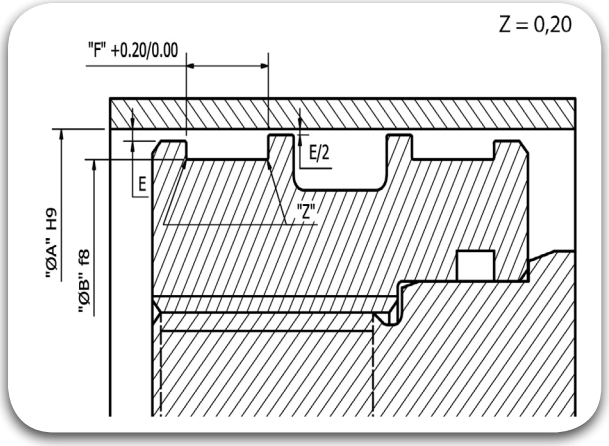

8.00

Part No	TRP 0080 0049 025				
Groove Dimension	ØA	x	ØB	x	F
	8.00		4.90		2.50

10.00

Part No	TRP 0100 0069 025				
Groove Dimension	ØA	x	ØB	x	F
	10.00		6.90		2.50

10.00

Part No	TRP 0100 0069 040				
Groove Dimension	ØA	x	ØB	x	F
	10.00		6.90		4.00

12.00

Part No	TRP 0120 0089 040				
Groove Dimension	ØA	x	ØB	x	F
	12.00		8.90		4.00

14.00

Part No	TRP 0140 0109 040				
Groove Dimension	ØA	x	ØB	x	F
	14.00		10.90		4.00

15.00

Part No	TRP 0150 0119 040				
Groove Dimension	ØA	x	ØB	x	F
	15.00		11.90		4.00

16.00

Part No	TRP 0160 0129 040				
Groove Dimension	ØA	x	ØB	x	F
	16.00		12.90		4.00

16.00

Part No	TRP 0160 0110 056				
Groove Dimension	ØA	x	ØB	x	F
	16.00		11.00		5.60

18.00

Part No	TRP 0180 0149 040				
Groove Dimension	ØA	x	ØB	x	F
	18.00		14.90		4.00

18.00

Part No	TRP 0180 0130 056				
Groove Dimension	ØA	x	ØB	x	F
	18.00		13.00		5.60

20.00

Part No	TRP 0200 0169 040				
Groove Dimension	ØA	x	ØB	x	F
	20.00		16.90		4.00

20.00

Part No	TRP 0200 0150 056				
Groove Dimension	ØA	x	ØB	x	F
	20.00		15.00		5.60

22.00

Part No	TRP 0220 0170 056				
Groove Dimension	ØA	x	ØB	x	F
	22.00		17.00		5.60

25.00

Part No	TRP 0250 0219 040					
Groove Dimension	ØA	x	ØB	x	F	
	25.00		21.90		4.00	

25.00

Part No	TRP 0250 0200 056					
Groove Dimension	ØA	x	ØB	x	F	
	25.00		20.00		5.60	

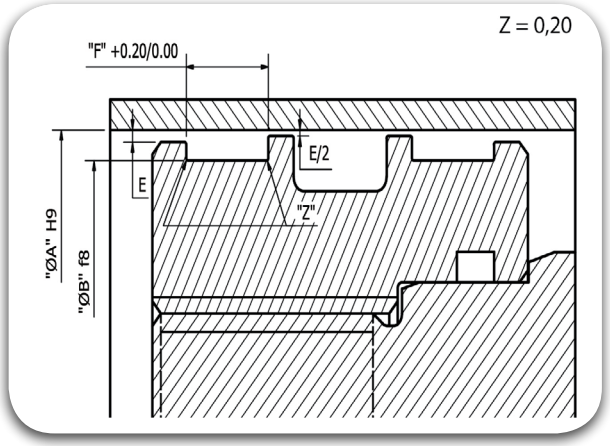

25.00

Part No	TRP 0250 0200 097					
Groove Dimension	ØA	x	ØB	x	F	
	25.00		20.00		9.70	

27.00

Part No	TRP 0270 0220 056					
Groove Dimension	ØA	x	ØB	x	F	
	27.00		22.00		5.60	

27.00

Part No	TRP 0270 0220 097					
Groove Dimension	ØA	x	ØB	x	F	
	27.00		22.00		9.70	

28.00

Part No	TRP 0280 0230 056					
Groove Dimension	ØA	x	ØB	x	F	
	28.00		23.00		5.60	

30.00

Part No	TRP 0300 0269 040					
Groove Dimension	ØA	x	ØB	x	F	
	30.00		26.90		4.00	

30.00

Part No	TRP 0300 0250 056					
Groove Dimension	ØA	x	ØB	x	F	
	30.00		25.00		5.60	

30.00

Part No	TRP 0300 0250 097					
Groove Dimension	ØA	x	ØB	x	F	
	30.00		25.00		9.70	

32.00

Part No	TRP 0320 0289 040					
Groove Dimension	ØA	x	ØB	x	F	
	32.00		28.90		4.00	

32.00

Part No	TRP 0320 0270 056					
Groove Dimension	ØA	x	ØB	x	F	
	32.00		27.00		5.60	

32.00

Part No	TRP 0320 0270 097					
Groove Dimension	ØA	x	ØB	x	F	
	32.00		27.00		9.70	

33.00

Part No	TRP 0330 0280 056					
Groove Dimension	ØA	x	ØB	x	F	
	33.00		28.00		5.60	

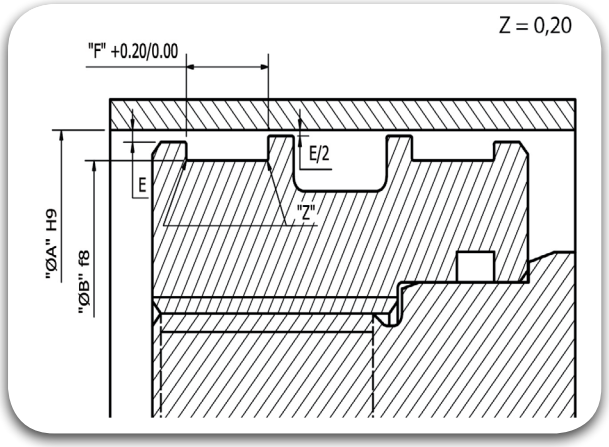

35.00

Part No	TRP 0350 0300 056				
Groove Dimension	ØA	x	ØB	x	F
	35.00		30.00		5.60

35.00

Part No	TRP 0350 0300 097				
Groove Dimension	ØA	x	ØB	x	F
	35.00		30.00		9.70

36.00

Part No	TRP 0360 0319 040				
Groove Dimension	ØA	x	ØB	x	F
	36.00		31.90		4.00

37.00

Part No	TRP 0370 0320 056				
Groove Dimension	ØA	x	ØB	x	F
	37.00		32.00		5.60

37.00

Part No	TRP 0370 0320 097				
Groove Dimension	ØA	x	ØB	x	F
	37.00		32.00		9.70

40.00

Part No	TRP 0400 0369 040				
Groove Dimension	ØA	x	ØB	x	F
	40.00		36.90		4.00

40.00

Part No	TRP 0400 0350 056				
Groove Dimension	ØA	x	ØB	x	F
	40.00		35.00		5.60

40.00

Part No	TRP 0400 0350 097				
Groove Dimension	ØA	x	ØB	x	F
	40.00		35.00		9.70

41.00

Part No	TRP 0410 0360 056				
Groove Dimension	ØA	x	ØB	x	F
	41.00		36.00		5.60

41.00

Part No	TRP 0410 0360 097				
Groove Dimension	ØA	x	ØB	x	F
	41.00		36.00		9.70

42.00

Part No	TRP 0420 0370 056				
Groove Dimension	ØA	x	ØB	x	F
	42.00		37.00		5.60

45.00

Part No	TRP 0450 0400 056				
Groove Dimension	ØA	x	ØB	x	F
	45.00		40.00		5.60

45.00

Part No	TRP 0450 0400 097				
Groove Dimension	ØA	x	ØB	x	F
	45.00		40.00		9.70

48.00

Part No	TRP 0480 0430 056
Groove Dimension	ØA 48.00 x ØB 43.00 x F 5.60

50.00

Part No	TRP 0500 0469 040
Groove Dimension	ØA 50.00 x ØB 46.90 x F 4.00

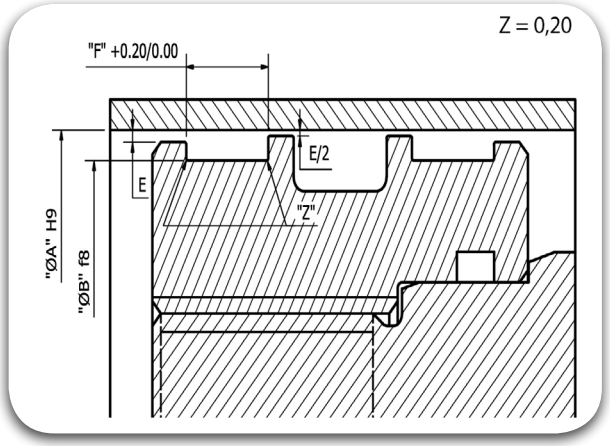

50.00

Part No	TRP 0500 0450 056
Groove Dimension	ØA 50.00 x ØB 45.00 x F 5.60

50.00

Part No	TRP 0500 0450 097
Groove Dimension	ØA 50.00 x ØB 45.00 x F 9.70

52.00

Part No	TRP 0520 0470 056
Groove Dimension	ØA 52.00 x ØB 47.00 x F 5.60

55.00

Part No	TRP 0550 0500 056
Groove Dimension	ØA 55.00 x ØB 50.00 x F 5.60

55.00

Part No	TRP 0550 0500 097
Groove Dimension	ØA 55.00 x ØB 50.00 x F 9.70

60.00

Part No	TRP 0600 0550 056
Groove Dimension	ØA 60.00 x ØB 55.00 x F 5.60

60.00

Part No	TRP 0600 0550 097
Groove Dimension	ØA 60.00 x ØB 55.00 x F 9.70

61.00

Part No	TRP 0610 0560 056
Groove Dimension	ØA 61.00 x ØB 56.00 x F 5.60

62.00

Part No	TRP 0620 0560 097
Groove Dimension	ØA 62.00 x ØB 56.00 x F 9.70

63.00

Part No	TRP 0630 0580 056
Groove Dimension	ØA 63.00 x ØB 58.00 x F 5.60

63.00

Part No	TRP 0630 0580 097
Groove Dimension	ØA 63.00 x ØB 58.00 x F 9.70

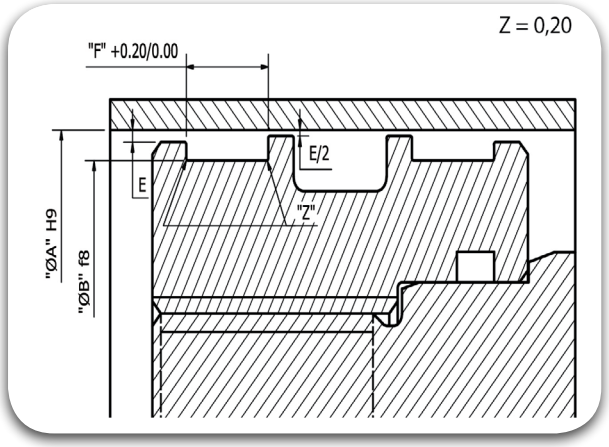

65.00

Part No	TRP 0650 0600 056				
Groove Dimension	ØA	x	ØB	x	F
	65.00		60.00		5.60

65.00

Part No	TRP 0650 0600 097				
Groove Dimension	ØA	x	ØB	x	F
	65.00		60.00		9.70

68.00

Part No	TRP 0680 0630 056				
Groove Dimension	ØA	x	ØB	x	F
	68.00		63.00		5.60

68.00

Part No	TRP 0680 0630 097				
Groove Dimension	ØA	x	ØB	x	F
	68.00		63.00		9.70

70.00

Part No	TRP 0700 0650 056				
Groove Dimension	ØA	x	ØB	x	F
	70.00		65.00		5.60

70.00

Part No	TRP 0700 0650 097				
Groove Dimension	ØA	x	ØB	x	F
	70.00		65.00		9.70

72.00

Part No	TRP 0720 0670 056				
Groove Dimension	ØA	x	ØB	x	F
	72.00		67.00		5.60

75.00

Part No	TRP 0750 0700 056				
Groove Dimension	ØA	x	ØB	x	F
	75.00		70.00		5.60

75.00

Part No	TRP 0750 0700 097				
Groove Dimension	ØA	x	ØB	x	F
	75.00		70.00		9.70

80.00

Part No	TRP 0800 0750 056				
Groove Dimension	ØA	x	ØB	x	F
	80.00		75.00		5.60

80.00

Part No	TRP 0800 0750 097				
Groove Dimension	ØA	x	ØB	x	F
	80.00		75.00		9.70

85.00

Part No	TRP 0850 0800 056				
Groove Dimension	ØA	x	ØB	x	F
	85.00		80.00		5.60

85.00

Part No	TRP 0850 0800 097				
Groove Dimension	ØA	x	ØB	x	F
	85.00		80.00		9.70

90.00

Part No	TRP 0900 0850 056					
Groove Dimension	ØA	x	ØB	x	F	
	90.00		85.00		5.60	

90.00

Part No	TRP 0900 0850 097					
Groove Dimension	ØA	x	ØB	x	F	
	90.00		85.00		9.70	

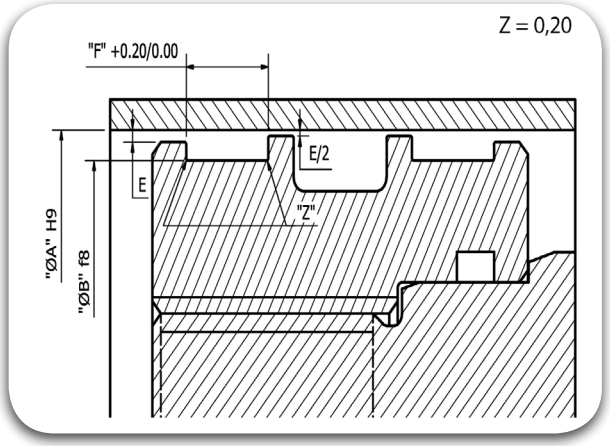

95.00

Part No	TRP 0950 0900 056					
Groove Dimension	ØA	x	ØB	x	F	
	95.00		90.00		5.60	

95.00

Part No	TRP 0950 0900 097					
Groove Dimension	ØA	x	ØB	x	F	
	95.00		90.00		9.70	

100.00

Part No	TRP 1000 0950 056					
Groove Dimension	ØA	x	ØB	x	F	
	100.00		95.00		5.60	

100.00

Part No	TRP 1000 0950 097					
Groove Dimension	ØA	x	ØB	x	F	
	100.00		95.00		9.70	

105.00

Part No	TRP 1050 1000 056					
Groove Dimension	ØA	x	ØB	x	F	
	105.00		100.00		5.60	

105.00

Part No	TRP 1050 1000 097					
Groove Dimension	ØA	x	ØB	x	F	
	105.00		100.00		9.70	

110.00

Part No	TRP 1110 1050 097					
Groove Dimension	ØA	x	ØB	x	F	
	110.00		105.00		9.70	

115.00

Part No	TRP 1150 1100 097					
Groove Dimension	ØA	x	ØB	x	F	
	115.00		110.00		9.70	

120.00

Part No	TRP 1200 1150 097					
Groove Dimension	ØA	x	ØB	x	F	
	120.00		115.00		9.70	

125.00

Part No	TRP 1250 1200 056					
Groove Dimension	ØA	x	ØB	x	F	
	125.00		120.00		5.60	

125.00

Part No	TRP 1250 1200 097					
Groove Dimension	ØA	x	ØB	x	F	
	125.00		120.00		9.70	

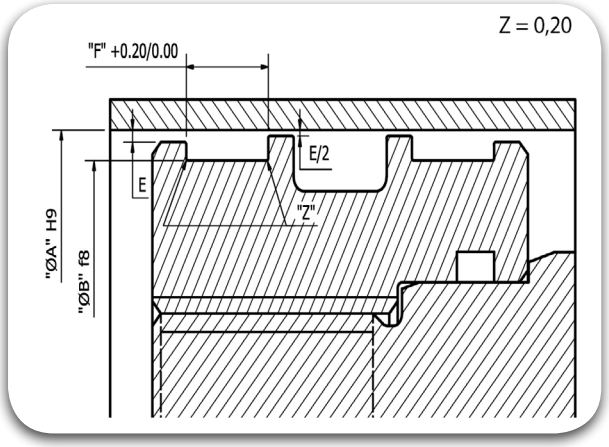

130.00

Part No	TRP 1300 1250 097				
Groove Dimension	ØA	x	ØB	x	F
	130.00		125.00		9.70

130.00

Part No	TRP 1300 1250 150				
Groove Dimension	ØA	x	ØB	x	F
	130.00		125.00		15.00

135.00

Part No	TRP 1350 1300 097				
Groove Dimension	ØA	x	ØB	x	F
	135.00		130.00		9.70

135.00

Part No	TRP 1350 1300 150				
Groove Dimension	ØA	x	ØB	x	F
	135.00		130.00		15.00

140.00

Part No	TRP 1400 1350 097				
Groove Dimension	ØA	x	ØB	x	F
	140.00		135.00		9.70

140.00

Part No	TRP 1400 1350 150				
Groove Dimension	ØA	x	ØB	x	F
	140.00		135.00		15.00

150.00

Part No	TRP 1500 1450 150				
Groove Dimension	ØA	x	ØB	x	F
	150.00		145.00		15.00

160.00

Part No	TRP 1600 1550 097				
Groove Dimension	ØA	x	ØB	x	F
	160.00		155.00		9.70

160.00

Part No	TRP 1600 1550 150				
Groove Dimension	ØA	x	ØB	x	F
	160.00		155.00		15.00

170.00

Part No	TRP 1700 1650 150				
Groove Dimension	ØA	x	ØB	x	F
	170.00		165.00		15.00

180.00

Part No	TRP 1800 1750 097				
Groove Dimension	ØA	x	ØB	x	F
	180.00		175.00		9.70

180.00

Part No	TRP 1800 1750 150				
Groove Dimension	ØA	x	ØB	x	F
	180.00		175.00		15.00

190.00

Part No	TRP 1900 1850 150				
Groove Dimension	ØA	x	ØB	x	F
	190.00		185.00		15.00

200.00

Part No	TRP 2000 1950 097		
Groove Dimension	ØA	ØB	F
	200.00	195.00	9.70

200.00

Part No	TRP 2000 1950 150		
Groove Dimension	ØA	ØB	F
	200.00	195.00	15.00

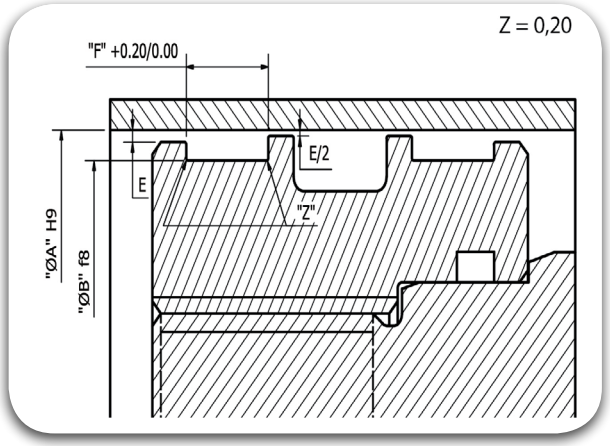

210.00

Part No	TRP 2100 2050 150		
Groove Dimension	ØA	ØB	F
	210.00	205.00	15.00

220.00

Part No	TRP 2200 2150 097		
Groove Dimension	ØA	ØB	F
	220.00	215.00	9.70

220.00

Part No	TRP 2200 2150 150		
Groove Dimension	ØA	ØB	F
	220.00	215.00	15.00

230.00

Part No	TRP 2300 2250 150		
Groove Dimension	ØA	ØB	F
	230.00	225.00	15.00

240.00

Part No	TRP 2400 2350 150		
Groove Dimension	ØA	ØB	F
	240.00	235.00	15.00

250.00

Part No	TRP 2500 2450 097		
Groove Dimension	ØA	ØB	F
	250.00	245.00	9.70

250.00

Part No	TRP 2500 2450 150		
Groove Dimension	ØA	ØB	F
	250.00	245.00	15.00

280.00

Part No	TRP 2800 2750 150		
Groove Dimension	ØA	ØB	F
	280.00	275.00	15.00

280.00

Part No	TRP 2800 2750 250		
Groove Dimension	ØA	ØB	F
	280.00	275.00	25.00

280.00

Part No	TRP 2800 2720 250		
Groove Dimension	ØA	ØB	F
	280.00	272.00	25.00

300.00

Part No	TRP 3000 2950 015		
Groove Dimension	ØA	ØB	F
	300.00	295.00	15.00

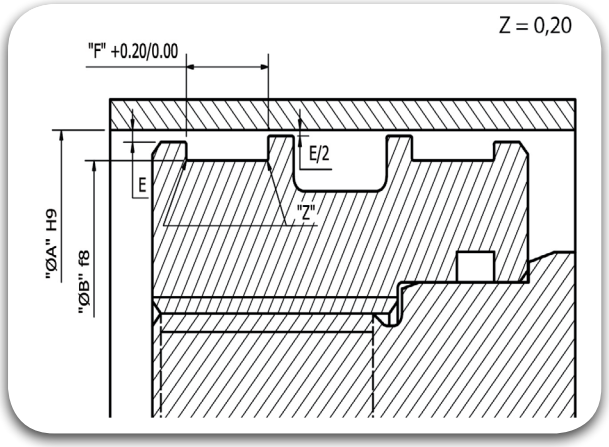

320.00

Part No	TRP 3200 3150 150					
Groove Dimension	ØA	x	ØB	x	F	
	320.00		315.00		15.00	

320.00

Part No	TRP 3200 3150 250					
Groove Dimension	ØA	x	ØB	x	F	
	320.00		315.00		25.00	

320.00

Part No	TRP 3200 3120 250					
Groove Dimension	ØA	x	ØB	x	F	
	320.00		312.00		25.00	

350.00

Part No	TRP 3500 3450 250					
Groove Dimension	ØA	x	ØB	x	F	
	350.00		345.00		25.00	

360.00

Part No	TRP 3600 3550 150					
Groove Dimension	ØA	x	ØB	x	F	
	360.00		355.00		15.00	

360.00

Part No	TRP 3600 3550 250					
Groove Dimension	ØA	x	ØB	x	F	
	360.00		355.00		25.00	

360.00

Part No	TRP 3600 3520 250					
Groove Dimension	ØA	x	ØB	x	F	
	360.00		352.00		25.00	

400.00

Part No	TRP 4000 3950 150					
Groove Dimension	ØA	x	ØB	x	F	
	400.00		395.00		15.00	

400.00

Part No	TRP 4000 3950 250					
Groove Dimension	ØA	x	ØB	x	F	
	400.00		395.00		25.00	

400.00

Part No	TRP 4000 3920 250					
Groove Dimension	ØA	x	ØB	x	F	
	400.00		392.00		25.00	

450.00

Part No	TRP 4500 4450 150					
Groove Dimension	ØA	x	ØB	x	F	
	450.00		445.00		15.00	

450.00

Part No	TRP 4500 4450 250					
Groove Dimension	ØA	x	ØB	x	F	
	450.00		445.00		25.00	

450.00

Part No	TRP 4500 4420 250					
Groove Dimension	ØA	x	ØB	x	F	
	450.00		442.00		25.00	

500.00

Part No	TRP 5000 4950 150					
Groove Dimension	ØA	x	ØB	x	F	
	500.00		495.00		15.00	

500.00

Part No	TRP 5000 4950 250					
Groove Dimension	ØA	x	ØB	x	F	
	500.00		495.00		25.00	

500.00

Part No	TRP 5000 4920 250					
Groove Dimension	ØA	x	ØB	x	F	
	500.00		492.00		25.00	

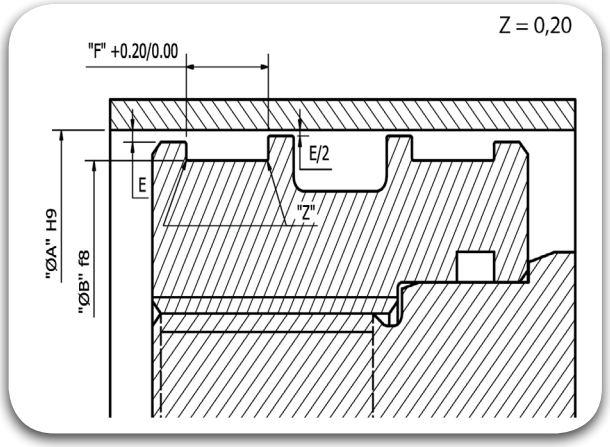

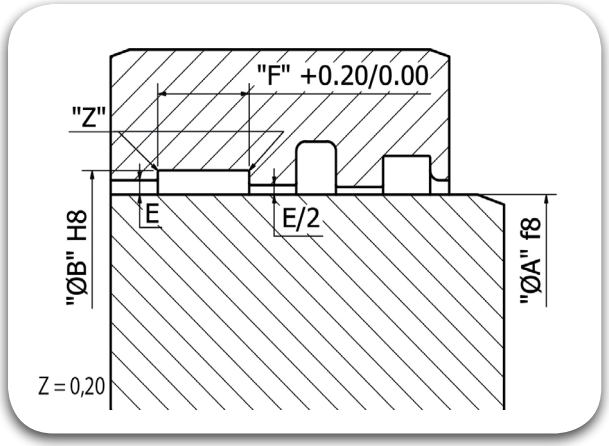

8.00

Part No	TRR 0080 0111 025				
Groove Dimension	ØA	x	ØB	x	F
	8.00		11.10		2.50

10.00

Part No	TRR 0100 0131 025				
Groove Dimension	ØA	x	ØB	x	F
	10.00		13.10		2.50

10.00

Part No	TRR 0100 0131 040				
Groove Dimension	ØA	x	ØB	x	F
	10.00		13.10		4.00

12.00

Part No	TRR 0120 0151 040				
Groove Dimension	ØA	x	ØB	x	F
	12.00		15.10		4.00

14.00

Part No	TRR 0140 0171 040				
Groove Dimension	ØA	x	ØB	x	F
	14.00		17.10		4.00

15.00

Part No	TRR 0150 0181 040				
Groove Dimension	ØA	x	ØB	x	F
	15.00		18.10		4.00

16.00

Part No	TRR 0160 0191 040				
Groove Dimension	ØA	x	ØB	x	F
	16.00		19.10		4.00

16.00

Part No	TRR 0160 0210 056				
Groove Dimension	ØA	x	ØB	x	F
	16.00		21.00		5.60

18.00

Part No	TRR 0180 0211 040				
Groove Dimension	ØA	x	ØB	x	F
	18.00		21.10		4.00

18.00

Part No	TRR 0180 0230 056				
Groove Dimension	ØA	x	ØB	x	F
	18.00		23.00		5.60

20.00

Part No	TRR 0200 0231 040				
Groove Dimension	ØA	x	ØB	x	F
	20.00		23.10		4.00

20.00

Part No	TRR 0200 0250 056				
Groove Dimension	ØA	x	ØB	x	F
	20.00		25.00		5.60

20.00

Part No	TRR 0200 0250 097				
Groove Dimension	ØA	x	ØB	x	F
	20.00		25.00		9.70

22.00

Part No	TRR 0220 0251 040					
Groove Dimension	ØA	x	ØB	x	F	
	22.00		25.10		4.00	

22.00

Part No	TRR 0220 0270 056					
Groove Dimension	ØA	x	ØB	x	F	
	22.00		27.00		5.60	

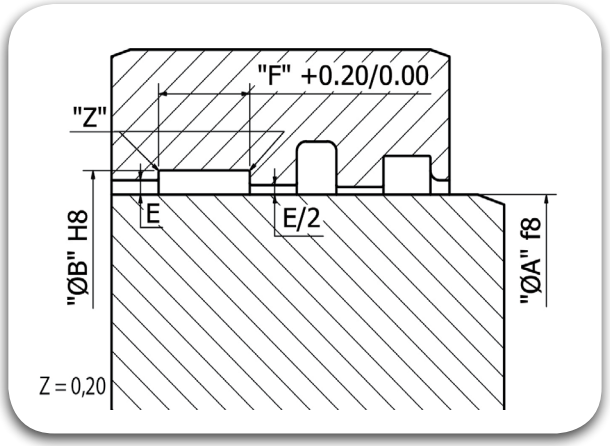

22.00

Part No	TRR 0220 0270 097					
Groove Dimension	ØA	x	ØB	x	F	
	22.00		27.00		9.70	

25.00

Part No	TRR 0250 0281 040					
Groove Dimension	ØA	x	ØB	x	F	
	25.00		28.10		4.00	

25.00

Part No	TRR 0250 0300 056					
Groove Dimension	ØA	x	ØB	x	F	
	25.00		30.00		5.60	

25.00

Part No	TRR 0250 0300 097					
Groove Dimension	ØA	x	ØB	x	F	
	25.00		30.00		9.70	

27.00

Part No	TRR 0270 0320 056					
Groove Dimension	ØA	x	ØB	x	F	
	27.00		32.00		5.60	

27.00

Part No	TRR 0270 0320 097					
Groove Dimension	ØA	x	ØB	x	F	
	27.00		32.00		9.70	

28.00

Part No	TRR 0280 0311 040					
Groove Dimension	ØA	x	ØB	x	F	
	28.00		31.10		4.00	

28.00

Part No	TRR 0280 0330 056					
Groove Dimension	ØA	x	ØB	x	F	
	28.00		33.00		5.60	

28.00

Part No	TRR 0280 0330 097					
Groove Dimension	ØA	x	ØB	x	F	
	28.00		33.00		9.70	

30.00

Part No	TRR 0300 0350 056					
Groove Dimension	ØA	x	ØB	x	F	
	30.00		35.00		5.60	

30.00

Part No	TRR 0300 0350 097					
Groove Dimension	ØA	x	ØB	x	F	
	30.00		35.00		9.70	

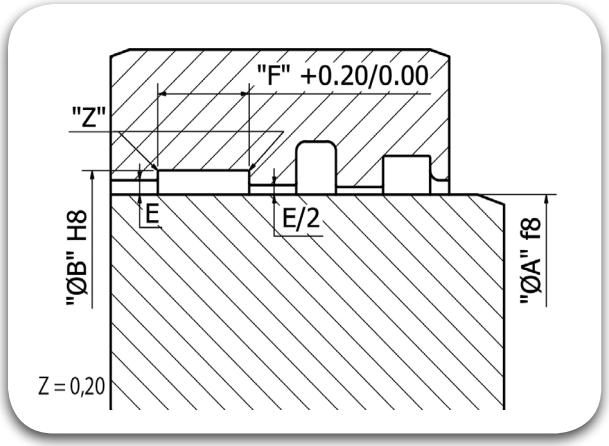

32.00

Part No	TRR 0320 0370 056					
Groove Dimension	ØA	x	ØB	x	F	
	32.00		37.00		5.60	

32.00

Part No	TRR 0320 0370 097					
Groove Dimension	ØA	x	ØB	x	F	
	32.00		37.00		9.70	

35.00

Part No	TRR 0350 0400 056					
Groove Dimension	ØA	x	ØB	x	F	
	35.00		40.00		5.60	

35.00

Part No	TRR 0350 0400 097					
Groove Dimension	ØA	x	ØB	x	F	
	35.00		40.00		9.70	

36.00

Part No	TRR 0360 0410 056					
Groove Dimension	ØA	x	ØB	x	F	
	36.00		41.00		5.60	

36.00

Part No	TRR 0360 0410 097					
Groove Dimension	ØA	x	ØB	x	F	
	36.00		41.00		9.70	

40.00

Part No	TRR 0400 0450 056					
Groove Dimension	ØA	x	ØB	x	F	
	40.00		45.00		5.60	

40.00

Part No	TRR 0040 0450 097					
Groove Dimension	ØA	x	ØB	x	F	
	40.00		45.00		9.70	

40.00

Part No	TRR 0400 0450 150					
Groove Dimension	ØA	x	ØB	x	F	
	40.00		45.00		15.00	

42.00

Part No	TRR 0420 0470 056					
Groove Dimension	ØA	x	ØB	x	F	
	42.00		47.00		5.60	

43.00

Part No	TRR 0430 0480 056					
Groove Dimension	ØA	x	ØB	x	F	
	43.00		48.00		5.60	

45.00

Part No	TRR 0450 0500 056					
Groove Dimension	ØA	x	ØB	x	F	
	45.00		50.00		5.60	

45.00

Part No	TRR 0450 0500 097					
Groove Dimension	ØA	x	ØB	x	F	
	45.00		50.00		9.70	

48.00

Part No	TRR 0480 0530 056					
Groove Dimension	ØA	x	ØB	x	F	
	48.00		53.00		5.60	

48.00

Part No	TRR 0480 0530 097					
Groove Dimension	ØA	x	ØB	x	F	
	48.00		53.00		9.70	

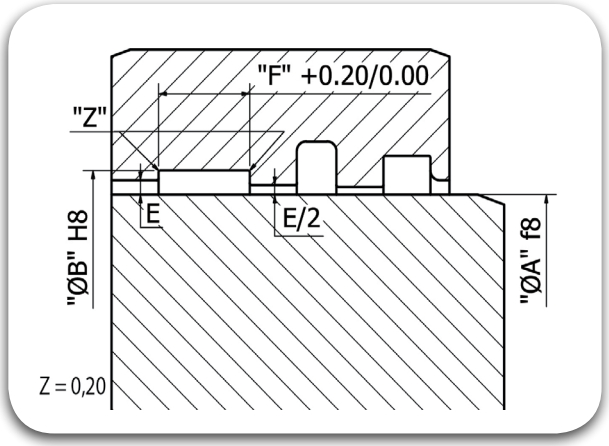

50.00

Part No	TRR 0500 0550 056					
Groove Dimension	ØA	x	ØB	x	F	
	50.00		55.00		5.60	

50.00

Part No	TRR 0500 0550 097					
Groove Dimension	ØA	x	ØB	x	F	
	50.00		55.00		9.70	

52.00

Part No	TRR 0520 0570 056					
Groove Dimension	ØA	x	ØB	x	F	
	52.00		57.00		5.60	

52.00

Part No	TRR 0520 0570 097					
Groove Dimension	ØA	x	ØB	x	F	
	52.00		57.00		9.70	

55.00

Part No	TRR 0550 0600 056					
Groove Dimension	ØA	x	ØB	x	F	
	55.00		60.00		5.60	

55.00

Part No	TRR 0550 0600 097					
Groove Dimension	ØA	x	ØB	x	F	
	55.00		60.00		9.70	

56.00

Part No	TRR 0560 0610 056					
Groove Dimension	ØA	x	ØB	x	F	
	56.00		61.00		5.60	

56.00

Part No	TRR 0560 0610 097					
Groove Dimension	ØA	x	ØB	x	F	
	56.00		61.00		9.70	

58.00

Part No	TRR 0580 0630 056					
Groove Dimension	ØA	x	ØB	x	F	
	58.00		63.00		5.60	

58.00

Part No	TRR 0580 0630 097					
Groove Dimension	ØA	x	ØB	x	F	
	58.00		63.00		9.70	

60.00

Part No	TRR 0600 0650 056					
Groove Dimension	ØA	x	ØB	x	F	
	60.00		65.00		5.60	

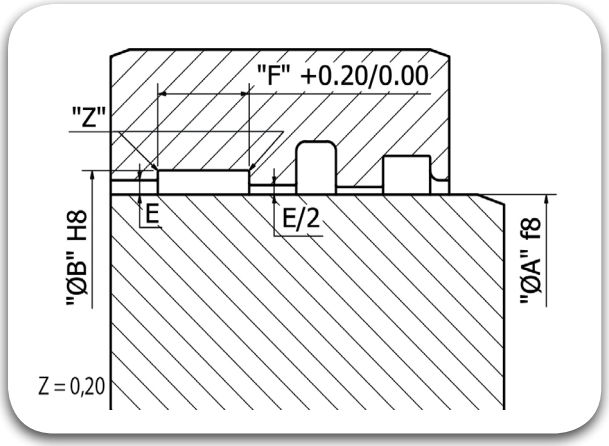

60.00

Part No	TRR 0600 0650 097				
Groove Dimension	ØA	x	ØB	x	F
	60.00		65.00		9.70

63.00

Part No	TRR 0630 0680 056				
Groove Dimension	ØA	x	ØB	x	F
	63.00		68.00		5.60

63.00

Part No	TRR 0630 0680 097				
Groove Dimension	ØA	x	ØB	x	F
	63.00		68.00		9.70

63.00

Part No	TRR 0630 0680 150				
Groove Dimension	ØA	x	ØB	x	F
	63.00		68.00		15.00

65.00

Part No	TRR 0650 0700 056				
Groove Dimension	ØA	x	ØB	x	F
	65.00		70.00		5.60

65.00

Part No	TRR 0650 0700 097				
Groove Dimension	ØA	x	ØB	x	F
	65.00		70.00		9.70

70.00

Part No	TRR 0700 0750 056				
Groove Dimension	ØA	x	ØB	x	F
	70.00		75.00		5.60

70.00

Part No	TRR 0700 0750 097				
Groove Dimension	ØA	x	ØB	x	F
	70.00		75.00		9.70

70.00

Part No	TRR 0700 0750 150				
Groove Dimension	ØA	x	ØB	x	F
	70.00		75.00		15.00

75.00

Part No	TRR 0750 0800 056				
Groove Dimension	ØA	x	ØB	x	F
	75.00		80.00		5.60

75.00

Part No	TRR 0750 0800 097				
Groove Dimension	ØA	x	ØB	x	F
	75.00		80.00		9.70

75.00

Part No	TRR 0750 0800 150				
Groove Dimension	ØA	x	ØB	x	F
	75.00		80.00		15.00

80.00

Part No	TRR 0800 0850 056				
Groove Dimension	ØA	x	ØB	x	F
	80.00		85.00		5.60

80.00

Part No	TRR 0800 0850 097					
Groove Dimension	ØA	x	ØB	x	F	
	80.00		85.00		9.70	

80.00

Part No	TRR 0800 0850 150					
Groove Dimension	ØA	x	ØB	x	F	
	80.00		85.00		15.00	

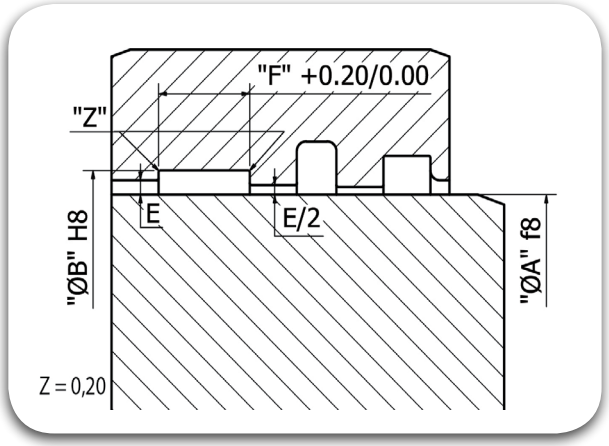

85.00

Part No	TRR 0850 0900 056					
Groove Dimension	ØA	x	ØB	x	F	
	85.00		90.00		5.60	

85.00

Part No	TRR 0850 0900 097					
Groove Dimension	ØA	x	ØB	x	F	
	85.00		90.00		9.70	

90.00

Part No	TRR 0900 0950 056					
Groove Dimension	ØA	x	ØB	x	F	
	90.00		95.00		5.60	

90.00

Part No	TRR 0900 0950 097					
Groove Dimension	ØA	x	ØB	x	F	
	90.00		95.00		9.70	

90.00

Part No	TRR 0900 0950 150					
Groove Dimension	ØA	x	ØB	x	F	
	90.00		95.00		15.00	

95.00

Part No	TRR 0950 1000 097					
Groove Dimension	ØA	x	ØB	x	F	
	95.00		100.00		9.70	

95.00

Part No	TRR 0950 1000 150					
Groove Dimension	ØA	x	ØB	x	F	
	95.00		100.00		15.00	

100.00

Part No	TRR 1000 1050 056					
Groove Dimension	ØA	x	ØB	x	F	
	100.00		105.00		5.60	

100.00

Part No	TRR 1000 1050 097					
Groove Dimension	ØA	x	ØB	x	F	
	100.00		105.00		9.70	

100.00

Part No	TRR 1000 1050 150					
Groove Dimension	ØA	x	ØB	x	F	
	100.00		105.00		15.00	

105.00

Part No	TRR 1050 1100 097					
Groove Dimension	ØA	x	ØB	x	F	
	105.00		110.00		9.70	

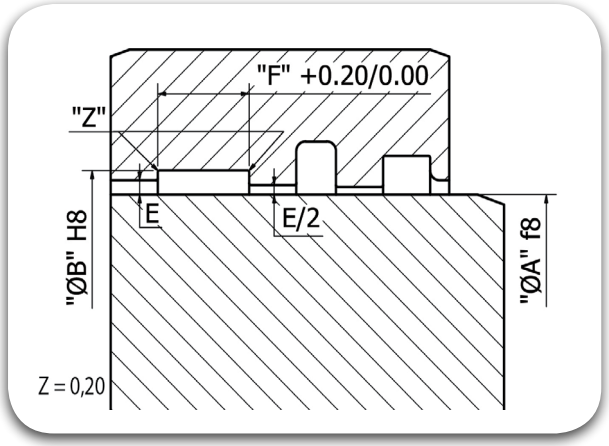

105.00

Part No	TRR 1050 1100 150					
Groove Dimension	ØA	x	ØB	x	F	
	105.00		110.00		15.00	

110.00

Part No	TRR 1100 1150 097					
Groove Dimension	ØA	x	ØB	x	F	
	110.00		115.00		9.70	

110.00

Part No	TRR 1110 1150 150					
Groove Dimension	ØA	x	ØB	x	F	
	110.00		115.00		15.00	

115.00

Part No	TRR 1150 1200 097					
Groove Dimension	ØA	x	ØB	x	F	
	115.00		120.00		9.70	

115.00

Part No	TRR 1150 1200 150					
Groove Dimension	ØA	x	ØB	x	F	
	115.00		120.00		15.00	

120.00

Part No	TRR 1200 1250 056					
Groove Dimension	ØA	x	ØB	x	F	
	120.00		125.00		5.60	

120.00

Part No	TRR 1200 1250 097					
Groove Dimension	ØA	x	ØB	x	F	
	120.00		125.00		9.70	

120.00

Part No	TRR 1200 1250 150					
Groove Dimension	ØA	x	ØB	x	F	
	120.00		125.00		15.00	

125.00

Part No	TRR 1250 1300 097					
Groove Dimension	ØA	x	ØB	x	F	
	125.00		130.00		9.70	

125.00

Part No	TRR 1250 1300 150					
Groove Dimension	ØA	x	ØB	x	F	
	125.00		130.00		15.00	

130.00

Part No	TRR 1300 1350 150					
Groove Dimension	ØA	x	ØB	x	F	
	130.00		135.00		15.00	

135.00

Part No	TRR 1350 1400 150					
Groove Dimension	ØA	x	ØB	x	F	
	135.00		140.00		15.00	

140.00

Part No	TRR 1400 1450 097					
Groove Dimension	ØA	x	ØB	x	F	
	140.00		145.00		9.70	

140.00

Part No	TRR 1400 1450 150					
Groove Dimension	ØA	x	ØB	x	F	
	140.00		145.00		15.00	

150.00

Part No	TRR 1500 1550 150					
Groove Dimension	ØA	x	ØB	x	F	
	150.00		155.00		15.00	

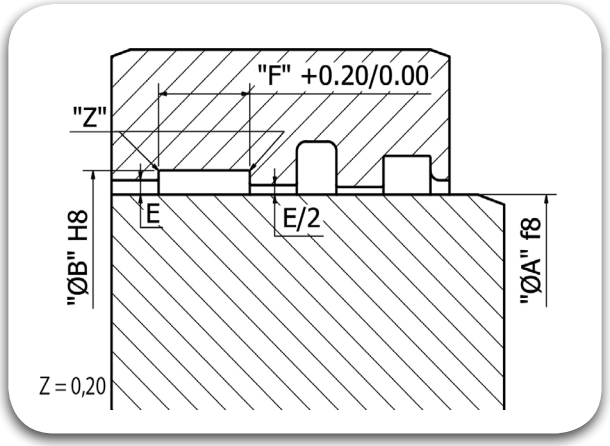

155.00

Part No	TRR 1550 1600 150					
Groove Dimension	ØA	x	ØB	x	F	
	155.00		160.00		15.00	

160.00

Part No	TRR 1600 1650 097					
Groove Dimension	ØA	x	ØB	x	F	
	160.00		165.00		9.70	

160.00

Part No	TRR 1600 1650 150					
Groove Dimension	ØA	x	ØB	x	F	
	160.00		165.00		15.00	

170.00

Part No	TRR 1700 1750 150					
Groove Dimension	ØA	x	ØB	x	F	
	170.00		175.00		15.00	

180.00

Part No	TRR 1800 1850 097					
Groove Dimension	ØA	x	ØB	x	F	
	180.00		185.00		9.70	

180.00

Part No	TRR 1800 1850 150					
Groove Dimension	ØA	x	ØB	x	F	
	180.00		185.00		15.00	

190.00

Part No	TRR 1900 1950 150					
Groove Dimension	ØA	x	ØB	x	F	
	190.00		195.00		15.00	

195.00

Part No	TRR 1950 2000 150					
Groove Dimension	ØA	x	ØB	x	F	
	195.00		200.00		15.00	

200.00

Part No	TRR 2000 2050 150					
Groove Dimension	ØA	x	ØB	x	F	
	200.00		205.00		15.00	

200.00

Part No	TRR 2000 2050 250					
Groove Dimension	ØA	x	ØB	x	F	
	200.00		205.00		25.00	

210.00

Part No	TRR 2100 2150 150					
Groove Dimension	ØA	x	ØB	x	F	
	210.00		215.00		15.00	

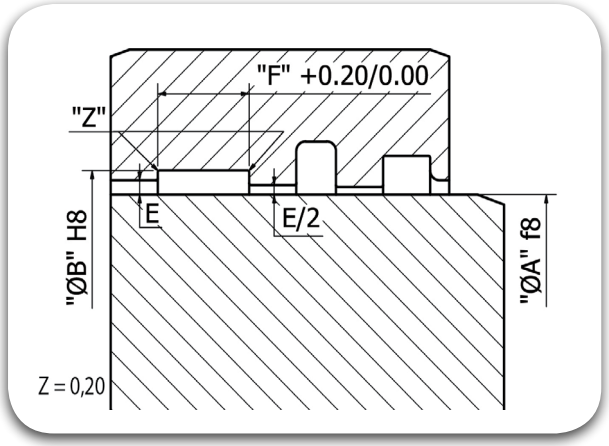

220.00

Part No	TRR 2200 2250 150				
Groove Dimension	ØA	x	ØB	x	F
	220.00		225.00		15.00

220.00

Part No	TRR 2200 2250 250				
Groove Dimension	ØA	x	ØB	x	F
	220.00		225.00		25.00

230.00

Part No	TRR 2300 2350 250				
Groove Dimension	ØA	x	ØB	x	F
	230.00		235.00		25.00

240.00

Part No	TRR 2400 2450 250				
Groove Dimension	ØA	x	ØB	x	F
	240.00		245.00		25.00

250.00

Part No	TRR 2500 2550 150				
Groove Dimension	ØA	x	ØB	x	F
	250.00		255.00		15.00

250.00

Part No	TRR 2500 2550 250				
Groove Dimension	ØA	x	ØB	x	F
	250.00		255.00		25.00

280.00

Part No	TRR 2800 2850 150				
Groove Dimension	ØA	x	ØB	x	F
	280.00		285.00		15.00

280.00

Part No	TRR 2800 2850 250				
Groove Dimension	ØA	x	ØB	x	F
	280.00		285.00		25.00

280.00

Part No	TRR 2800 2880 250				
Groove Dimension	ØA	x	ØB	x	F
	280.00		288.00		25.00

300.00

Part No	TRR 3000 3050 250				
Groove Dimension	ØA	x	ØB	x	F
	300.00		305.00		25.00

320.00

Part No	TRR 3200 3250 150				
Groove Dimension	ØA	x	ØB	x	F
	320.00		325.00		15.00

320.00

Part No	TRR 3200 3250 250				
Groove Dimension	ØA	x	ØB	x	F
	320.00		325.00		25.00

320.00

Part No	TRR 3200 3280 250				
Groove Dimension	ØA	x	ØB	x	F
	320.00		328.00		25.00

350.00

Part No	TRR 3500 3550 250					
Groove Dimension	ØA	x	ØB	x	F	
	350.00		355.00		25.00	

360.00

Part No	TRR 3600 3650 150					
Groove Dimension	ØA	x	ØB	x	F	
	360.00		365.00		15.00	

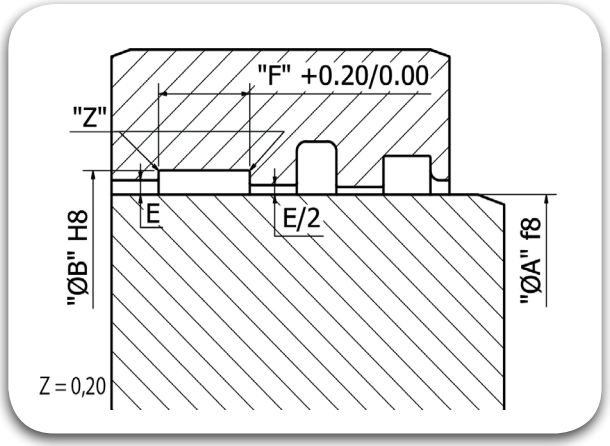

360.00

Part No	TRR 3600 3650 250					
Groove Dimension	ØA	x	ØB	x	F	
	360.00		365.00		25.00	

360.00

Part No	TRR 3600 3680 250					
Groove Dimension	ØA	x	ØB	x	F	
	360.00		368.00		25.00	

400.00

Part No	TRR 4000 4050 250					
Groove Dimension	ØA	x	ØB	x	F	
	400.00		405.00		25.00	

400.00

Part No	TRR 4000 4080 250					
Groove Dimension	ØA	x	ØB	x	F	
	400.00		408.00		25.00	

800.00

Part No	TRR 8000 8050 250					
Groove Dimension	ØA	x	ØB	x	F	
	800.00		805.00		25.00	

800.00

Part No	TRR 8000 8080 250					
Groove Dimension	ØA	x	ØB	x	F	
	800.00		808.00		25.00	

TRIADA
TECHNOLOGIES

Rotary Seals
Triada Sealing Guide

#Sealing**Excellence**

TRIADA

Important Information

Utmost care has been taken in the preparation and completion of this guide, but still it is not guaranteed that this is devoid of any typographical or inadvertent errors or omissions. Hence, Triada shall not be responsible for the end user's reliance on such errors or omissions. Information or data in this guide which includes and not limited to product profiles, product features, specifications etc. may be amended or modified at the sole discretion of Triada Technologies India Pvt. Ltd. (TTIPL) without any notice or prior intimation.

TTIPL strongly urge its customers and associates to validate the products that are being offered, to ensure its suitability and performance, based on their applications, hardware & operating conditions, through their own analysis and testing.

DOC. NO.: TT/AE/CAT/FE/03-2023

Table of Content

1 Introduction to Rotary Seals

01 SS3 F01 - F44

02 SD3 F45 - F77

03 SRG F79 - F88

04 SPG F87 - F94

05 SAS F95 - F99

06 SAB F101 - F105

07 SR1 F107 - F112

08 SR2 F113 - F117

09 SDO F119 - F129

10 SDM F131 - F135

11 SAV F137 - F144

12 SV1 F145 - F149

13 SV2 F151 - F159

14 SV3 F161 - F169

15 SV4 F171 - F187

16 SV5 F189 - F205

17 SV6 F207 - F215

Introduction to Rotary Seals

Rotary Seals

Category of Rotary Seals, mostly points to Radial Shaft Seals or is more commonly known as Rotary Oil Seals. Rotary or Radial Shaft Seals is a key element in the Rotary Actuators, which over a period of time, have seen a major technological change in its operational capabilities. Higher Speeds, Higher pressures and longer life- the three major focus areas driving the technological advancement for these seals.

Rotary Seals, unlike the Linear Seals, poses a major challenge in the way the hardware is to be prepared, as it has a mating surface, mostly a line contact, which is practically the same throughout its operational life (for seals other than Mechanical face Seals). So, the machining of this thin contact area is very critical both in terms of finishing process as well as the hardness. A softer material shall lead to grooving on the shaft, whereas an improper surface texture shall lead to wearing of the Sealing lip.

Rotary Shaft Seals, particularly the larger diameter seals as those used in Windmills, Steel Plants, and Cement Plants etc. can also be supplied in a split form, so as to ease the assembly process, without asking for complete dismantling of the entire assembly. Please do contact Triada Technologies for further information in this regard.

From the earlier Elastomer based Sealing Lips, PTFE Lipped Seals have evolved, either the lips seal the media by the effect of a lay on the shaft or as is common, with a line contact lip, energized by a suitable spring. These Seals are preferred when working with difficult media beyond the capability of Elastomers, or where high surface speeds (or high PV) are involved or sometimes where temperatures are much higher than that serviceable by FKM.

Mechanical Face Seals, unlike other Rotary Seals (excluding Cassette Seals), owns the responsibility of Sealing within the seal itself, utilizing the especially finished metallic mating faces. In the case of Cassette Seals, the Sealing Lips rub against hardened and ground sleeve, which thus takes the responsibility off from Customers in preparing the right hardware or in other words the shafts could be left soft.

Triada do have PTFE Rotary Seals, energized by an elastomer, which finds its application in Spindles, Turntables, and Swivel Joints etc. These are again available in two versions, either for Internal Sealing or for External Sealing. It is advised to consult Triada Application Engineering team on your application, who would be pleased to propose the best possible seal from the standard range or may be design a special seal, to suit your requirements..

Rotary Seals

SS3

TRIADA
TECHNOLOGIES

#SealingExcellence

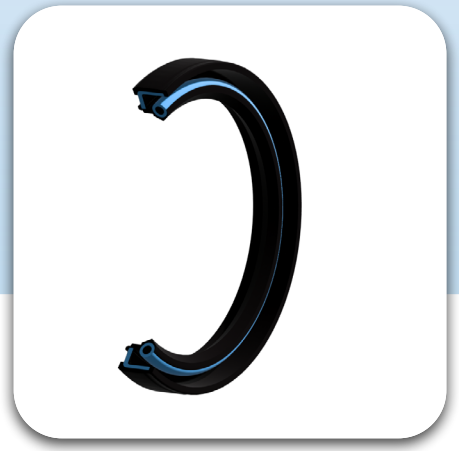




Description

The SS3 type is a single lip rotary shaft seal with a metallic ring reinforcement and sheathed by the rubber on outer diameter. The primary lip is used for sealing the medium. The inside metal may be of carbon steel or stainless steeldepending on the application, media, cycle speed etc., the rubber compound is selected considering the media compatibility, temperature, surface speed etc..

Diameter Range	Ø4.00 – Ø2500.00 (Larger dia. on request)
Standard material	TRIAFLEX® T576(NBR)
Temperature(°C)	-40ºC to 200ºC (Based on Elastomer Material).
Speed	<10.00 m/s
Fluids	Hydraulic fluids (Mineral Oil based), Water, Air etc, depending on Seal Compounds selected. Conditions).

Material Details

Seal Material	Seal Material Code
TRIAFLEX® NBR 75	T576
TRIAFLEX® FKM 75	T676

Nomenclature

Part No	SS3	12500	15000	1200	T579
	Seal profile	Rod Dia x 100	Groove Dia x 100	Groove Width x 100	Seal Material Code

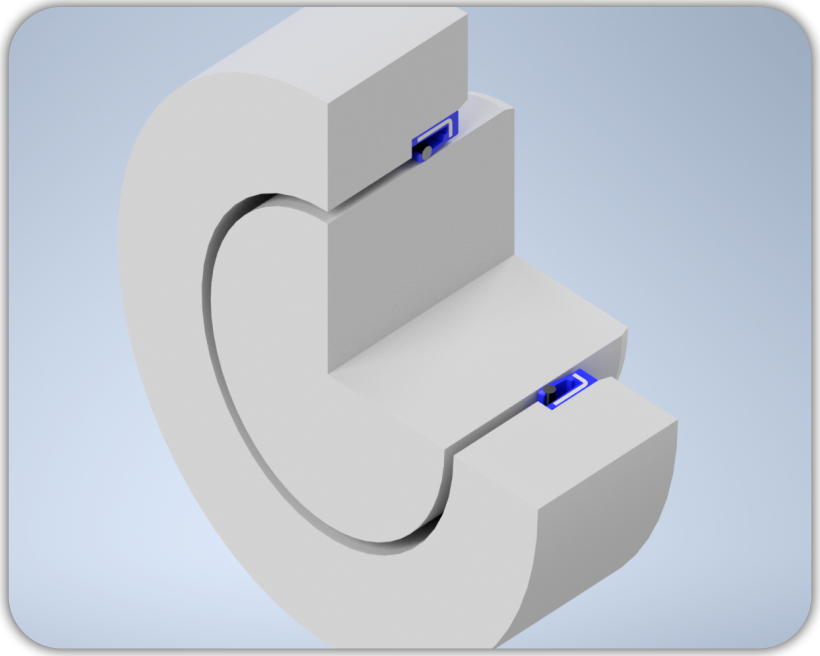

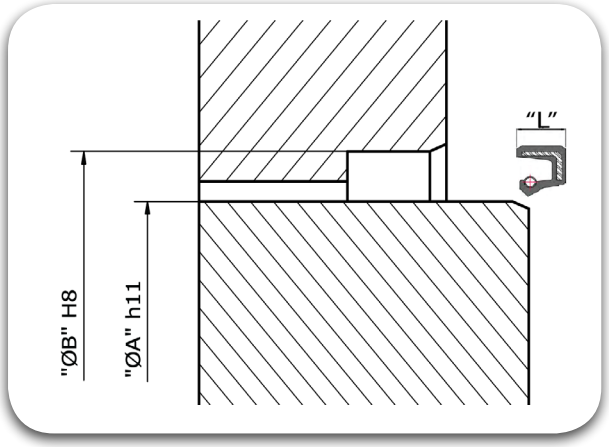

4.00

Part No	SS300400 01100 0500				
Groove Dimension	ØA	x	ØB	x	L
	4.00		11.00		5.00

4.00

Part No	SS300400 01200 0600				
Groove Dimension	ØA	x	ØB	x	L
	4.00		12.00		6.00

5.00

Part No	SS300500 01500 0600				
Groove Dimension	ØA	x	ØB	x	L
	5.00		15.00		6.00

6.00

Part No	SS300600 01200 0550				
Groove Dimension	ØA	x	ØB	x	L
	6.00		12.00		5.50

6.00

Part No	SS300600 01500 0400				
Groove Dimension	ØA	x	ØB	x	L
	6.00		15.00		4.00

6.00

Part No	SS300600 01600 0500				
Groove Dimension	ØA	x	ØB	x	L
	6.00		16.00		5.00

6.00

Part No	SS300600 01600 0700				
Groove Dimension	ØA	x	ØB	x	L
	6.00		16.00		7.00

6.00

Part No	SS300600 01900 0700				
Groove Dimension	ØA	x	ØB	x	L
	6.00		19.00		7.00

6.00

Part No	SS300600 02200 0700				
Groove Dimension	ØA	x	ØB	x	L
	6.00		22.00		7.00

6.00

Part No	SS300600 02200 0800				
Groove Dimension	ØA	x	ØB	x	L
	6.00		22.00		8.00

7.00

Part No	SS300700 01600 0700				
Groove Dimension	ØA	x	ØB	x	L
	7.00		16.00		7.00

7.00

Part No	SS300700 02200 0700				
Groove Dimension	ØA	x	ØB	x	L
	7.00		22.00		7.00

8.00

Part No	SS300800 01400 0400				
Groove Dimension	ØA	x	ØB	x	L
	8.00		14.00		4.00

8.00

Part No	SS300800 01600 0500		
Groove Dimension	ØA	ØB	L
	8.00	16.00	5.00

8.00

Part No	SS300800 01600 0700		
Groove Dimension	ØA	ØB	L
	8.00	16.00	7.00

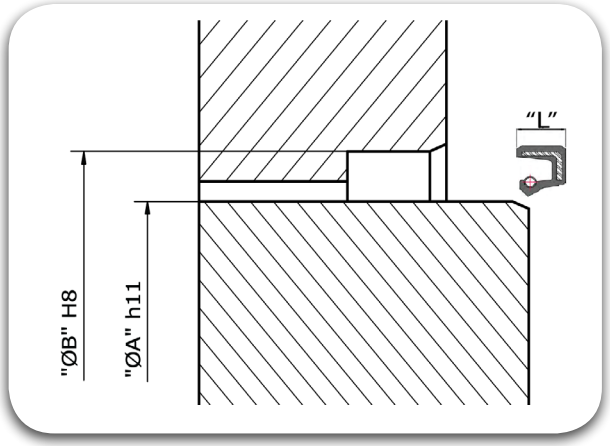

8.00

Part No	SS300800 01800 0500		
Groove Dimension	ØA	ØB	L
	8.00	18.00	5.00

8.00

Part No	SS300800 02200 0400		
Groove Dimension	ØA	ØB	L
	8.00	22.00	4.00

8.00

Part No	SS300800 02200 0700		
Groove Dimension	ØA	ØB	L
	8.00	22.00	7.00

8.00

Part No	SS300800 02200 0800		
Groove Dimension	ØA	ØB	L
	8.00	22.00	8.00

8.00

Part No	SS300800 02400 0700		
Groove Dimension	ØA	ØB	L
	8.00	24.00	7.00

8.50

Part No	SS300850 01800 0700		
Groove Dimension	ØA	ØB	L
	8.50	18.00	7.00

9.00

Part No	SS300900 02200 0700		
Groove Dimension	ØA	ØB	L
	9.00	22.00	7.00

9.00

Part No	SS300900 02400 0700		
Groove Dimension	ØA	ØB	L
	9.00	24.00	7.00

9.00

Part No	SS300900 02600 0700		
Groove Dimension	ØA	ØB	L
	9.00	26.00	7.00

9.00

Part No	SS300900 03000 0700		
Groove Dimension	ØA	ØB	L
	9.00	30.00	7.00

10.00

Part No	SS301000 01600 0400		
Groove Dimension	ØA	ØB	L
	10.00	16.00	4.00

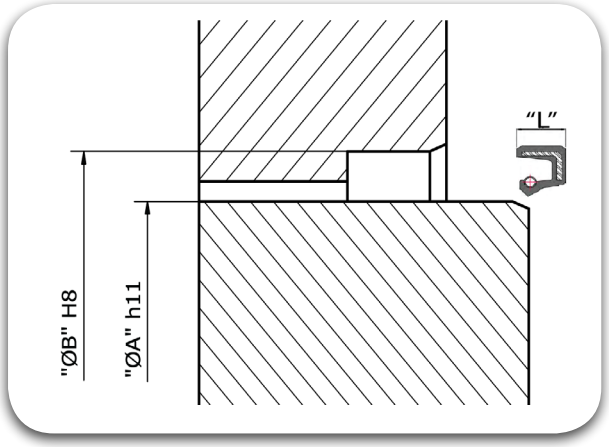

		ØA		ØB		L
10.00	Part No: SS301000 01800 0400	10.00	x	18.00	x	4.00
10.00	Part No: SS301000 01800 0600	10.00	x	18.00	x	6.00
10.00	Part No: SS301000 01900 0700	10.00	x	19.00	x	7.00
10.00	Part No: SS301000 02200 0700	10.00	x	22.00	x	7.00
10.00	Part No: SS301000 02400 0700	10.00	x	24.00	x	7.00
10.00	Part No: SS301000 02500 0800	10.00	x	25.00	x	8.00
10.00	Part No: SS301000 02600 0700	10.00	x	26.00	x	7.00
10.00	Part No: SS301000 02800 0700	10.00	x	28.00	x	7.00
11.00	Part No: SS301100 01700 0400	11.00	x	17.00	x	4.00
11.00	Part No: SS301100 01900 0700	11.00	x	19.00	x	7.00
11.00	Part No: SS301100 02200 0700	11.00	x	22.00	x	7.00
11.00	Part No: SS301100 02600 0700	11.00	x	26.00	x	7.00
11.00	Part No: SS301100 03000 0700	11.00	x	30.00	x	7.00

11.50

Part No	SS301150 02200 0500		
Groove Dimension	ØA	ØB	L
	11.50	22.00	5.00

12.00

Part No	SS301200 01900 0500		
Groove Dimension	ØA	ØB	L
	12.00	19.00	5.00

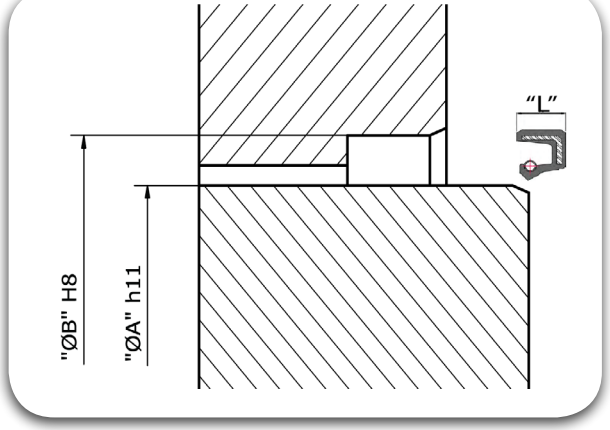

12.00

Part No	SS301200 02000 0400		
Groove Dimension	ØA	ØB	L
	12.00	20.00	4.00

12.00

Part No	SS301200 02000 0500		
Groove Dimension	ØA	ØB	L
	12.00	20.00	5.00

12.00

Part No	SS301200 02200 0400		
Groove Dimension	ØA	ØB	L
	12.00	22.00	4.00

12.00

Part No	SS301200 02200 0700		
Groove Dimension	ØA	ØB	L
	12.00	22.00	7.00

12.00

Part No	SS301200 02400 0700		
Groove Dimension	ØA	ØB	L
	12.00	24.00	7.00

12.00

Part No	SS301200 02500 0500		
Groove Dimension	ØA	ØB	L
	12.00	25.00	5.00

12.00

Part No	SS301200 02500 0800		
Groove Dimension	ØA	ØB	L
	12.00	25.00	8.00

12.00

Part No	SS301200 02600 0700		
Groove Dimension	ØA	ØB	L
	12.00	26.00	7.00

12.00

Part No	SS301200 02600 0800		
Groove Dimension	ØA	ØB	L
	12.00	26.00	8.00

12.00

Part No	SS301200 02800 0700		
Groove Dimension	ØA	ØB	L
	12.00	28.00	7.00

12.00

Part No	SS301200 03000 0700		
Groove Dimension	ØA	ØB	L
	12.00	28.00	7.00

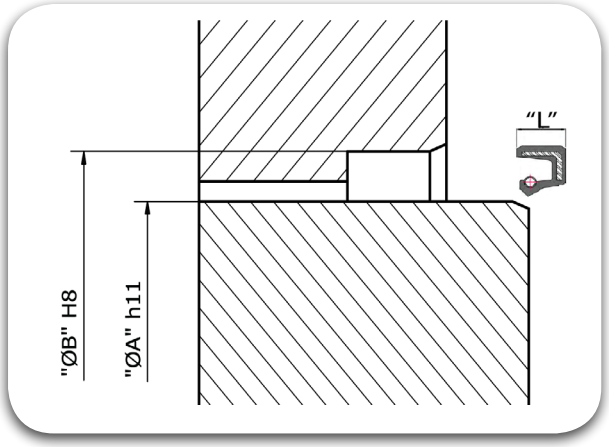

12.00		ØA		ØB		L
Part No	SS301200 03000 1000					
Groove Dimension		12.00	x	30.00	x	10.00

12.00		ØA		ØB		L
Part No	SS301200 03200 0700					
Groove Dimension		12.00	x	32.00	x	7.00

12.00		ØA		ØB		L
Part No	SS301200 03200 1000					
Groove Dimension		12.00	x	32.00	x	10.00

12.00		ØA		ØB		L
Part No	SS301200 03700 1000					
Groove Dimension		12.00	x	37.00	x	10.00

12.00		ØA		ØB		L
Part No	SS301200 04500 0700					
Groove Dimension		12.00	x	45.00	x	7.00

13.00		ØA		ØB		L
Part No	SS301300 02500 0500					
Groove Dimension		13.00	x	25.00	x	5.00

13.00		ØA		ØB		L
Part No	SS301300 02600 0700					
Groove Dimension		13.00	x	26.00	x	7.00

13.00		ØA		ØB		L
Part No	SS301300 03000 0800					
Groove Dimension		13.00	x	30.00	x	8.00

14.00		ØA		ØB		L
Part No	SS301400 02200 0400					
Groove Dimension		14.00	x	22.00	x	4.00

4.00		ØA		ØB		L
Part No	SS301400 02200 0700					
Groove Dimension		4.00	x	22.00	x	7.00

14.00		ØA		ØB		L
Part No	SS301400 02400 0700					
Groove Dimension		14.00	x	24.00	x	7.00

14.00		ØA		ØB		L
Part No	SS301400 02500 0500					
Groove Dimension		14.00	x	25.00	x	5.00

14.00		ØA		ØB		L
Part No	SS301400 02800 0700					
Groove Dimension		14.00	x	28.00	x	7.00

14.00

Part No	SS301400 02850 0630				
Groove Dimension	ØA	x	ØB	x	L
	14.00		28.50		6.30

14.00

Part No	SS301400 03000 0700				
Groove Dimension	ØA	x	ØB	x	L
	14.00		30.00		7.00

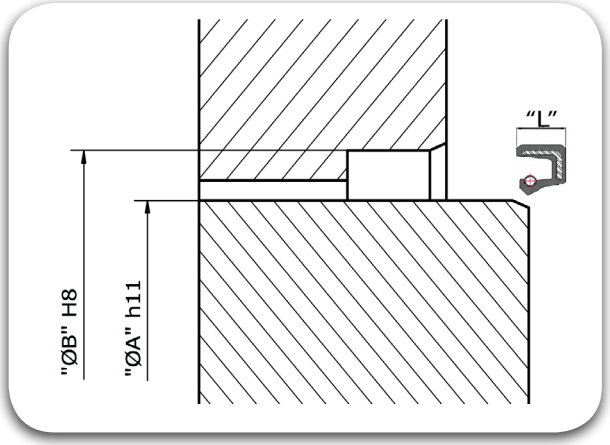

14.00

Part No	SS301400 03500 0700				
Groove Dimension	ØA	x	ØB	x	L
	14.00		35.00		7.00

14.50

Part No	SS301450 02850 0630				
Groove Dimension	ØA	x	ØB	x	L
	14.50		28.50		6.30

15.00

Part No	SS301500 02200 0700				
Groove Dimension	ØA	x	ØB	x	L
	15.00		22.00		7.00

15.00

Part No	SS301500 02400 0500				
Groove Dimension	ØA	x	ØB	x	L
	15.00		24.00		5.00

15.00

Part No	SS301500 02400 0700				
Groove Dimension	ØA	x	ØB	x	L
	15.00		24.00		7.00

15.00

Part No	SS301500 02500 0500				
Groove Dimension	ØA	x	ØB	x	L
	15.00		25.00		5.00

15.00

Part No	SS301500 02600 0600				
Groove Dimension	ØA	x	ØB	x	L
	15.00		26.00		6.00

15.00

Part No	SS301500 02600 0700				
Groove Dimension	ØA	x	ØB	x	L
	15.00		26.00		7.00

15.00

Part No	SS301500 02600 0500				
Groove Dimension	ØA	x	ØB	x	L
	15.00		26.00		5.00

15.00

Part No	SS301500 02800 0700				
Groove Dimension	ØA	x	ØB	x	L
	15.00		28.00		7.00

15.00

Part No	SS301500 03000 0700				
Groove Dimension	ØA	x	ØB	x	L
	15.00		30.00		7.00

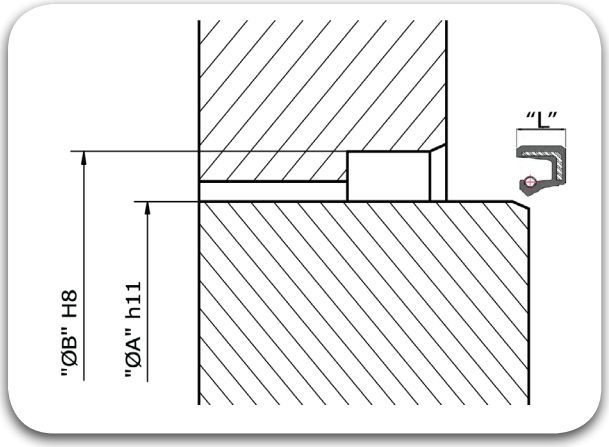

15.00

Part No	SS301500 03000 1000		
Groove Dimension	ØA 15.00	ØB 30.00	L 10.00

15.00

Part No	SS301500 03200 0700		
Groove Dimension	ØA 15.00	ØB 32.00	L 7.00

15.00

Part No	SS301500 03500 0700		
Groove Dimension	ØA 15.00	ØB 35.00	L 7.00

15.00

Part No	SS301500 03500 1000		
Groove Dimension	ØA 15.00	ØB 35.00	L 7.00

15.00

Part No	SS301500 04000 0700		
Groove Dimension	ØA 15.00	ØB 40.00	L 7.00

15.00

Part No	SS301500 04000 1000		
Groove Dimension	ØA 15.00	ØB 40.00	L 10.00

15.00

Part No	SS301500 04200 0700		
Groove Dimension	ØA 15.00	ØB 42.00	L 7.00

15.00

Part No	SS301500 04200 1000		
Groove Dimension	ØA 15.00	ØB 42.00	L 7.00

16.00

Part No	SS301600 02200 0400		
Groove Dimension	ØA 16.00	ØB 22.00	L 4.00

16.00

Part No	SS301600 02400 0400		
Groove Dimension	ØA 16.00	ØB 24.00	L 4.00

16.00

Part No	SS301600 02400 0500		
Groove Dimension	ØA 16.00	ØB 24.00	L 5.00

16.00

Part No	SS301600 02400 0700		
Groove Dimension	ØA 16.00	ØB 24.00	L 7.00

16.00

Part No	SS301600 02600 0700		
Groove Dimension	ØA 16.00	ØB 26.00	L 7.00

16.00

Part No	SS301600 02800 0700		
Groove Dimension	ØA	ØB	L
	16.00	28.00	7.00

16.00

Part No	SS301600 03000 0700		
Groove Dimension	ØA	ØB	L
	16.00	30.00	7.00

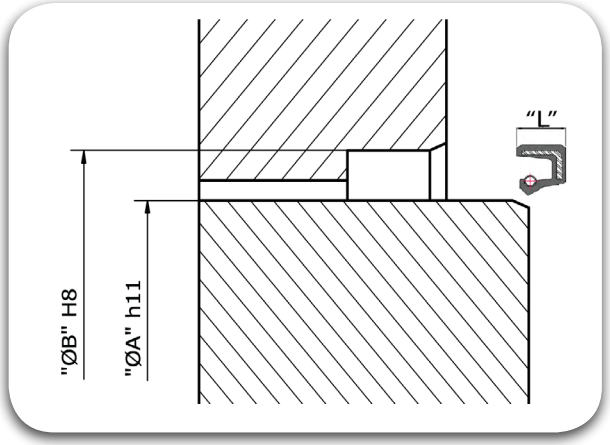

16.00

Part No	SS301600 03000 1000		
Groove Dimension	ØA	ØB	L
	16.00	30.00	10.00

16.00

Part No	SS301600 03200 0700		
Groove Dimension	ØA	ØB	L
	16.00	32.00	7.00

16.00

Part No	SS301600 03500 0700		
Groove Dimension	ØA	ØB	L
	16.00	35.00	7.00

16.00

Part No	SS301600 03500 1000		
Groove Dimension	ØA	ØB	L
	16.00	35.00	10.00

17.00

Part No	SS301700 02500 0400		
Groove Dimension	ØA	ØB	L
	17.00	25.00	4.00

17.00

Part No	SS301700 02600 0600		
Groove Dimension	ØA	ØB	L
	17.00	25.00	4.00

17.00

Part No	SS301700 02800 0500		
Groove Dimension	ØA	ØB	L
	17.00	28.00	5.00

17.00

Part No	SS301700 02800 0600		
Groove Dimension	ØA	ØB	L
	17.00	28.00	6.00

17.00

Part No	SS301700 02800 0700		
Groove Dimension	ØA	ØB	L
	17.00	28.00	7.00

17.00

Part No	SS301700 03000 0700		
Groove Dimension	ØA	ØB	L
	17.00	30.00	7.00

17.00

Part No	SS301700 03200 0700		
Groove Dimension	ØA	ØB	L
	17.00	32.00	7.00

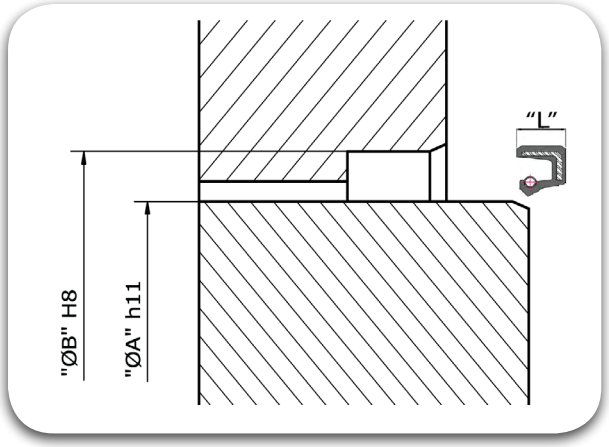

17.00

Part No	SS301700 03200 1000					
Groove Dimension	ØA	x	ØB	x	L	
	17.00		32.00		10.00	

17.00

Part No	SS301700 03500 0500					
Groove Dimension	ØA	x	ØB	x	L	
	17.00		35.00		5.00	

17.00

Part No	SS301700 03500 0700					
Groove Dimension	ØA	x	ØB	x	L	
	17.00		35.00		7.00	

17.00

Part No	SS301700 02500 0800					
Groove Dimension	ØA	x	ØB	x	L	
	17.00		25.00		8.00	

17.00

Part No	SS301700 04000 0700					
Groove Dimension	ØA	x	ØB	x	L	
	17.00		25.00		8.00	

17.00

Part No	SS301700 04000 1000					
Groove Dimension	ØA	x	ØB	x	L	
	17.00		40.00		10.00	

17.00

Part No	SS301700 04700 0700					
Groove Dimension	ØA	x	ØB	x	L	
	17.00		47.00		7.00	

17.00

Part No	SS301700 04700 1000					
Groove Dimension	ØA	x	ØB	x	L	
	17.00		47.00		10.00	

18.00

Part No	SS301800 02400 0400					
Groove Dimension	ØA	x	ØB	x	L	
	18.00		24.00		4.00	

18.00

Part No	SS301800 02800 0700					
Groove Dimension	ØA	x	ØB	x	L	
	18.00		28.00		7.00	

18.00

Part No	SS301800 03000 0700					
Groove Dimension	ØA	x	ØB	x	L	
	18.00		30.00		7.00	

18.00

Part No	SS301800 03200 0700					
Groove Dimension	ØA	x	ØB	x	L	
	18.00		32.00		7.00	

18.00

Part No	SS301800 03200 0800					
Groove Dimension	ØA	x	ØB	x	L	
	18.00		32.00		8.00	

18.00

Part No	SS301800 03500 0700		
Groove Dimension	ØA	ØB	L
	18.00	35.00	7.00

18.00

Part No	SS301800 03500 1000		
Groove Dimension	ØA	ØB	L
	18.00	35.00	10.00

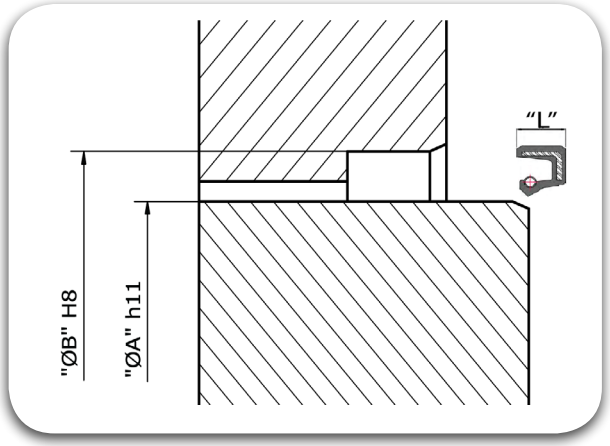

18.00

Part No	SS301800 04000 0700		
Groove Dimension	ØA	ØB	L
	18.00	40.00	7.00

18.00

Part No	SS301800 04000 1000		
Groove Dimension	ØA	ØB	L
	18.00	40.00	10.00

19.00

Part No	SS301900 03200 0700		
Groove Dimension	ØA	ØB	L
	19.00	32.00	7.00

19.00

Part No	SS301900 03500 0700		
Groove Dimension	ØA	ØB	L
	19.00	35.00	7.00

19.00

Part No	SS301900 03500 1000		
Groove Dimension	ØA	ØB	L
	19.00	35.00	10.00

19.00

Part No	SS301900 04000 1000		
Groove Dimension	ØA	ØB	L
	19.00	40.00	10.00

20.00

Part No	SS302000 02800 0600		
Groove Dimension	ØA	ØB	L
	20.00	28.00	6.00

20.00

Part No	SS302000 02800 0700		
Groove Dimension	ØA	ØB	L
	20.00	28.00	7.00

20.00

Part No	SS302000 03000 0500		
Groove Dimension	ØA	ØB	L
	20.00	30.00	5.00

20.00

Part No	SS302000 03000 0800		
Groove Dimension	ØA	ØB	L
	20.00	30.00	8.00

20.00

Part No	SS302000 03200 0700		
Groove Dimension	ØA	ØB	L
	20.00	32.00	7.00

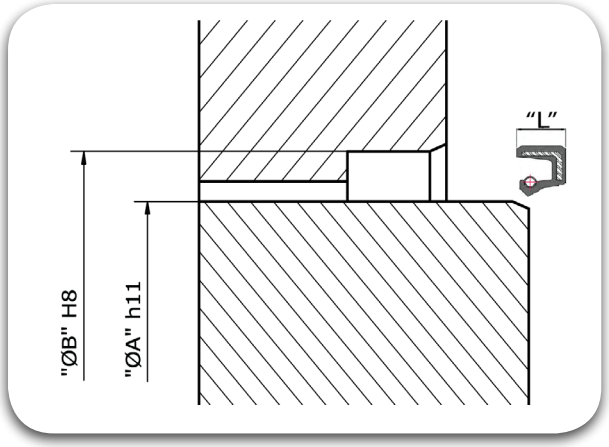

20.00

Part No	SS302000 03500 0500
Groove Dimension	ØA 20.00 x ØB 35.00 x L 5.00

20.00

Part No	SS302000 03500 0600
Groove Dimension	ØA 20.00 x ØB 35.00 x L 6.00

20.00

Part No	SS302000 03500 0620
Groove Dimension	ØA 20.00 x ØB 35.00 x L 6.20

20.00

Part No	SS302000 03500 0700
Groove Dimension	ØA 20.00 x ØB 35.00 x L 7.00

20.00

Part No	SS302000 03500 1000
Groove Dimension	ØA 20.00 x ØB 35.00 x L 10.00

20.00

Part No	SS302000 03700 0700
Groove Dimension	ØA 20.00 x ØB 37.00 x L 7.00

20.00

Part No	SS302000 03700 0800
Groove Dimension	ØA 20.00 x ØB 37.00 x L 8.00

20.00

Part No	SS302000 03800 0700
Groove Dimension	ØA 20.00 x ØB 38.00 x L 7.00

20.00

Part No	SS302000 04000 0700
Groove Dimension	ØA 20.00 x ØB 40.00 x L 7.00

20.00

Part No	SS302000 04000 1000
Groove Dimension	ØA 20.00 x ØB 40.00 x L 10.00

20.00

Part No	SS302000 04200 0700
Groove Dimension	ØA 20.00 x ØB 42.00 x L 7.00

20.00

Part No	SS302000 04200 1000
Groove Dimension	ØA 20.00 x ØB 42.00 x L 10.00

20.00

Part No	SS302000 04700 0600
Groove Dimension	ØA 20.00 x ØB 47.00 x L 6.00

20.00

Part No	SS302000 04700 0700		
Groove Dimension	ØA	ØB	L
	20.00	47.00	7.00

20.00

Part No	SS302000 04700 0950		
Groove Dimension	ØA	ØB	L
	20.00	47.00	9.50

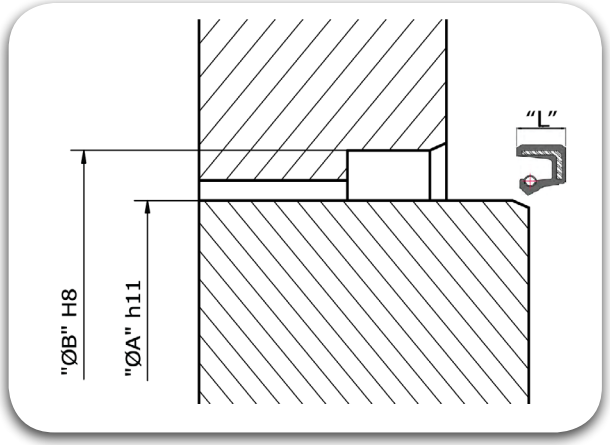

20.00

Part No	SS302000 04700 1000		
Groove Dimension	ØA	ØB	L
	20.00	47.00	10.00

20.00

Part No	SS302000 05200 0700		
Groove Dimension	ØA	ØB	L
	20.00	52.00	7.00

20.00

Part No	SS302000 05200 1000		
Groove Dimension	ØA	ØB	L
	20.00	52.00	10.00

22.00

Part No	SS302200 03000 0700		
Groove Dimension	ØA	ØB	L
	22.00	30.00	7.00

22.00

Part No	SS302200 03200 0400		
Groove Dimension	ØA	ØB	L
	22.00	32.00	4.00

22.00

Part No	SS302200 03200 0700		
Groove Dimension	ØA	ØB	L
	22.00	32.00	7.00

22.00

Part No	SS302200 03500 0500		
Groove Dimension	ØA	ØB	L
	22.00	35.00	5.00

22.00

Part No	SS302200 03500 0600		
Groove Dimension	ØA	ØB	L
	22.00	35.00	6.00

22.00

Part No	SS302200 03500 0700		
Groove Dimension	ØA	ØB	L
	22.00	35.00	7.00

22.00

Part No	SS302200 03500 0800		
Groove Dimension	ØA	ØB	L
	22.00	35.00	8.00

22.00

Part No	SS302200 03500 1000		
Groove Dimension	ØA	ØB	L
	22.00	35.00	10.00

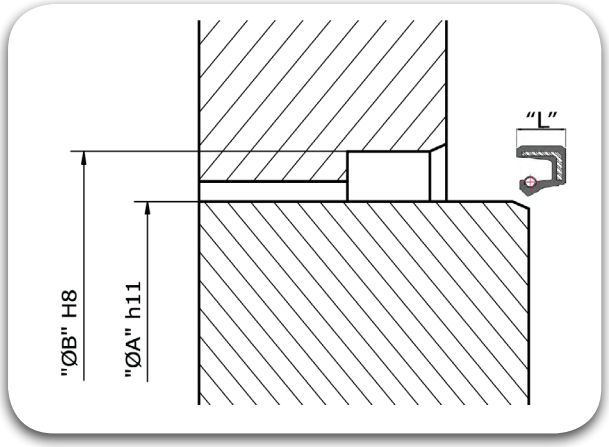

		ØA		ØB		L
22.00	Part No: SS302200 03700 0700	Groove Dimension	22.00	37.00		7.00
22.00	Part No: SS302200 03800 0700	Groove Dimension	22.00	38.00		7.00
22.00	Part No: SS302200 03800 0800	Groove Dimension	22.00	38.00		8.00
22.00	Part No: SS302200 04000 0700	Groove Dimension	22.00	40.00		7.00
22.00	Part No: SS302200 04000 1000	Groove Dimension	22.00	40.00		10.00
22.00	Part No: SS302200 04200 0700	Groove Dimension	22.00	42.00		7.00
22.00	Part No: SS302200 04200 1000	Groove Dimension	22.00	42.00		10.00
22.00	Part No: SS302200 04500 0700	Groove Dimension	22.00	45.00		7.00
22.00	Part No: SS302200 04700 0700	Groove Dimension	22.00	47.00		7.00
22.00	Part No: SS302200 04700 1000	Groove Dimension	22.00	47.00		10.00
22.50	Part No: SS302250 05300 1000	Groove Dimension	22.50	53.00		10.00
23.00	Part No: SS302300 04000 1000	Groove Dimension	23.00	40.00		10.00
23.00	Part No: SS302300 04200 0500	Groove Dimension	23.00	42.00		5.00

23.00

Part No	SS302300 04200 1000					
Groove Dimension	ØA	x	ØB	x	L	
	23.00		42.00		10.00	

24.00

Part No	SS302400 03500 0700					
Groove Dimension	ØA	x	ØB	x	L	
	24.00		35.00		7.00	

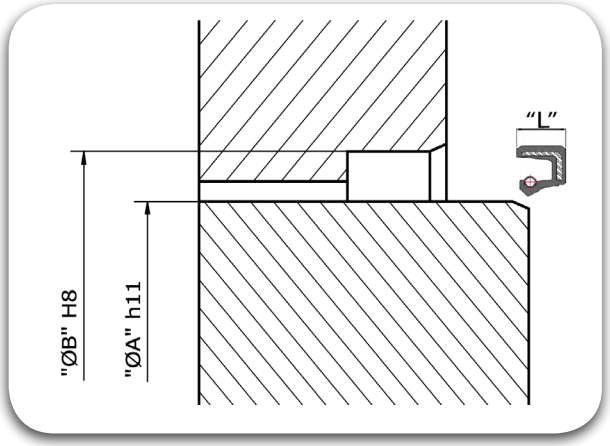

24.00

Part No	SS302400 03700 0700					
Groove Dimension	ØA	x	ØB	x	L	
	24.00		37.00		7.00	

24.00

Part No	SS302400 04000 0700					
Groove Dimension	ØA	x	ØB	x	L	
	24.00		40.00		7.00	

24.00

Part No	SS302400 04200 0800					
Groove Dimension	ØA	x	ØB	x	L	
	24.00		42.00		8.00	

24.00

Part No	SS302400 04200 1000					
Groove Dimension	ØA	x	ØB	x	L	
	24.00		42.00		10.00	

24.00

Part No	SS302400 04700 0700					
Groove Dimension	ØA	x	ØB	x	L	
	24.00		47.00		7.00	

24.00

Part No	SS302400 04700 1000					
Groove Dimension	ØA	x	ØB	x	L	
	24.00		47.00		10.00	

25.00

Part No	SS302500 03200 0600					
Groove Dimension	ØA	x	ØB	x	L	
	25.00		32.00		6.00	

25.00

Part No	SS302500 03300 0600					
Groove Dimension	ØA	x	ØB	x	L	
	25.00		33.00		6.00	

25.00

Part No	SS302500 03500 0500					
Groove Dimension	ØA	x	ØB	x	L	
	25.00		35.00		5.00	

25.00

Part No	SS302500 03500 0700					
Groove Dimension	ØA	x	ØB	x	L	
	25.00		35.00		7.00	

25.00

Part No	SS302500 03600 0600					
Groove Dimension	ØA	x	ØB	x	L	
	25.00		36.00		6.00	

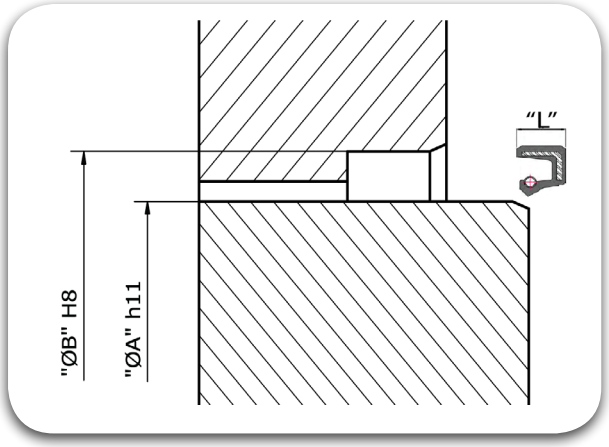

25.00

Part No	SS302500 03700 0500		
Groove Dimension	ØA 25.00	ØB 37.00	L 5.00

25.00

Part No	SS302500 03700 0700		
Groove Dimension	ØA 25.00	ØB 37.00	L 7.00

25.00

Part No	SS302500 03800 0700		
Groove Dimension	ØA 25.00	ØB 38.00	L 7.00

25.00

Part No	SS302500 04000 0500		
Groove Dimension	ØA 25.00	ØB 40.00	L 5.00

25.00

Part No	SS302500 04000 0700		
Groove Dimension	ØA 25.00	ØB 40.00	L 7.00

25.00

Part No	SS302500 04000 0800		
Groove Dimension	ØA 25.00	ØB 40.00	L 8.00

25.00

Part No	SS302500 04000 1000		
Groove Dimension	ØA 25.00	ØB 40.00	L 10.00

25.00

Part No	SS302500 04200 0600		
Groove Dimension	ØA 25.00	ØB 42.00	L 6.00

25.00

Part No	SS302500 04200 0700		
Groove Dimension	ØA 25.00	ØB 42.00	L 7.00

25.00

Part No	SS302500 04200 1000		
Groove Dimension	ØA 25.00	ØB 42.00	L 10.00

25.00

Part No	SS302500 04300 1000		
Groove Dimension	ØA 25.00	ØB 43.00	L 10.00

25.00

Part No	SS302500 04500 0700		
Groove Dimension	ØA 25.00	ØB 45.00	L 7.00

25.00

Part No	SS302500 04500 1000		
Groove Dimension	ØA 25.00	ØB 45.00	L 10.00

25.00

Part No	SS302500 04600 0700		
Groove Dimension	ØA	ØB	L
	25.00	46.00	7.00

25.00

Part No	SS302500 04700 0700		
Groove Dimension	ØA	ØB	L
	25.00	47.00	7.00

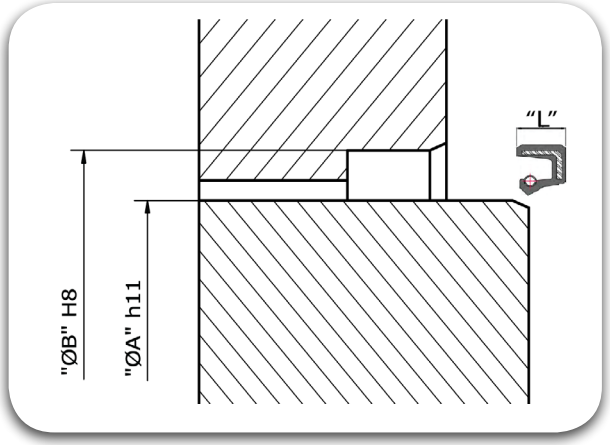

25.00

Part No	SS302500 04700 0800		
Groove Dimension	ØA	ØB	L
	25.00	47.00	8.00

25.00

Part No	SS302500 04700 1000		
Groove Dimension	ØA	ØB	L
	25.00	47.00	10.00

25.00

Part No	SS302500 05000 1000		
Groove Dimension	ØA	ØB	L
	25.00	50.00	10.00

25.00

Part No	SS302500 05200 0700		
Groove Dimension	ØA	ØB	L
	25.00	52.00	7.00

25.00

Part No	SS302500 05200 0800		
Groove Dimension	ØA	ØB	L
	25.00	52.00	8.00

25.00

Part No	SS302500 05200 1000		
Groove Dimension	ØA	ØB	L
	25.00	52.00	10.00

25.00

Part No	SS302500 06200 0700		
Groove Dimension	ØA	ØB	L
	25.00	62.00	7.00

25.00

Part No	SS302500 06200 0800		
Groove Dimension	ØA	ØB	L
	25.00	62.00	8.00

25.00

Part No	SS302500 06200 1000		
Groove Dimension	ØA	ØB	L
	25.00	62.00	10.00

26.00

Part No	SS302600 03400 0400		
Groove Dimension	ØA	ØB	L
	26.00	34.00	4.00

26.00

Part No	SS302600 03700 0700		
Groove Dimension	ØA	ØB	L
	26.00	37.00	7.00

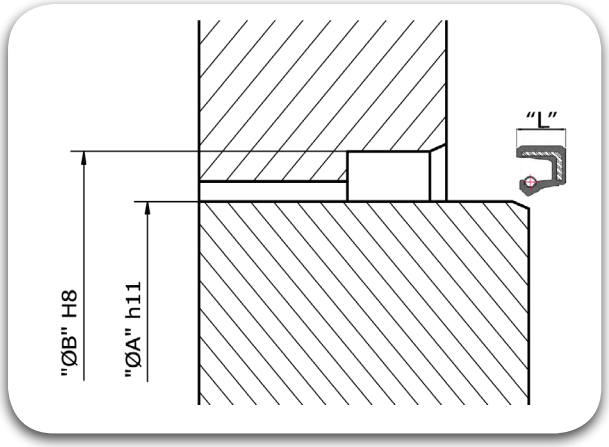

	Part No	Groove Dimension ØA	ØB	L
26.00	SS302600 04200 0700	26.00	42.00	7.00
26.00	SS302600 04700 0700	26.00	47.00	7.00
26.00	SS302600 04700 1000	26.00	47.00	10.00
27.00	SS302700 03700 0700	27.00	37.00	7.00
27.00	SS302700 04200 1000	27.00	42.00	10.00
27.00	SS302700 04700 1000	27.00	47.00	10.00
27.00	SS302700 05000 0800	27.00	50.00	8.00
28.00	SS302800 03800 0700	28.00	38.00	7.00
28.00	SS302800 04000 0700	28.00	40.00	7.00
28.00	SS302800 04200 0800	28.00	42.00	8.00
28.00	SS302800 04200 1000	28.00	42.00	10.00
28.00	SS302800 04250 0800	28.00	42.50	8.00
28.00	SS302800 04300 1000	28.00	43.00	10.00

28.00

Part No	SS302800 04500 0800		
Groove Dimension	ØA	ØB	L
	28.00	45.00	8.00

28.00

Part No	SS302800 04700 0700		
Groove Dimension	ØA	ØB	L
	28.00	47.00	7.00

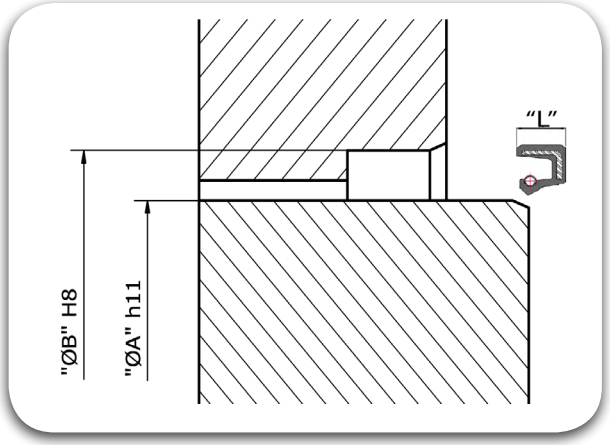

28.00

Part No	SS302800 04700 1000		
Groove Dimension	ØA	ØB	L
	28.00	47.00	10.00

28.00

Part No	SS302800 04800 1000		
Groove Dimension	ØA	ØB	L
	28.00	47.00	10.00

28.00

Part No	SS302800 05000 1000		
Groove Dimension	ØA	ØB	L
	28.00	50.00	10.00

28.00

Part No	SS302800 05200 0700		
Groove Dimension	ØA	ØB	L
	28.00	52.00	7.00

28.00

Part No	SS302800 05200 1000		
Groove Dimension	ØA	ØB	L
	28.00	52.00	10.00

29.00

Part No	SS302900 05000 1000		
Groove Dimension	ØA	ØB	L
	29.00	50.00	10.00

30.00

Part No	SS303000 04000 0700		
Groove Dimension	ØA	ØB	L
	30.00	40.00	7.00

30.00

Part No	SS303000 04000 0800		
Groove Dimension	ØA	ØB	L
	30.00	40.00	8.00

30.00

Part No	SS303000 04000 1000		
Groove Dimension	ØA	ØB	L
	30.00	40.00	10.00

35.00

Part No	SS303500 08000 1000		
Groove Dimension	ØA	ØB	L
	35.00	80.00	10.00

35.00

Part No	SS303500 08000 1300		
Groove Dimension	ØA	ØB	L
	35.00	80.00	13.00

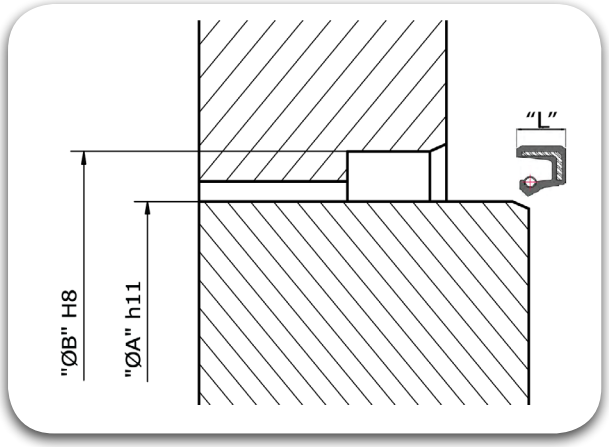

36.00

Part No	SS303600 04700 0700		
Groove Dimension	ØA	ØB	L
	36.00	47.00	7.00

36.00

Part No	SS303600 05000 0700		
Groove Dimension	ØA	ØB	L
	36.00	50.00	7.00

36.00

Part No	SS303600 05200 0700		
Groove Dimension	ØA	ØB	L
	36.00	52.00	7.00

36.00

Part No	SS303600 05600 1000		
Groove Dimension	ØA	ØB	L
	36.00	56.00	10.00

36.00

Part No	SS303600 05800 1200		
Groove Dimension	ØA	ØB	L
	36.00	58.00	12.00

36.00

Part No	SS303600 06200 0700		
Groove Dimension	ØA	ØB	L
	36.00	62.00	7.00

36.00

Part No	SS303600 06200 1000		
Groove Dimension	ØA	ØB	L
	36.00	62.00	10.00

37.00

Part No	SS303700 04750 0500		
Groove Dimension	ØA	ØB	L
	37.00	47.50	5.00

37.00

Part No	SS303700 05200 0800		
Groove Dimension	ØA	ØB	L
	37.00	52.00	8.00

37.00

Part No	SS303700 05200 1000		
Groove Dimension	ØA	ØB	L
	37.00	52.00	10.00

37.00

Part No	SS303700 08000 1200		
Groove Dimension	ØA	ØB	L
	37.00	80.00	12.00

38.00

Part No	SS303800 05000 0700		
Groove Dimension	ØA	ØB	L
	38.00	50.00	7.00

38.00

Part No	SS303800 05200 0700		
Groove Dimension	ØA	ØB	L
	38.00	52.00	7.00

38.00

Part No	SS303800 05200 0800
Groove Dimension	ØA 38.00 x ØB 52.00 x L 8.00

38.00

Part No	SS303800 05200 1000
Groove Dimension	ØA 38.00 x ØB 52.00 x L 10.00

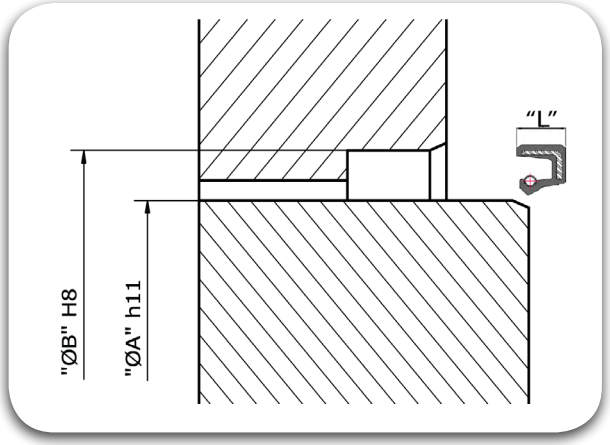

38.00

Part No	SS303800 05400 0650
Groove Dimension	ØA 38.00 x ØB 54.00 x L 6.50

38.00

Part No	SS303800 05400 1000
Groove Dimension	ØA 38.00 x ØB 54.00 x L 10.00

38.00

Part No	SS303800 05500 0700
Groove Dimension	ØA 38.00 x ØB 55.00 x L 7.00

38.00

Part No	SS303800 05500 1000
Groove Dimension	ØA 38.00 x ØB 55.00 x L 10.00

38.00

Part No	SS303800 05600 1000
Groove Dimension	ØA 38.00 x ØB 56.00 x L 10.00

38.00

Part No	SS303800 06000 1000
Groove Dimension	ØA 38.00 x ØB 60.00 x L 10.00

38.00

Part No	SS303800 06200 0700
Groove Dimension	ØA 38.00 x ØB 62.00 x L 7.00

38.00

Part No	SS303800 06200 1000
Groove Dimension	ØA 38.00 x ØB 62.00 x L 10.00

38.00

Part No	SS303800 06500 0800
Groove Dimension	ØA 38.00 x ØB 65.00 x L 8.00

38.00

Part No	SS303800 06800 0800
Groove Dimension	ØA 38.00 x ØB 68.00 x L 8.00

38.00

Part No	SS303800 07000 1000
Groove Dimension	ØA 38.00 x ØB 70.00 x L 10.00

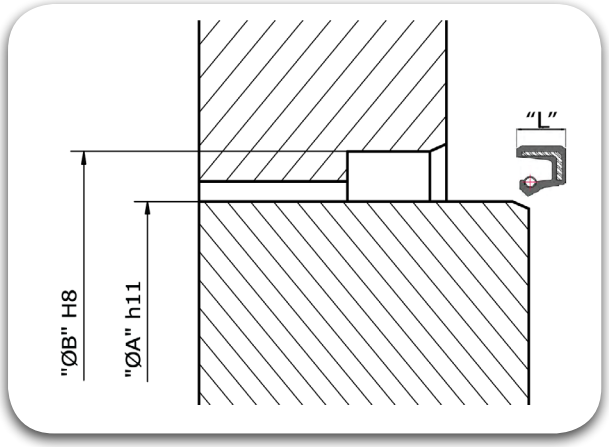

38.00

Part No	SS303800 07200 1000		
Groove Dimension	ØA	ØB	L
	38.00	72.00	10.00

40.00

Part No	SS304000 05000 0800		
Groove Dimension	ØA	ØB	L
	40.00	50.00	8.00

40.00

Part No	SS304000 05200 0600		
Groove Dimension	ØA	ØB	L
	40.00	52.00	6.00

40.00

Part No	SS304000 05200 0700		
Groove Dimension	ØA	ØB	L
	40.00	52.00	7.00

40.00

Part No	SS304000 05200 0800		
Groove Dimension	ØA	ØB	L
	40.00	52.00	8.00

40.00

Part No	SS304000 05200 1000		
Groove Dimension	ØA	ØB	L
	40.00	52.00	10.00

40.00

Part No	SS304000 05500 0700		
Groove Dimension	ØA	ØB	L
	40.00	55.00	7.00

40.00

Part No	SS304000 05500 0800		
Groove Dimension	ØA	ØB	L
	40.00	55.00	8.00

40.00

Part No	SS304000 05500 1000		
Groove Dimension	ØA	ØB	L
	40.00	55.00	10.00

40.00

Part No	SS304000 05600 0800		
Groove Dimension	ØA	ØB	L
	40.00	56.00	8.00

40.00

Part No	SS304000 05600 1000		
Groove Dimension	ØA	ØB	L
	40.00	56.00	10.00

45.00

Part No	SS304500 05500 0700		
Groove Dimension	ØA	ØB	L
	45.00	55.00	7.00

45.00

Part No	SS304500 05800 0700		
Groove Dimension	ØA	ØB	L
	45.00	58.00	7.00

45.00

Part No	SS304500 06000 0700		
Groove Dimension	ØA	ØB	L
	45.00	60.00	7.00

45.00

Part No	SS304500 06200 0700		
Groove Dimension	ØA	ØB	L
	45.00	62.00	7.00

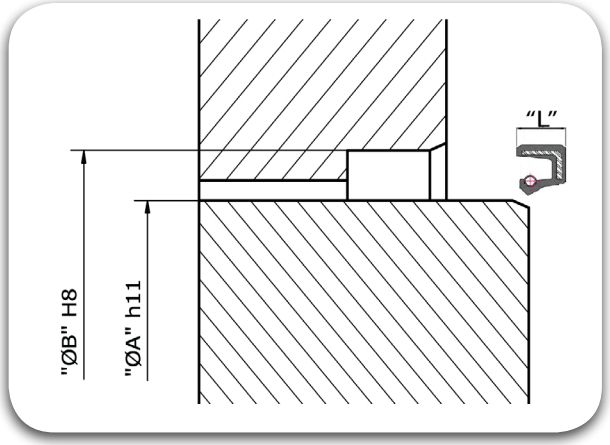

45.00

Part No	SS304500 06000 1000		
Groove Dimension	ØA	ØB	L
	45.00	60.00	10.00

40.00

Part No	SS304000 06200 0700		
Groove Dimension	ØA	ØB	L
	40.00	62.00	7.00

45.00

Part No	SS304500 06200 0800		
Groove Dimension	ØA	ØB	L
	45.00	62.00	8.00

45.00

Part No	SS304500 06200 1000		
Groove Dimension	ØA	ØB	L
	45.00	62.00	10.00

45.00

Part No	SS304500 06200 1200		
Groove Dimension	ØA	ØB	L
	45.00	62.00	12.00

45.00

Part No	SS304500 06500 0800		
Groove Dimension	ØA	ØB	L
	45.00	65.00	8.00

45.00

Part No	SS304500 06500 1000		
Groove Dimension	ØA	ØB	L
	45.00	65.00	10.00

45.00

Part No	SS304500 06800 1000		
Groove Dimension	ØA	ØB	L
	45.00	68.00	10.00

45.00

Part No	SS304500 06800 1200		
Groove Dimension	ØA	ØB	L
	45.00	68.00	12.00

45.00

Part No	SS304500 07000 1000		
Groove Dimension	ØA	ØB	L
	45.00	70.00	10.00

45.00

Part No	SS304500 07200 0700		
Groove Dimension	ØA	ØB	L
	45.00	72.00	7.00

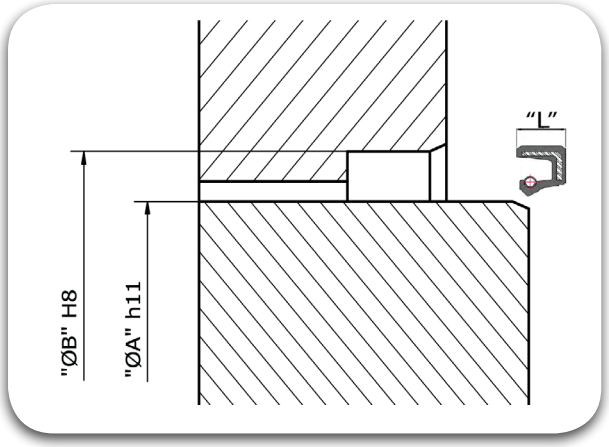

45.00	Part No	SS304500 07200 0800					
	Groove Dimension	ØA	x	ØB	x	L	
		45.00		72.00		8.00	

45.00	Part No	SS304500 07200 1000					
	Groove Dimension	ØA	x	ØB	x	L	
		45.00		72.00		10.00	

45.00	Part No	SS304500 07500 0700					
	Groove Dimension	ØA	x	ØB	x	L	
		45.00		75.00		7.00	

45.00	Part No	SS304500 07500 0700					
	Groove Dimension	ØA	x	ØB	x	L	
		45.00		75.00		7.00	

45.00	Part No	SS304500 07500 0800					
	Groove Dimension	ØA	x	ØB	x	L	
		45.00		75.00		8.00	

45.00	Part No	SS304500 07500 1000					
	Groove Dimension	ØA	x	ØB	x	L	
		45.00		75.00		10.00	

45.00	Part No	SS304500 08000 0800					
	Groove Dimension	ØA	x	ØB	x	L	
		45.00		80.00		8.00	

45.00	Part No	SS304500 08000 1000					
	Groove Dimension	ØA	x	ØB	x	L	
		45.00		80.00		10.00	

45.00	Part No	SS304500 08500 1000					
	Groove Dimension	ØA	x	ØB	x	L	
		45.00		85.00		10.00	

47.00	Part No	SS304700 06200 0600					
	Groove Dimension	ØA	x	ØB	x	L	
		47.00		62.00		6.00	

48.00	Part No	SS304800 06200 0800					
	Groove Dimension	ØA	x	ØB	x	L	
		48.00		62.00		8.00	

48.00	Part No	SS304800 06200 1000					
	Groove Dimension	ØA	x	ØB	x	L	
		48.00		62.00		10.00	

48.00	Part No	SS304800 06500 1000					
	Groove Dimension	ØA	x	ØB	x	L	
		48.00		65.00		10.00	

48.00

Part No	SS304800 06800 1000
Groove Dimension	ØA x ØB x L 48.00 x 68.00 x 10.00

48.00

Part No	SS304800 07200 0800
Groove Dimension	ØA x ØB x L 48.00 x 72.00 x 8.00

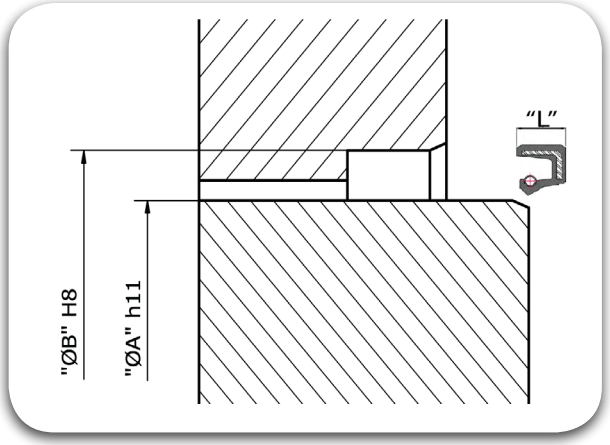

48.00

Part No	SS304800 07200 1000
Groove Dimension	ØA x ØB x L 48.00 x 72.00 x 10.00

48.00

Part No	SS304800 08000 1000
Groove Dimension	ØA x ØB x L 48.00 x 80.00 x 10.00

48.00

Part No	SS304800 09000 1000
Groove Dimension	ØA x ØB x L 48.00 x 90.00 x 10.00

50.00

Part No	SS305000 06000 1000
Groove Dimension	ØA x ØB x L 50.00 x 60.00 x 10.00

50.00

Part No	SS305000 06200 0700
Groove Dimension	ØA x ØB x L 50.00 x 62.00 x 7.00

50.00

Part No	SS305000 06200 1000
Groove Dimension	ØA x ØB x L 50.00 x 62.00 x 10.00

50.00

Part No	SS305000 06500 0800
Groove Dimension	ØA x ØB x L 50.00 x 65.00 x 8.00

50.00

Part No	SS305000 06500 1000
Groove Dimension	ØA x ØB x L 50.00 x 65.00 x 10.00

50.00

Part No	SS305000 06800 0800
Groove Dimension	ØA x ØB x L 50.00 x 68.00 x 8.00

50.00

Part No	SS305000 06800 1000
Groove Dimension	ØA x ØB x L 50.00 x 68.00 x 10.00

50.00

Part No	SS305000 07000 0800
Groove Dimension	ØA x ØB x L 50.00 x 70.00 x 8.00

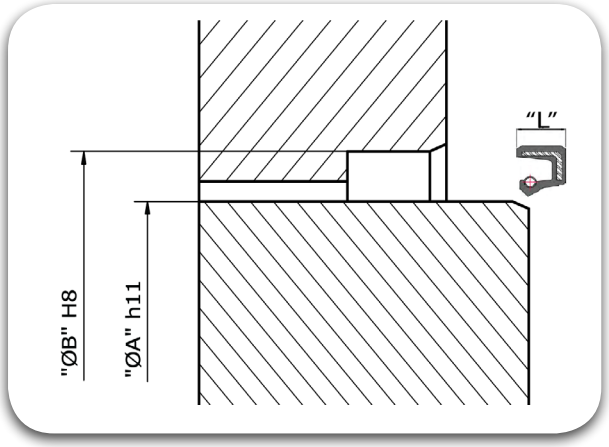

50.00

Part No	SS305000 07000 1000		
Groove Dimension	ØA	ØB	L
	50.00	70.00	10.00

50.00

Part No	SS305000 07000 1200		
Groove Dimension	ØA	ØB	L
	50.00	70.00	12.00

50.00

Part No	SS305000 07200 0600		
Groove Dimension	ØA	ØB	L
	50.00	72.00	6.00

50.00

Part No	SS305000 07200 0800		
Groove Dimension	ØA	ØB	L
	50.00	72.00	8.00

50.00

Part No	SS305000 07200 1000		
Groove Dimension	ØA	ØB	L
	50.00	72.00	10.00

50.00

Part No	SS305000 07400 1000		
Groove Dimension	ØA	ØB	L
	50.00	74.00	10.00

50.00

Part No	SS305000 07500 1000		
Groove Dimension	ØA	ØB	L
	50.00	75.00	10.00

50.00

Part No	SS305000 08000 0800		
Groove Dimension	ØA	ØB	L
	50.00	80.00	8.00

50.00

Part No	SS305000 08000 1000		
Groove Dimension	ØA	ØB	L
	50.00	80.00	10.00

50.00

Part No	SS305000 08000 1300		
Groove Dimension	ØA	ØB	L
	50.00	80.00	13.00

50.00

Part No	SS305000 08500 1000		
Groove Dimension	ØA	ØB	L
	50.00	85.00	10.00

50.00

Part No	SS305000 09000 1000		
Groove Dimension	ØA	ØB	L
	50.00	90.00	10.00

50.00

Part No	SS305000 10000 1000		
Groove Dimension	ØA	ØB	L
	50.00	100.00	10.00

51.00

Part No	SS305100 07200 1000		
Groove Dimension	ØA	ØB	L
	51.00	72.00	10.00

52.00

Part No	SS305200 06500 0800		
Groove Dimension	ØA	ØB	L
	52.00	65.00	8.00

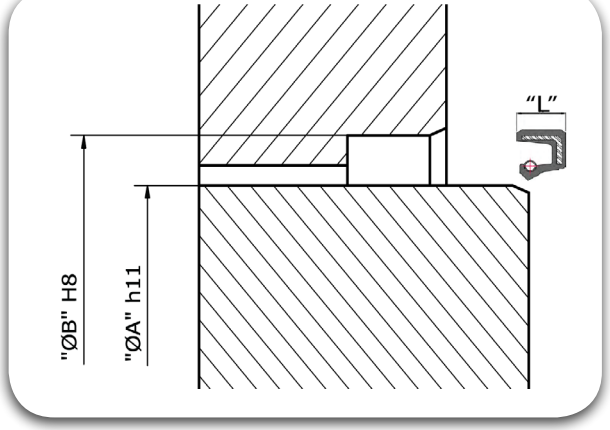

52.00

Part No	SS305200 06800 0800		
Groove Dimension	ØA	ØB	L
	52.00	68.00	8.00

52.00

Part No	SS305200 06800 1000		
Groove Dimension	ØA	ØB	L
	52.00	68.00	10.00

52.00

Part No	SS305200 06900 1000		
Groove Dimension	ØA	ØB	L
	52.00	69.00	10.00

52.00

Part No	SS305200 07200 0800		
Groove Dimension	ØA	ØB	L
	52.00	72.00	8.00

52.00

Part No	SS305200 07200 1000		
Groove Dimension	ØA	ØB	L
	52.00	72.00	10.00

52.00

Part No	SS305200 07500 1200		
Groove Dimension	ØA	ØB	L
	52.00	75.00	12.00

52.00

Part No	SS305200 07620 1000		
Groove Dimension	ØA	ØB	L
	52.00	76.20	10.00

52.00

Part No	SS305200 08000 1000		
Groove Dimension	ØA	ØB	L
	52.00	80.00	10.00

52.00

Part No	SS305200 01200 0600		
Groove Dimension	ØA	ØB	L
	52.00	12.00	6.00

53.00

Part No	SS305300 06800 1000		
Groove Dimension	ØA	ØB	L
	53.00	68.00	10.00

54.00

Part No	SS305400 07000 1000		
Groove Dimension	ØA	ØB	L
	54.00	70.00	10.00

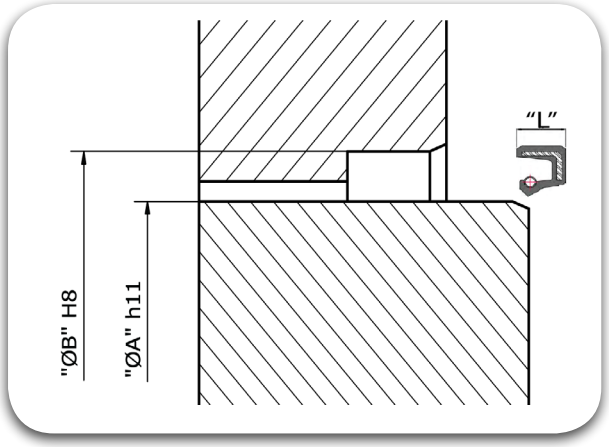

54.00

Part No	SS305400 08500 1000					
Groove Dimension	ØA	x	ØB	x	L	
	54.00		85.00		10.00	

54.00

Part No	SS305400 09000 1300					
Groove Dimension	ØA	x	ØB	x	L	
	54.00		90.00		13.00	

55.00

Part No	SS305500 06800 0800					
Groove Dimension	ØA	x	ØB	x	L	
	55.00		68.00		8.00	

55.00

Part No	SS305500 06800 1000					
Groove Dimension	ØA	x	ØB	x	L	
	55.00		68.00		10.00	

55.00

Part No	SS305500 07000 0800					
Groove Dimension	ØA	x	ØB	x	L	
	55.00		70.00		8.00	

55.00

Part No	SS305500 07000 1000					
Groove Dimension	ØA	x	ØB	x	L	
	55.00		70.00		10.00	

55.00

Part No	SS305500 07200 0800					
Groove Dimension	ØA	x	ØB	x	L	
	55.00		72.00		8.00	

55.00

Part No	SS305500 07200 1000					
Groove Dimension	ØA	x	ØB	x	L	
	55.00		72.00		10.00	

55.00

Part No	SS305500 07500 0800					
Groove Dimension	ØA	x	ØB	x	L	
	55.00		75.00		8.00	

85.00

Part No	SS308500 10000 0900					
Groove Dimension	ØA	x	ØB	x	L	
	85.00		100.00		9.00	

85.00

Part No	SS308500 10500 1000					
Groove Dimension	ØA	x	ØB	x	L	
	85.00		105.00		10.00	

85.00

Part No	SS308500 10000 0900					
Groove Dimension	ØA	x	ØB	x	L	
	85.00		100.00		9.00	

85.00

Part No	SS308500 10500 1000					
Groove Dimension	ØA	x	ØB	x	L	
	85.00		105.00		10.00	

85.00

Part No	SS308500 10500 1300		
Groove Dimension	ØA	ØB	L
	85.00	105.00	13.00

85.00

Part No	SS308500 11000 1000		
Groove Dimension	ØA	ØB	L
	85.00	110.00	10.00

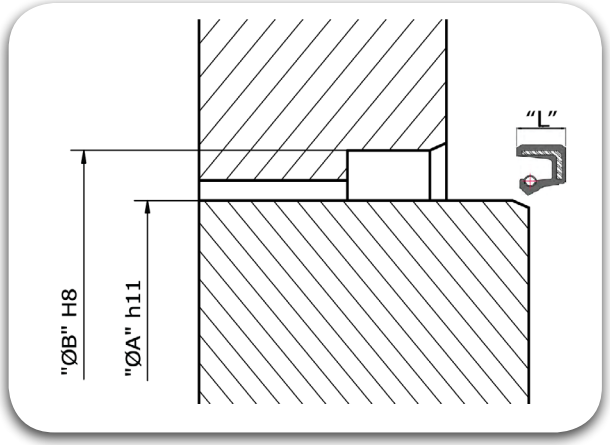

85.00

Part No	SS308500 11000 1200		
Groove Dimension	ØA	ØB	L
	85.00	110.00	12.00

85.00

Part No	SS308500 11000 1300		
Groove Dimension	ØA	ØB	L
	85.00	110.00	13.00

85.00

Part No	SS308500 11500 1300		
Groove Dimension	ØA	ØB	L
	85.00	115.00	13.00

85.00

Part No	SS308500 12000 1200		
Groove Dimension	ØA	ØB	L
	85.00	120.00	12.00

85.00

Part No	SS308500 13000 1200		
Groove Dimension	ØA	ØB	L
	85.00	130.00	12.00

85.00

Part No	SS308500 13000 1300		
Groove Dimension	ØA	ØB	L
	85.00	130.00	13.00

88.00

Part No	SS308800 11000 1200		
Groove Dimension	ØA	ØB	L
	88.00	110.00	12.00

90.00

Part No	SS309000 11000 0800		
Groove Dimension	ØA	ØB	L
	90.00	110.00	8.00

90.00

Part No	SS309000 11000 1000		
Groove Dimension	ØA	ØB	L
	90.00	110.00	10.00

90.00

Part No	SS309000 11000 1200		
Groove Dimension	ØA	ØB	L
	90.00	110.00	12.00

90.00

Part No	SS309000 11000 1300		
Groove Dimension	ØA	ØB	L
	90.00	110.00	13.00

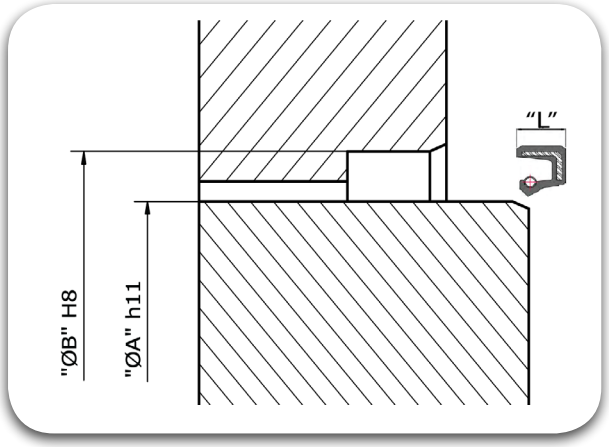

		ØA		ØB		L
90.00	SS309000 11500 1200	90.00	x	115.00	x	12.00
90.00	SS309000 11500 1300	90.00	x	115.00	x	13.00
90.00	SS309000 12000 1000	90.00	x	120.00	x	10.00
90.00	SS309000 12000 1200	90.00	x	120.00	x	12.00
90.00	SS309000 12000 1300	90.00	x	120.00	x	13.00
95.00	SS309500 11000 0600	95.00	x	110.00	x	6.00
90.00	SS309000 14000 1300	90.00	x	140.00	x	13.00
95.00	SS309500 11000 1000	95.00	x	110.00	x	10.00
95.00	SS309500 11000 1200	95.00	x	110.00	x	12.00
95.00	S309500 11500 1200	95.00	x	115.00	x	12.00
95.00	SS309500 11500 1300	95.00	x	115.00	x	13.00
95.00	SS309500 12000 1200	95.00	x	120.00	x	12.00
95.00	SS309500 12000 1300	95.00	x	120.00	x	13.00

95.00

Part No	SS309500 12500 1200		
Groove Dimension	ØA	ØB	L
	95.00	125.00	12.00

95.00

Part No	SS309500 13000 1200		
Groove Dimension	ØA	ØB	L
	95.00	130.00	12.00

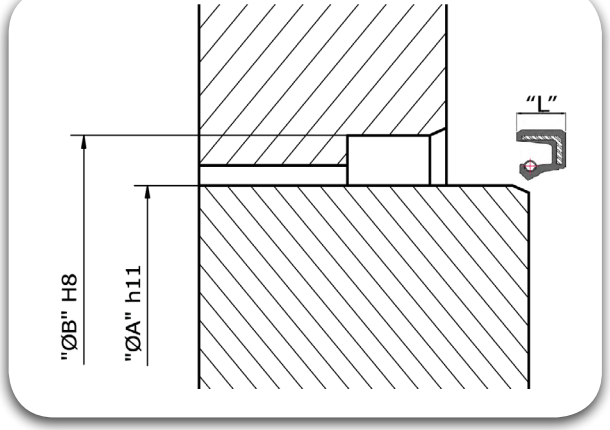

95.00

Part No	SS309500 13600 1300		
Groove Dimension	ØA	ØB	L
	95.00	136.00	13.00

95.00

Part No	SS309500 14500 1300		
Groove Dimension	ØA	ØB	L
	95.00	145.00	13.00

95.00

Part No	SS309500 15000 1300		
Groove Dimension	ØA	ØB	L
	95.00	150.00	13.00

95.00

Part No	SS309500 18050 1300		
Groove Dimension	ØA	ØB	L
	95.00	180.50	13.00

96.00

Part No	SS309600 11700 1000		
Groove Dimension	ØA	ØB	L
	96.00	117.00	10.00

98.00

Part No	SS309800 12000 1300		
Groove Dimension	ØA	ØB	L
	98.00	120.00	13.00

100.00

Part No	SS310000 11500 0900		
Groove Dimension	ØA	ØB	L
	100.00	115.00	9.00

100.00

Part No	SS310000 12000 1000		
Groove Dimension	ØA	ØB	L
	100.00	120.00	10.00

100.00

Part No	SS310000 12000 1200		
Groove Dimension	ØA	ØB	L
	100.00	120.00	12.00

100.00

Part No	SS310000 12000 1300		
Groove Dimension	ØA	ØB	L
	100.00	120.00	13.00

100.00

Part No	SS310000 12000 0600		
Groove Dimension	ØA	ØB	L
	100.00	120.00	6.00

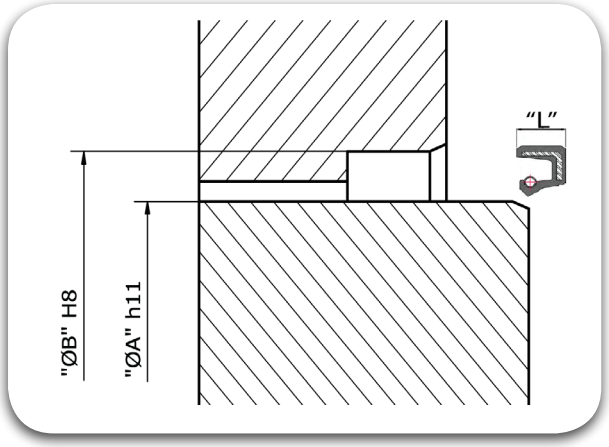

100.00		ØA		ØB		L
Part No	SS310000 12500 1200					
Groove Dimension		100.00	x	125.00	x	12.00

100.00		ØA		ØB		L
Part No	SS310000 13000 1000					
Groove Dimension		100.00	x	130.00	x	10.00

100.00		ØA		ØB		L
Part No	SS310000 13000 1200					
Groove Dimension		100.00	x	130.00	x	12.00

100.00		ØA		ØB		L
Part No	SS310000 13000 1300					
Groove Dimension		100.00	x	130.00	x	13.00

100.00		ØA		ØB		L
Part No	SS310000 14000 1300					
Groove Dimension		100.00	x	140.00	x	13.00

100.00		ØA		ØB		L
Part No	SS310000 15000 1200					
Groove Dimension		100.00	x	150.00	x	12.00

100.00		ØA		ØB		L
Part No	SS310000 18500 1300					
Groove Dimension		100.00	x	185.00	x	13.00

102.00		ØA		ØB		L
Part No	SS310200 13000 1300					
Groove Dimension		102.00	x	130.00	x	13.00

105.00		ØA		ØB		L
Part No	SS310500 12500 1000					
Groove Dimension		105.00	x	125.00	x	10.00

105.00		ØA		ØB		L
Part No	SS310500 12500 1300					
Groove Dimension		105.00	x	125.00	x	13.00

105.00		ØA		ØB		L
Part No	SS310500 13000 1200					
Groove Dimension		105.00	x	130.00	x	12.00

105.00		ØA		ØB		L
Part No	SS310500 13000 1300					
Groove Dimension		105.00	x	130.00	x	13.00

105.00		ØA		ØB		L
Part No	SS310500 14000 1200					
Groove Dimension		105.00	x	140.00	x	12.00

105.00

Part No	SS310500 15000 1500		
Groove Dimension	ØA	ØB	L
	105.00	150.00	15.00

110.00

Part No	SS311000 13000 0800		
Groove Dimension	ØA	ØB	L
	110.00	130.00	8.00

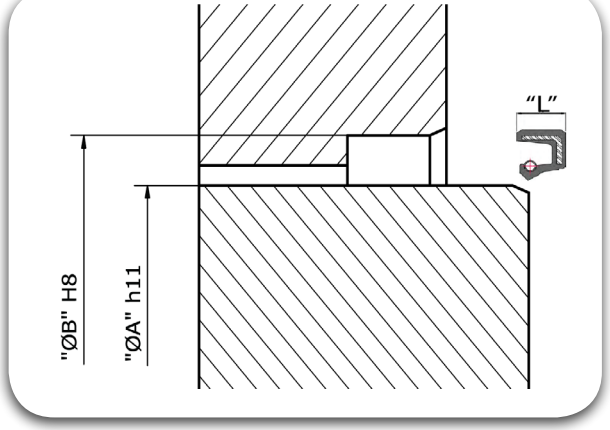

110.00

Part No	SS311000 13000 1200		
Groove Dimension	ØA	ØB	L
	110.00	130.00	12.00

110.00

Part No	SS311000 13000 1300		
Groove Dimension	ØA	ØB	L
	110.00	130.00	13.00

110.00

Part No	SS311000 14000 1200		
Groove Dimension	ØA	ØB	L
	110.00	140.00	12.00

110.00

Part No	SS311000 14000 1300		
Groove Dimension	ØA	ØB	L
	110.00	140.00	13.00

110.00

Part No	SS311000 15000 1300		
Groove Dimension	ØA	ØB	L
	110.00	150.00	13.00

110.00

Part No	SS311000 15000 1500		
Groove Dimension	ØA	ØB	L
	110.00	150.00	15.00

110.00

Part No	SS311000 18050 1300		
Groove Dimension	ØA	ØB	L
	110.00	180.50	13.00

100.00

Part No	SS311000 20000 1300		
Groove Dimension	ØA	ØB	L
	100.00	200.00	13.00

115.00

Part No	SS311500 13000 1200		
Groove Dimension	ØA	ØB	L
	115.00	130.00	12.00

115.00

Part No	SS311500 13500 1000		
Groove Dimension	ØA	ØB	L
	115.00	135.00	10.00

115.00

Part No	SS311500 14000 1200		
Groove Dimension	ØA	ØB	L
	115.00	140.00	12.00

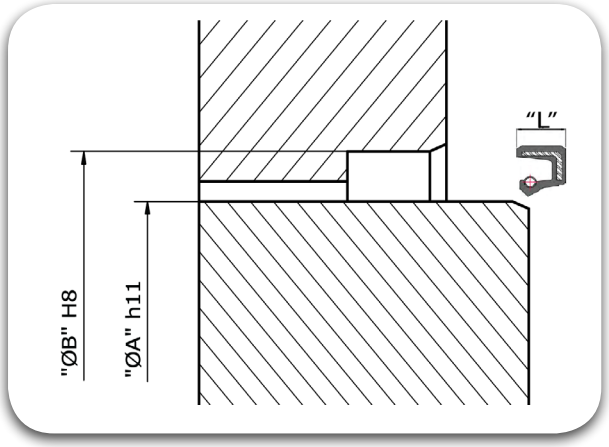

		ØA		ØB		L
115.00	Part No: SS311500 14000 1300 Groove Dimension	115.00	x	140.00	x	13.00
115.00	Part No: SS311500 15000 1000 Groove Dimension	115.00	x	150.00	x	10.00
115.00	Part No: SS311500 15000 1200 Groove Dimension	115.00	x	120.00	x	12.00
120.00	Part No: SS312000 14000 1200 Groove Dimension	120.00	x	140.00	x	12.00
120.00	Part No: SS312000 14000 1300 Groove Dimension	120.00	x	140.00	x	13.00
120.00	Part No: SS312000 14500 1500 Groove Dimension	120.00	x	145.00	x	15.00
120.00	Part No: SS312000 15000 1200 Groove Dimension	120.00	x	150.00	x	12.00
120.00	Part No: SS312000 15000 1300 Groove Dimension	120.00	x	150.00	x	13.00
120.00	Part No: SS312000 16000 1200 Groove Dimension	120.00	x	160.00	x	12.00
122.00	Part No: SS312200 15000 1500 Groove Dimension	122.00	x	150.00	x	15.00
125.00	Part No: SS312500 15000 1200 Groove Dimension	125.00	x	150.00	x	12.00
125.00	Part No: SS312500 15000 1300 Groove Dimension	125.00	x	150.00	x	13.00
125.00	Part No: SS312500 16000 1200 Groove Dimension	125.00	x	160.00	x	12.00

128.00

Part No	SS312800 15000 1500		
Groove Dimension	ØA	ØB	L
	128.00	150.00	15.00

130.00

Part No	SS313000 15000 1000		
Groove Dimension	ØA	ØB	L
	130.00	150.00	10.00

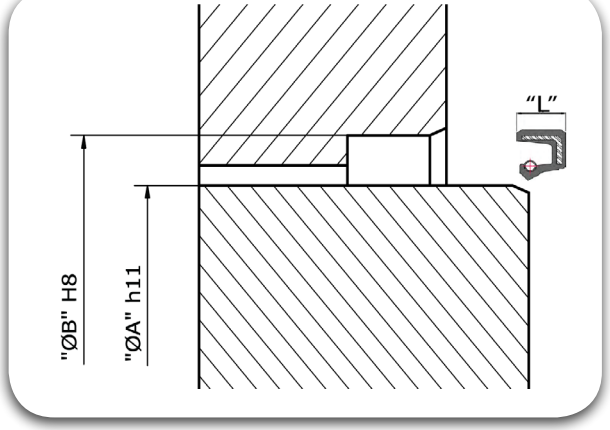

130.00

Part No	SS313000 15000 1080		
Groove Dimension	ØA	ØB	L
	130.00	150.00	10.80

130.00

Part No	SS313000 16000 0750		
Groove Dimension	ØA	ØB	L
	130.00	160.00	7.50

130.00

Part No	SS313000 16000 1200		
Groove Dimension	ØA	ØB	L
	130.00	160.00	12.00

130.00

Part No	SS313000 16000 1300		
Groove Dimension	ØA	ØB	L
	130.00	160.00	13.00

130.00

Part No	SS313000 16000 1500		
Groove Dimension	ØA	ØB	L
	130.00	160.00	15.00

130.00

Part No	SS313000 17000 1200		
Groove Dimension	ØA	ØB	L
	130.00	170.00	12.00

130.00

Part No	SS313000 17000 1300		
Groove Dimension	ØA	ØB	L
	130.00	170.00	13.00

130.00

Part No	SS313000 18000 1500		
Groove Dimension	ØA	ØB	L
	130.00	180.00	15.00

135.00

Part No	SS313500 16000 1200		
Groove Dimension	ØA	ØB	L
	135.00	160.00	12.00

135.00

Part No	SS313500 16000 1300		
Groove Dimension	ØA	ØB	L
	135.00	160.00	13.00

135.00

Part No	SS313500 16000 1500		
Groove Dimension	ØA	ØB	L
	135.00	160.00	15.00

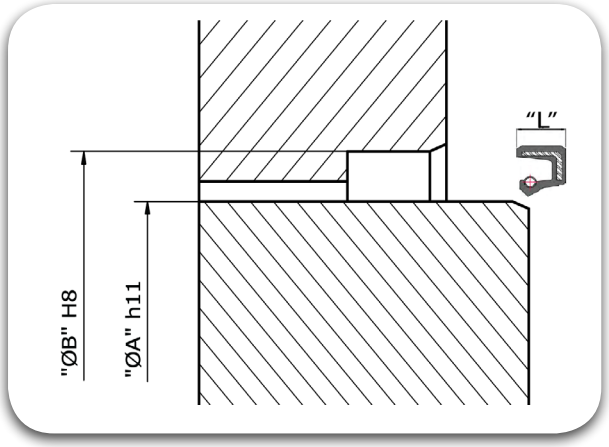

135.00

Part No	SS313500 17000 1200				
Groove Dimension	ØA	x	ØB	x	L
	135.00		170.00		12.00

140.00

Part No	SS314000 16000 1200				
Groove Dimension	ØA	x	ØB	x	L
	140.00		160.00		12.00

140.00

Part No	SS314000 16000 1300				
Groove Dimension	ØA	x	ØB	x	L
	140.00		160.00		13.00

140.00

Part No	SS314000 16500 1200				
Groove Dimension	ØA	x	ØB	x	L
	140.00		165.00		12.00

140.00

Part No	SS314000 17000 1200				
Groove Dimension	ØA	x	ØB	x	L
	140.00		170.00		12.00

140.00

Part No	SS314000 17000 1300				
Groove Dimension	ØA	x	ØB	x	L
	140.00		170.00		13.00

140.00

Part No	SS314000 17000 1500				
Groove Dimension	ØA	x	ØB	x	L
	140.00		170.00		15.00

140.00

Part No	SS314000 18000 1200				
Groove Dimension	ØA	x	ØB	x	L
	140.00		180.00		12.00

140.00

Part No	SS314000 19000 1500				
Groove Dimension	ØA	x	ØB	x	L
	140.00		190.00		15.00

145.00

Part No	SS314500 17000 1500				
Groove Dimension	ØA	x	ØB	x	L
	145.00		170.00		15.00

145.00

Part No	SS314500 17500 1500				
Groove Dimension	ØA	x	ØB	x	L
	145.00		175.00		15.00

145.00

Part No	SS314500 18000 1200				
Groove Dimension	ØA	x	ØB	x	L
	145.00		180.00		12.00

148.00

Part No	SS314800 17000 1500				
Groove Dimension	ØA	x	ØB	x	L
	148.00		170.00		15.00

150.00

Part No	SS315000 17000 1500		
Groove Dimension	ØA	ØB	L
	150.00	170.00	15.00

150.00

Part No	SS315000 18000 1200		
Groove Dimension	ØA	ØB	L
	150.00	180.00	12.00

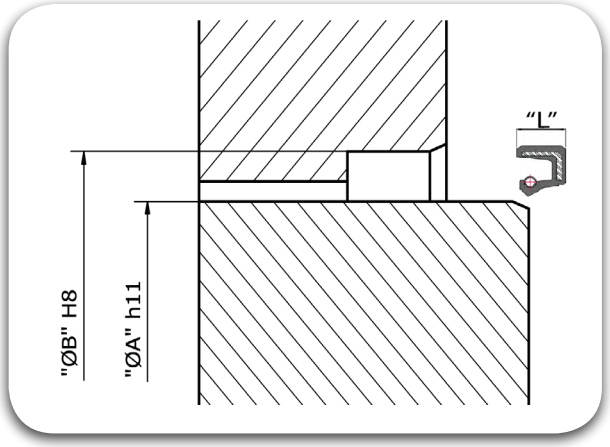

150.00

Part No	SS315000 18000 1300		
Groove Dimension	ØA	ØB	L
	150.00	180.00	13.00

150.00

Part No	SS315000 18000 1500		
Groove Dimension	ØA	ØB	L
	150.00	180.00	15.00

155.00

Part No	SS315500 17400 1200		
Groove Dimension	ØA	ØB	L
	155.00	174.00	12.00

155.00

Part No	SS315500 18000 1500		
Groove Dimension	ØA	ØB	L
	155.00	180.00	15.00

155.00

Part No	SS315500 19000 1500		
Groove Dimension	ØA	ØB	L
	155.00	190.00	15.00

160.00

Part No	SS316000 18000 1000		
Groove Dimension	ØA	ØB	L
	160.00	180.00	10.00

160.00

Part No	SS316000 18000 1500		
Groove Dimension	ØA	ØB	L
	160.00	180.00	15.00

160.00

Part No	SS316000 18500 1000		
Groove Dimension	ØA	ØB	L
	160.00	185.00	10.00

160.00

Part No	SS316000 18500 1300		
Groove Dimension	ØA	ØB	L
	160.00	185.00	13.00

160.00

Part No	SS316000 18500 1000		
Groove Dimension	ØA	ØB	L
	160.00	185.00	10.00

160.00

Part No	SS316000 18500 1300		
Groove Dimension	ØA	ØB	L
	160.00	185.00	13.00

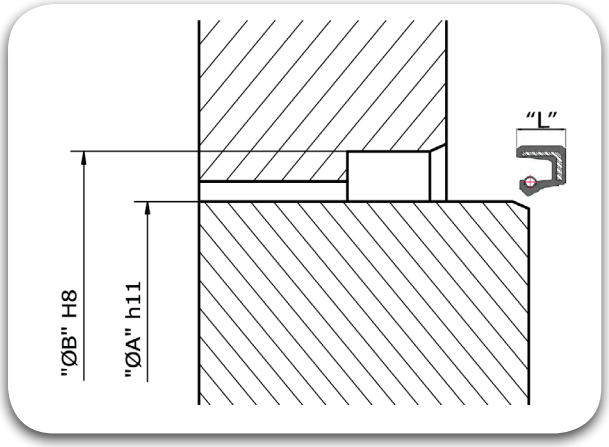

160.00

Part No	SS316000 19000 1300		
Groove Dimension	ØA	ØB	L
	160.00	190.00	13.00

160.00

Part No	SS316000 19000 1500		
Groove Dimension	ØA	ØB	L
	160.00	190.00	15.00

160.00

Part No	SS316000 20000 1200		
Groove Dimension	ØA	ØB	L
	160.00	200.00	120.00

165.00

Part No	SS316500 19000 1300		
Groove Dimension	ØA	ØB	L
	165.00	190.00	13.00

170.00

Part No	SS317000 20000 0750		
Groove Dimension	ØA	ØB	L
	170.00	200.00	7.50

170.00

Part No	SS317000 20000 1200		
Groove Dimension	ØA	ØB	L
	170.00	200.00	12.00

170.00

Part No	SS317000 20000 1500		
Groove Dimension	ØA	ØB	L
	170.00	200.00	15.00

175.00

Part No	SS317500 20000 1000		
Groove Dimension	ØA	ØB	L
	175.00	200.00	10.00

175.00

Part No	SS317500 20000 1500		
Groove Dimension	ØA	ØB	L
	175.00	200.00	15.00

175.00

Part No	SS317500 20500 1500		
Groove Dimension	ØA	ØB	L
	175.00	205.00	15.00

180.00

Part No	SS318000 20000 1500		
Groove Dimension	ØA	ØB	L
	180.00	200.00	15.00

180.00

Part No	SS318000 21000 1500		
Groove Dimension	ØA	ØB	L
	180.00	210.00	15.00

180.00

Part No	SS318000 21500 1600		
Groove Dimension	ØA	ØB	L
	180.00	215.00	16.00

180.00

Part No	SS318000 22000 1500		
Groove Dimension	ØA	ØB	L
	180.00	220.00	15.00

185.00

Part No	SS318500 21000 1000		
Groove Dimension	ØA	ØB	L
	185.00	210.00	10.00

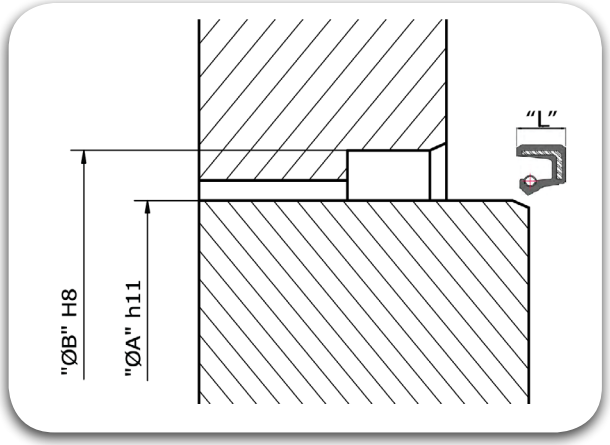

185.00

Part No	SS318500 21000 1300		
Groove Dimension	ØA	ØB	L
	185.00	210.00	13.00

190.00

Part No	SS319000 21500 1500		
Groove Dimension	ØA	ØB	L
	190.00	215.00	15.00

190.00

Part No	SS319000 21000 1500		
Groove Dimension	ØA	ØB	L
	190.00	210.00	15.00

190.00

Part No	SS319000 22500 1600		
Groove Dimension	ØA	ØB	L
	190.00	225.00	16.00

195.00

Part No	SS319500 23000 1600		
Groove Dimension	ØA	ØB	L
	195.00	230.00	16.00

200.00

Part No	SS320000 22500 1500		
Groove Dimension	ØA	ØB	L
	200.00	225.00	15.00

200.00

Part No	SS320000 23000 1500		
Groove Dimension	ØA	ØB	L
	200.00	230.00	15.00

200.00

Part No	SS320000 25000 1500		
Groove Dimension	ØA	ØB	L
	200.00	250.00	15.00

205.00

Part No	SS320500 23000 1600		
Groove Dimension	ØA	ØB	L
	205.00	230.00	16.20

210.00

Part No	SS321000 24000 1500		
Groove Dimension	ØA	ØB	L
	210.00	240.00	15.00

210.00

Part No	SS321000 25000 1500		
Groove Dimension	ØA	ØB	L
	210.00	250.00	15.00

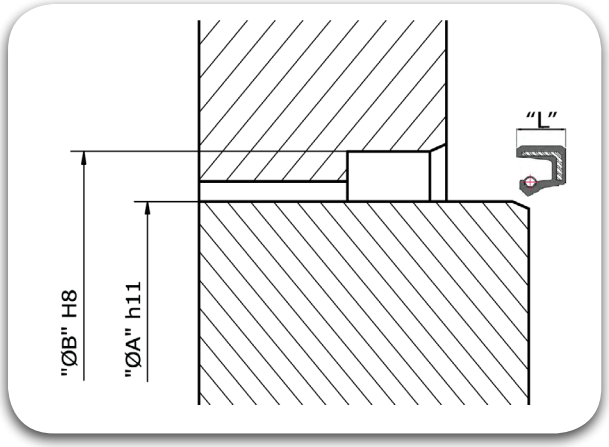

215.00

Part No	SS321500 24000 1200		
Groove Dimension	ØA	ØB	L
	215.00	240.00	12.00

220.00

Part No	SS322000 25000 1500		
Groove Dimension	ØA	ØB	L
	220.00	250.00	15.00

220.00

Part No	SS322000 26000 1600		
Groove Dimension	ØA	ØB	L
	220.00	260.00	16.00

230.00

Part No	SS323000 26000 1500		
Groove Dimension	ØA	ØB	L
	230.00	260.00	15.20

230.00

Part No	SS323000 27000 1500		
Groove Dimension	ØA	ØB	L
	230.00	270.00	15.00

240.00

Part No	SS324000 27000 1500		
Groove Dimension	ØA	ØB	L
	240.00	270.00	15.00

240.00

Part No	SS324000 28000 1500		
Groove Dimension	ØA	ØB	L
	240.00	280.00	15.00

240.00

Part No	SS324000 33500 1500		
Groove Dimension	ØA	ØB	L
	240.00	335.00	15.00

250.00

Part No	SS325000 28000 1500		
Groove Dimension	ØA	ØB	L
	250.00	280.00	15.00

250.00

Part No	SS325000 29000 1500		
Groove Dimension	ØA	ØB	L
	250.00	290.00	15.00

260.00

Part No	SS326000 29000 1500		
Groove Dimension	ØA	ØB	L
	260.00	290.00	15.00

260.00

Part No	SS326000 30000 2000		
Groove Dimension	ØA	ØB	L
	260.00	300.00	20.00

265.00

Part No	SS326500 29000 1600		
Groove Dimension	ØA	ØB	L
	265.00	290.00	16.00

265.00

Part No	SS326500 31000 1600		
Groove Dimension	ØA	ØB	L
	265.00	310.00	16.00

280.00

Part No	SS328000 31000 1500		
Groove Dimension	ØA	ØB	L
	280.00	310.00	15.00

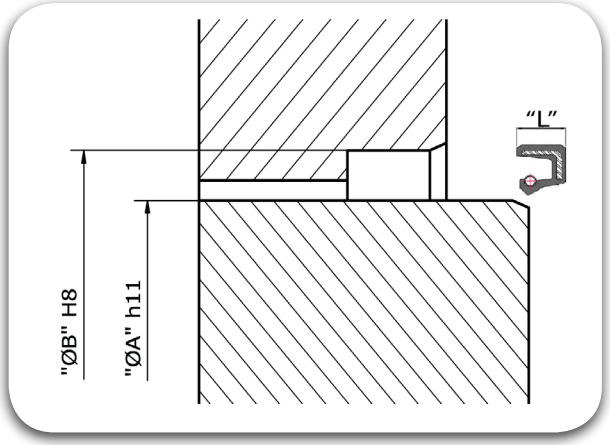

280.00

Part No	SS328000 12000 0600		
Groove Dimension	ØA	ØB	L
	280.00	120.00	6.00

300.00

Part No	SS330000 34000 1600		
Groove Dimension	ØA	ØB	L
	300.00	340.00	16.00

300.00

Part No	SS330000 34000 1800		
Groove Dimension	ØA	ØB	L
	300.00	340.00	18.00

300.00

Part No	SS330000 34000 2000		
Groove Dimension	ØA	ØB	L
	300.00	340.00	20.00

320.00

Part No	SS332000 36000 2000		
Groove Dimension	ØA	ØB	L
	320.00	360.00	20.00

340.00

Part No	SS334000 38000 2000		
Groove Dimension	ØA	ØB	L
	340.00	380.00	20.00

360.00

Part No	SS336000 40000 1800		
Groove Dimension	ØA	ØB	L
	360.00	400.00	18.00

360.00

Part No	SS336000 40000 2000		
Groove Dimension	ØA	ØB	L
	360.00	400.00	20.00

380.00

Part No	SS338000 42000 2000		
Groove Dimension	ØA	ØB	L
	380.00	420.00	20.00

400.00

Part No	SS340000 44000 2000		
Groove Dimension	ØA	ØB	L
	400.00	440.00	20.00

420.00

Part No	SS342000 45000 1500		
Groove Dimension	ØA	ØB	L
	420.00	450.00	15.00

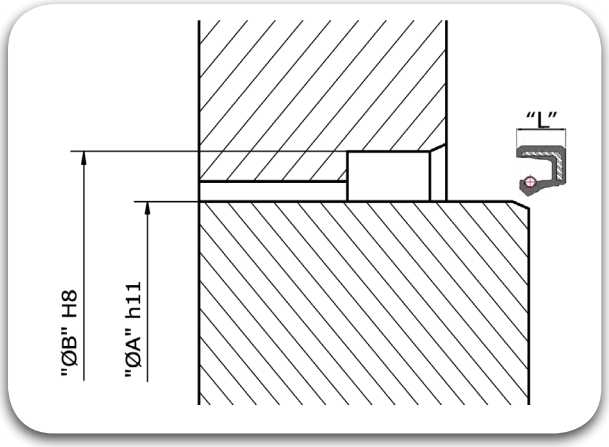

420.00

Part No	SS342000 46000 2000					
Groove Dimension	ØA	x	ØB	x	L	
	420.00		460.00		20.00	

440.00

Part No	SS344000 48000 2000					
Groove Dimension	ØA	x	ØB	x	L	
	440.00		480.00		20.00	

480.00

Part No	SS348000 52000 2000					
Groove Dimension	ØA	x	ØB	x	L	
	480.00		520.00		20.00	

500.00

Part No	SS350000 54000 2000					
Groove Dimension	ØA	x	ØB	x	L	
	500.00		540.00		20.00	

800.00

Part No	SS380000 84000 2000					
Groove Dimension	ØA	x	ØB	x	L	
	800.00		840.00		20.00	

Rotary Seals

SD3

TRIADA
TECHNOLOGIES

#SealingExcellence






Description

The SD3 type is a Double lip rotary shaft seal with metallic ring reinforcement and sheathed by the rubber on outer diameter. The primary lip is used for sealing the medium whereas the secondary lip or the dust lip is used to wipe the dust. The inside metal may be of carbon steel or stainless steeldepending on the application, media, cycle speed etc., the rubber compound is selected considering the media compatibility, temperature, surface speed etc.

Diameter Range	Ø4.00 – Ø2500.00 (Larger dia. on request)
Standard material	TRIAFLEX® T576(NBR)
Temperature(°C)	-30° C to 200° C (Based on Elastomer Material).
Speed	<10.0 m/s
Fluids	Hydraulic fluids (Mineral Oil based), Water, Air etc, depending on Seal Compounds selected. Conditions).
Pressure	<0.50 bar

Material Details

Seal Material	Seal Material Code
TRIAFLEX® NBR 75	T576
TRIAFLEX® FKM 75	T676

Nomenclature

Part No	SD3	12500	15000	1200	T579
	Seal profile	Rod Dia x 100	Groove Dia x 100	Groove Width x 100	Seal Material Code

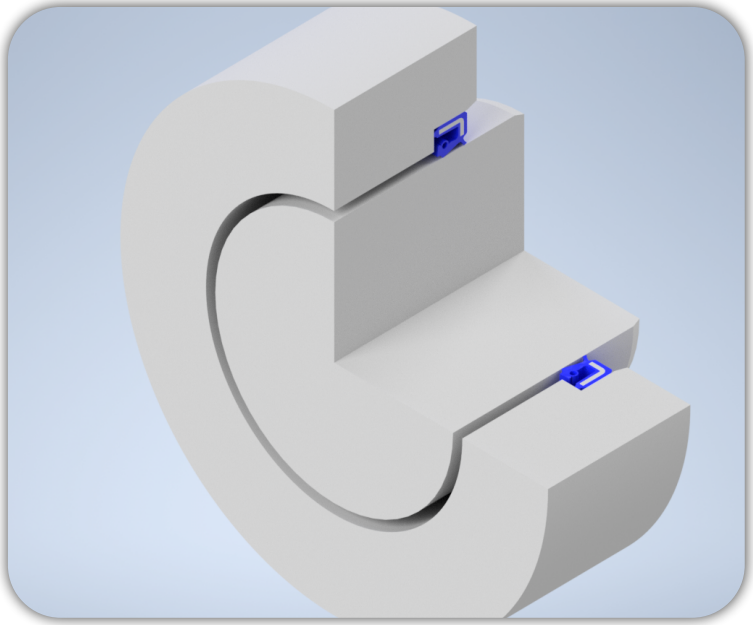

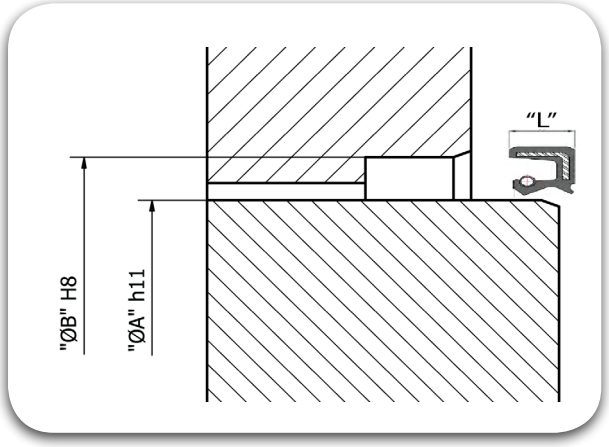

8.00

Part No	SD300800 01600 0700					
Groove Dimension	ØA	x	ØB	x	L	
	8.00		16.00		7.00	

8.00

Part No	SD300800 02000 0600					
Groove Dimension	ØA	x	ØB	x	L	
	8.00		20.00		6.00	

10.00

Part No	SD300100 01800 0600					
Groove Dimension	ØA	x	ØB	x	L	
	10.00		18.00		6.00	

10.00

Part No	SD301000 01900 0700					
Groove Dimension	ØA	x	ØB	x	L	
	10.00		18.00		6.00	

10.00

Part No	SD301000 02000 0500					
Groove Dimension	ØA	x	ØB	x	L	
	10.00		20.00		5.00	

10.00

Part No	SD301000 02200 0700					
Groove Dimension	ØA	x	ØB	x	L	
	10.00		22.00		7.00	

10.00

Part No	SD301000 02600 0700					
Groove Dimension	ØA	x	ØB	x	L	
	10.00		26.00		7.00	

11.00

Part No	SD301100 01700 0400					
Groove Dimension	ØA	x	ØB	x	L	
	11.00		17.00		4.00	

12.00

Part No	SD301200 01900 0500					
Groove Dimension	ØA	x	ØB	x	L	
	12.00		19.00		5.00	

12.00

Part No	SD301200 02000 0500					
Groove Dimension	ØA	x	ØB	x	L	
	12.00		20.00		5.00	

12.00

Part No	SD301200 02200 0600					
Groove Dimension	ØA	x	ØB	x	L	
	12.00		22.00		6.00	

12.00

Part No	SD301200 02200 0700					
Groove Dimension	ØA	x	ØB	x	L	
	12.00		22.00		7.00	

12.00

Part No	SD301200 02500 0700					
Groove Dimension	ØA	x	ØB	x	L	
	12.00		25.00		7.00	

12.00

Part No	SD301200 02800 0700		
Groove Dimension	ØA	ØB	L
	12.00	28.00	7.00

12.00

Part No	SD301200 03200 0700		
Groove Dimension	ØA	ØB	L
	12.00	32.00	7.00

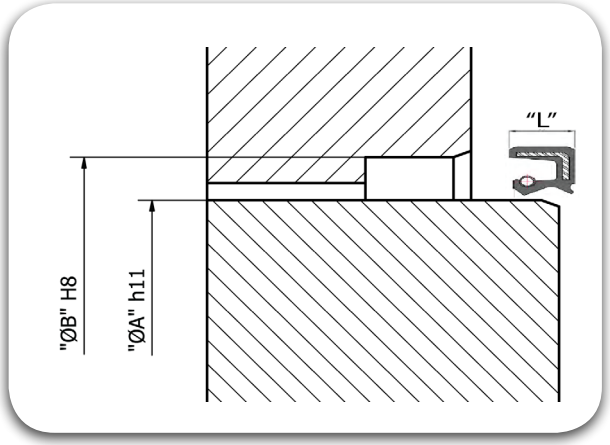

13.00

Part No	SD301300 02600 0900		
Groove Dimension	ØA	ØB	L
	13.00	26.00	9.00

14.00

Part No	SD301400 03500 0700		
Groove Dimension	ØA	ØB	L
	14.00	35.00	7.00

15.00

Part No	SD301500 02400 0700		
Groove Dimension	ØA	ØB	L
	15.00	24.00	7.00

15.00

Part No	SD301500 02600 0700		
Groove Dimension	ØA	ØB	L
	15.00	26.00	7.00

15.00

Part No	SD301500 02800 0700		
Groove Dimension	ØA	ØB	L
	15.00	28.00	7.00

15.00

Part No	SD301500 03000 0700		
Groove Dimension	ØA	ØB	L
	15.00	30.00	7.00

15.00

Part No	SD301500 03200 0700		
Groove Dimension	ØA	ØB	L
	15.00	32.00	7.00

15.00

Part No	SD301500 03500 0700		
Groove Dimension	ØA	ØB	L
	15.00	32.00	7.00

16.00

Part No	SD301600 02800 0700		
Groove Dimension	ØA	ØB	L
	16.00	28.00	7.00

16.00

Part No	SD301600 02900 0400		
Groove Dimension	ØA	ØB	L
	16.00	29.00	4.00

17.00

Part No	SD301700 02800 0700		
Groove Dimension	ØA	ØB	L
	17.00	28.00	7.00

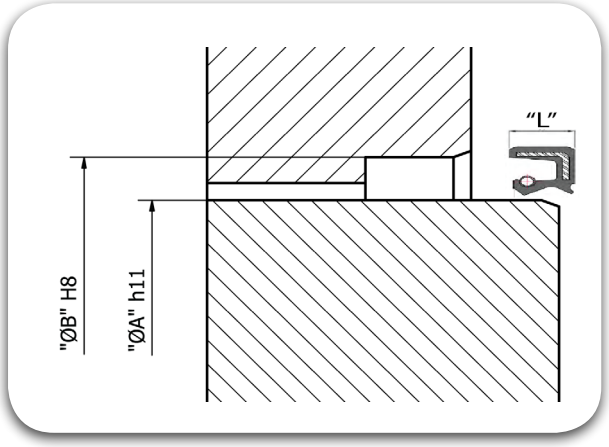

17.00

Part No	SD301700 03000 0700		
Groove Dimension	ØA	ØB	L
	17.00	30.00	7.00

17.00

Part No	SD301700 03700 0700		
Groove Dimension	ØA	ØB	L
	17.00	37.00	7.00

17.00

Part No	SD301700 04000 0700		
Groove Dimension	ØA	ØB	L
	17.00	40.00	7.00

17.80

Part No	SD301780 02620 0350		
Groove Dimension	ØA	ØB	L
	17.80	26.20	3.50

18.00

Part No	SD301800 02800 0700		
Groove Dimension	ØA	ØB	L
	18.00	28.00	7.00

18.00

Part No	SD301800 03000 0700		
Groove Dimension	ØA	ØB	L
	18.00	30.00	7.00

18.00

Part No	SD301800 03200 0700		
Groove Dimension	ØA	ØB	L
	18.00	32.00	7.00

18.00

Part No	SD301800 03500 0700		
Groove Dimension	ØA	ØB	L
	18.00	35.00	7.00

20.00

Part No	SD302000 03000 0700		
Groove Dimension	ØA	ØB	L
	20.00	30.00	7.00

20.00

Part No	SD302000 03400 0700		
Groove Dimension	ØA	ØB	L
	20.00	34.00	7.00

20.00

Part No	SD302000 03500 0700		
Groove Dimension	ØA	ØB	L
	20.00	35.00	7.00

20.00

Part No	SD302000 03600 0700		
Groove Dimension	ØA	ØB	L
	20.00	36.00	7.00

20.00

Part No	SD302000 04000 0700		
Groove Dimension	ØA	ØB	L
	20.00	40.00	7.00

20.00

Part No	SD302000 04200 0700		
Groove Dimension	ØA	ØB	L
	20.00	42.00	7.00

20.00

Part No	SD302000 04200 1000		
Groove Dimension	ØA	ØB	L
	20.00	42.00	10.00

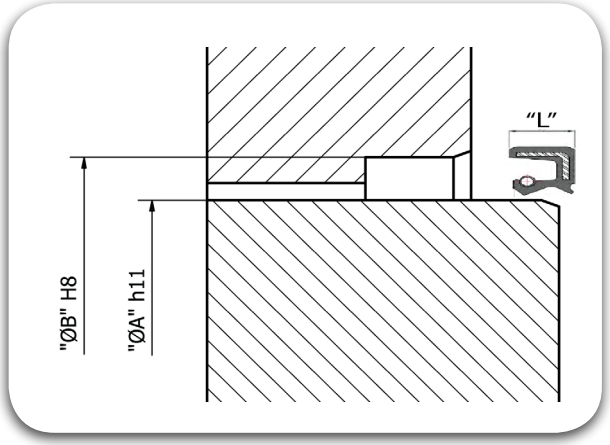

20.00

Part No	SD302000 04700 0700		
Groove Dimension	ØA	ØB	L
	20.00	47.00	7.00

20.00

Part No	SD302000 04700 1000		
Groove Dimension	ØA	ØB	L
	20.00	47.00	10.00

20.00

Part No	SD302000 05200 0800		
Groove Dimension	ØA	ØB	L
	20.00	52.00	8.00

22.00

Part No	SD302200 02800 0400		
Groove Dimension	ØA	ØB	L
	22.00	28.00	4.00

22.00

Part No	SD302200 03200 0700		
Groove Dimension	ØA	ØB	L
	22.00	32.00	7.00

22.00

Part No	SD302200 03500 0700		
Groove Dimension	ØA	ØB	L
	22.00	35.00	7.00

22.00

Part No	SD302200 04000 0700		
Groove Dimension	ØA	ØB	L
	22.00	40.00	7.00

22.00

Part No	SD302200 04700 0700		
Groove Dimension	ØA	ØB	L
	22.00	47.00	7.00

24.00

Part No	SD302400 03200 0700		
Groove Dimension	ØA	ØB	L
	24.00	32.00	7.00

24.00

Part No	SD302400 03600 0700		
Groove Dimension	ØA	ØB	L
	24.00	36.00	7.00

24.00

Part No	SD302400 04700 0700		
Groove Dimension	ØA	ØB	L
	24.00	47.00	7.00

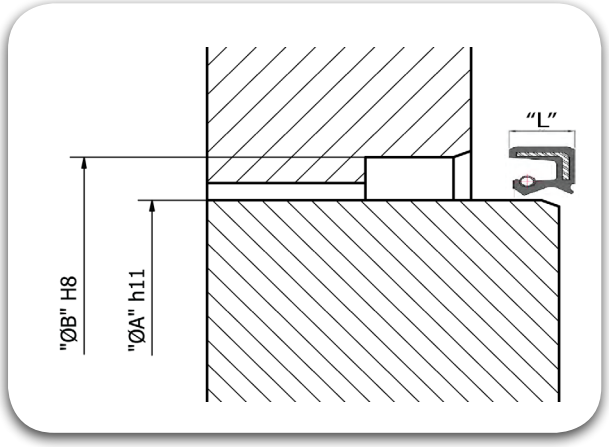

25.00		ØA		ØB		L
Part No	SD302500 03200 0600					
Groove Dimension		25.00	x	32.00	x	6.00

25.00		ØA		ØB		L
Part No	SD302500 03500 0600					
Groove Dimension		25.00	x	35.00	x	6.00

25.00		ØA		ØB		L
Part No	SD302500 03500 0700					
Groove Dimension		25.00	x	35.00	x	7.00

25.00		ØA		ØB		L
Part No	SD302500 03800 0800					
Groove Dimension		25.00	x	38.00	x	8.00

25.00		ØA		ØB		L
Part No	SD302500 04000 0700					
Groove Dimension		25.00	x	40.00	x	7.00

25.00		ØA		ØB		L
Part No	SD302500 04000 0800					
Groove Dimension		25.00	x	40.00	x	8.00

25.00		ØA		ØB		L
Part No	SD302500 04200 0700					
Groove Dimension		25.00	x	42.00	x	7.00

25.00		ØA		ØB		L
Part No	SD302500 04200 1000					
Groove Dimension		25.00	x	42.00	x	10.00

25.00		ØA		ØB		L
Part No	SD302500 04700 0700					
Groove Dimension		25.00	x	47.00	x	7.00

25.00		ØA		ØB		L
Part No	SD302500 04700 0800					
Groove Dimension		25.00	x	47.00	x	8.00

25.00		ØA		ØB		L
Part No	SD302500 04700 1000					
Groove Dimension		25.00	x	47.00	x	10.00

25.00		ØA		ØB		L
Part No	SD302500 05200 0700					
Groove Dimension		25.00	x	52.00	x	7.00

25.00		ØA		ØB		L
Part No	SD302500 05200 1000					
Groove Dimension		25.00	x	52.00	x	10.00

25.00

Part No	SD302500 06200 0700		
Groove Dimension	ØA	ØB	L
	25.00	62.00	7.00

26.00

Part No	SD302600 03700 0700		
Groove Dimension	ØA	ØB	L
	26.00	37.00	7.00

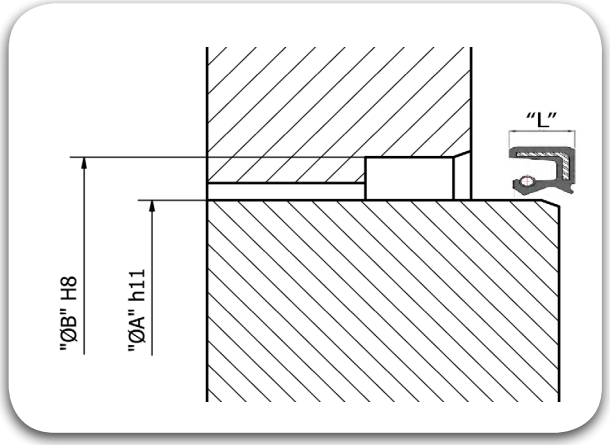

28.00

Part No	SD302800 04000 0700		
Groove Dimension	ØA	ØB	L
	28.00	40.00	7.00

28.00

Part No	SD302800 04200 0800		
Groove Dimension	ØA	ØB	L
	28.00	42.00	8.00

28.00

Part No	SD302800 04500 0700		
Groove Dimension	ØA	ØB	L
	28.00	45.00	7.00

28.00

Part No	SD302800 04700 0700		
Groove Dimension	ØA	ØB	L
	28.00	47.00	7.00

28.00

Part No	SD302800 04700 1000		
Groove Dimension	ØA	ØB	L
	28.00	47.00	10.00

28.00

Part No	SD302800 05200 0700		
Groove Dimension	ØA	ØB	L
	28.00	52.00	7.00

28.00

Part No	SD302800 05200 1000		
Groove Dimension	ØA	ØB	L
	28.00	52.00	10.00

30.00

Part No	SD303000 04000 0700		
Groove Dimension	ØA	ØB	L
	30.00	40.00	7.00

30.00

Part No	SD303000 04200 0570		
Groove Dimension	ØA	ØB	L
	30.00	42.00	5.70

30.00

Part No	SD303000 04200 0600		
Groove Dimension	ØA	ØB	L
	30.00	42.00	6.00

30.00

Part No	SD303000 04200 0700		
Groove Dimension	ØA	ØB	L
	30.00	42.00	7.00

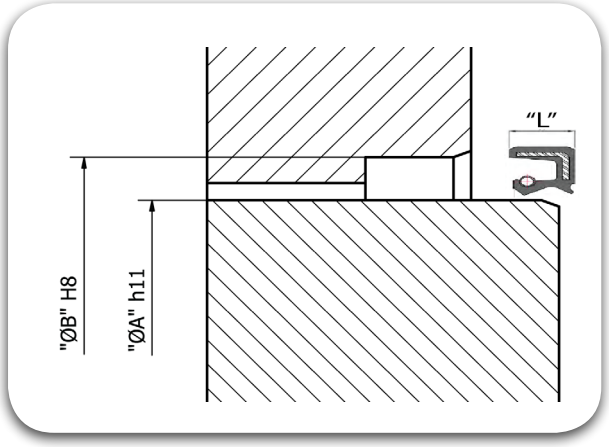

30.00

Part No	SD303000 04200 0800		
Groove Dimension	ØA	ØB	L
	30.00	42.00	8.00

30.00

Part No	SD303000 04700 0700		
Groove Dimension	ØA	ØB	L
	30.00	47.00	7.00

30.00

Part No	SD303000 04700 0800		
Groove Dimension	ØA	ØB	L
	30.00	47.00	8.00

30.00

Part No	SD303000 04800 0700		
Groove Dimension	ØA	ØB	L
	30.00	48.00	7.00

30.00

Part No	SD303000 05000 1000		
Groove Dimension	ØA	ØB	L
	30.00	50.00	10.00

30.00

Part No	SD303000 05200 0700		
Groove Dimension	ØA	ØB	L
	30.00	52.00	7.00

30.00

Part No	SD303000 05200 1000		
Groove Dimension	ØA	ØB	L
	30.00	52.00	10.00

30.00

Part No	SD303000 05500 0700		
Groove Dimension	ØA	ØB	L
	30.00	55.00	7.00

30.00

Part No	SD303000 05500 1000		
Groove Dimension	ØA	ØB	L
	30.00	55.00	10.00

30.00

Part No	SD303000 06200 0700		
Groove Dimension	ØA	ØB	L
	30.00	62.00	7.00

30.00

Part No	SD303000 06200 1000		
Groove Dimension	ØA	ØB	L
	30.00	62.00	10.00

30.00

Part No	SD303000 07200 1000		
Groove Dimension	ØA	ØB	L
	30.00	72.00	10.00

32.00

Part No	SD303200 04200 0500		
Groove Dimension	ØA	ØB	L
	32.00	42.00	5.00

32.00

Part No	SD303200 04500 0700		
Groove Dimension	ØA	ØB	L
	32.00	45.00	7.00

32.00

Part No	SD303200 04500 0800		
Groove Dimension	ØA	ØB	L
	32.00	45.00	8.00

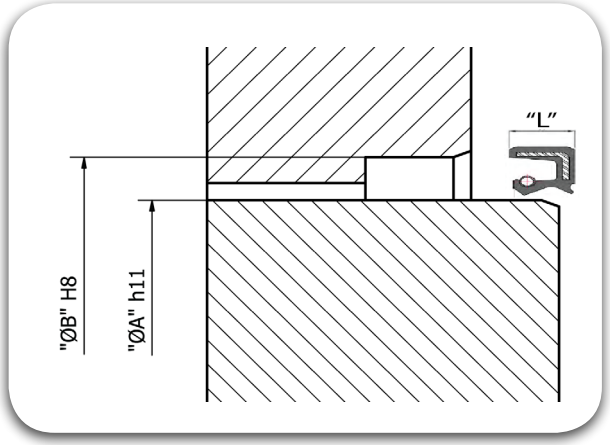

32.00

Part No	SD303200 04700 1000		
Groove Dimension	ØA	ØB	L
	32.00	47.00	10.00

32.00

Part No	SD303200 05000 1000		
Groove Dimension	ØA	ØB	L
	32.00	50.00	10.00

32.00

Part No	SD303200 05200 0700		
Groove Dimension	ØA	ØB	L
	32.00	52.00	7.00

32.00

Part No	SD303200 05200 0700		
Groove Dimension	ØA	ØB	L
	32.00	52.00	7.00

34.00

Part No	SD303400 07200 1000		
Groove Dimension	ØA	ØB	L
	34.00	72.00	10.00

35.00

Part No	SD303500 04700 0700		
Groove Dimension	ØA	ØB	L
	35.00	47.00	7.00

35.00

Part No	SD303500 05000 0700		
Groove Dimension	ØA	ØB	L
	35.00	50.00	7.00

35.00

Part No	SD303500 05200 0600		
Groove Dimension	ØA	ØB	L
	35.00	52.00	6.00

35.00

Part No	SD303500 05200 0700		
Groove Dimension	ØA	ØB	L
	35.00	52.00	7.00

35.00

Part No	SD303500 05200 0800		
Groove Dimension	ØA	ØB	L
	35.00	52.00	8.00

35.00

Part No	SD303500 05200 1000		
Groove Dimension	ØA	ØB	L
	35.00	52.00	10.00

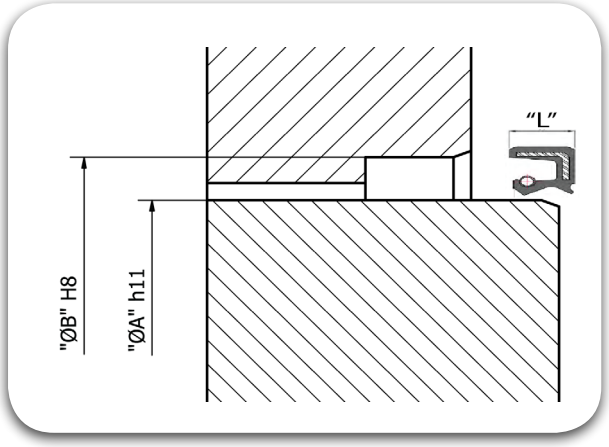

35.00

Part No	SD303500 05500 0800					
Groove Dimension	ØA	x	ØB	x	L	
	35.00		55.00		8.00	

35.00

Part No	SD303500 05600 1000					
Groove Dimension	ØA	x	ØB	x	L	
	35.00		56.00		10.00	

35.00

Part No	SD303500 05800 1000					
Groove Dimension	ØA	x	ØB	x	L	
	35.00		58.00		10.00	

35.00

Part No	SD303500 06200 0700					
Groove Dimension	ØA	x	ØB	x	L	
	35.00		62.00		7.00	

35.00

Part No	SD303500 06200 0800					
Groove Dimension	ØA	x	ØB	x	L	
	35.00		62.00		8.00	

35.00

Part No	SD303500 06200 1000					
Groove Dimension	ØA	x	ØB	x	L	
	35.00		62.00		10.00	

35.00

Part No	SD303500 06200 1200					
Groove Dimension	ØA	x	ØB	x	L	
	35.00		62.00		12.00	

35.00

Part No	SD303500 07200 0700					
Groove Dimension	ØA	x	ØB	x	L	
	35.00		72.00		7.00	

35.00

Part No	SD303500 07200 1000					
Groove Dimension	ØA	x	ØB	x	L	
	35.00		72.00		10.00	

35.00

Part No	SD303500 07200 1200					
Groove Dimension	ØA	x	ØB	x	L	
	35.00		72.00		12.00	

35.00

Part No	SD303500 08000 1000					
Groove Dimension	ØA	x	ØB	x	L	
	35.00		80.00		10.00	

35.00

Part No	SD303500 08000 1200					
Groove Dimension	ØA	x	ØB	x	L	
	35.00		80.00		12.00	

36.00

Part No	SD303600 04700 0700					
Groove Dimension	ØA	x	ØB	x	L	
	36.00		47.00		7.00	

36.00

Part No	SD303600 05000 0700
Groove Dimension	ØA 36.00 x ØB 50.00 x L 7.00

36.00

Part No	SD303600 0520 07000
Groove Dimension	ØA 36.00 x ØB 52.00 x L 7.00

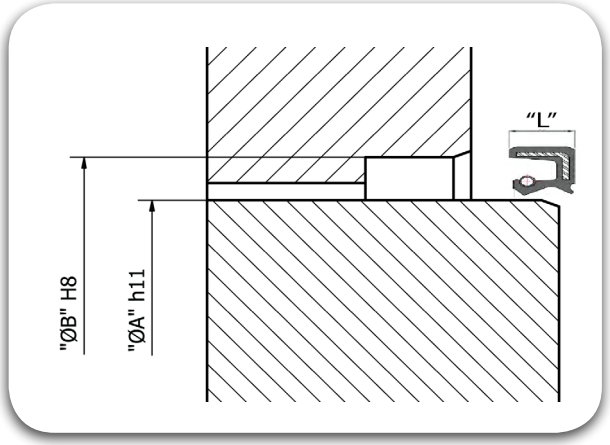

36.00

Part No	SD303600 05400 0700
Groove Dimension	ØA 36.00 x ØB 54.00 x L 7.00

36.00

Part No	SD303600 05800 1000
Groove Dimension	ØA 36.00 x ØB 58.00 x L 10.00

36.00

Part No	SD303600 06800 1000
Groove Dimension	ØA 36.00 x ØB 68.00 x L 10.00

38.00

Part No	SD303800 05200 0700
Groove Dimension	ØA 38.00 x ØB 52.00 x L 7.00

38.00

Part No	SD303800 06200 1000
Groove Dimension	ØA 38.00 x ØB 62.00 x L 10.00

40.00

Part No	SD304000 05200 0500
Groove Dimension	ØA 40.00 x ØB 52.00 x L 5.00

40.00

Part No	SD304000 05200 0700
Groove Dimension	ØA 40.00 x ØB 52.00 x L 7.00

40.00

Part No	SD304000 05500 0700
Groove Dimension	ØA 40.00 x ØB 55.00 x L 7.00

40.00

Part No	SD304000 05500 0800
Groove Dimension	ØA 40.00 x ØB 55.00 x L 8.00

40.00

Part No	SD304000 05600 0800
Groove Dimension	ØA 40.00 x ØB 56.00 x L 8.00

40.00

Part No	SD304000 05800 0900
Groove Dimension	ØA 40.00 x ØB 58.00 x L 9.00

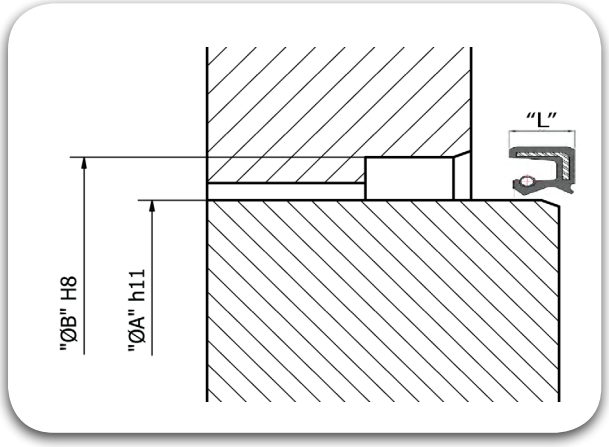

40.00	ØA	ØB	L
Part No: SD304000 05800 1000			
Groove Dimension	40.00	58.00	10.00

40.00	ØA	ØB	L
Part No: SD304000 06000 1000			
Groove Dimension	40.00	60.00	10.00

40.00	ØA	ØB	L
Part No: SD304000 06200 0700			
Groove Dimension	40.00	62.00	7.00

40.00	ØA	ØB	L
Part No: SD304000 06200 0900			
Groove Dimension	40.00	62.00	9.00

40.00	ØA	ØB	L
Part No: SD304000 06200 1000			
Groove Dimension	40.00	62.00	10.00

40.00	ØA	ØB	L
Part No: SD304000 06800 0700			
Groove Dimension	40.00	68.00	7.00

40.00	ØA	ØB	L
Part No: SD304000 06800 0800			
Groove Dimension	40.00	68.00	8.00

40.00	ØA	ØB	L
Part No: SD304000 07200 0700			
Groove Dimension	40.00	72.00	7.00

40.00	ØA	ØB	L
Part No: SD304000 07200 1000			
Groove Dimension	40.00	72.00	10.00

40.00	ØA	ØB	L
Part No: SD304000 08000 0700			
Groove Dimension	40.00	80.00	7.00

40.00	ØA	ØB	L
Part No: SD304000 08000 0800			
Groove Dimension	40.00	80.00	8.00

40.00	ØA	ØB	L
Part No: SD304000 08000 1000			
Groove Dimension	40.00	80.00	10.00

40.00	ØA	ØB	L
Part No: SD304000 08000 1200			
Groove Dimension	40.00	80.00	12.00

40.00

Part No	SD304000 09000 0800		
Groove Dimension	ØA	ØB	L
	40.00	90.00	8.00

40.00

Part No	SD304000 09000 1000		
Groove Dimension	ØA	ØB	L
	40.00	90.00	10.00

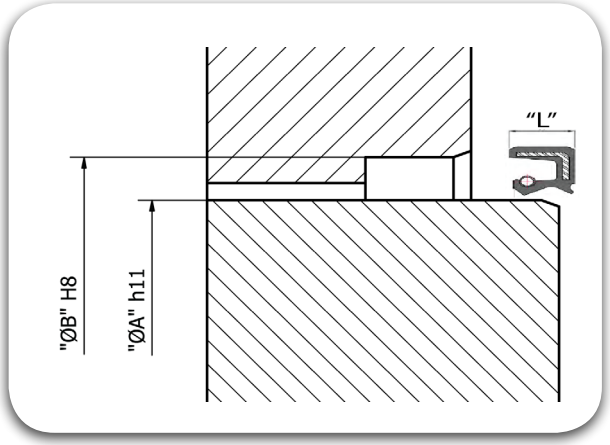

42.00

Part No	SD304200 05500 0800		
Groove Dimension	ØA	ØB	L
	42.00	55.00	8.00

42.00

Part No	SD304200 06000 0700		
Groove Dimension	ØA	ØB	L
	42.00	60.00	7.00

42.00

Part No	SD304200 06200 0700		
Groove Dimension	ØA	ØB	L
	42.00	62.00	7.00

42.00

Part No	SD304200 06200 1000		
Groove Dimension	ØA	ØB	L
	42.00	62.00	10.00

42.00

Part No	SD304200 07200 0800		
Groove Dimension	ØA	ØB	L
	42.00	72.00	8.00

42.00

Part No	SD304200 07200 1000		
Groove Dimension	ØA	ØB	L
	42.00	72.00	10.00

45.00

Part No	SD304500 06000 0700		
Groove Dimension	ØA	ØB	L
	45.00	60.00	7.00

45.00

Part No	SD304500 06000 0800		
Groove Dimension	ØA	ØB	L
	45.00	60.00	8.00

45.00

Part No	SD304500 06200 0700		
Groove Dimension	ØA	ØB	L
	45.00	62.00	7.00

45.00

Part No	SD304500 06200 0800		
Groove Dimension	ØA	ØB	L
	45.00	62.00	8.00

45.00

Part No	SD304500 06200 1000		
Groove Dimension	ØA	ØB	L
	45.00	62.00	10.00

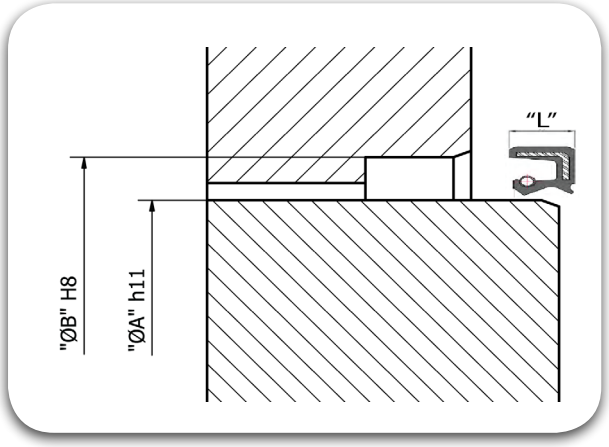

45.00

Part No	SD304500 06500 0800
Groove Dimension	ØA 45.00 x ØB 65.00 x L 8.00

45.00

Part No	SD304500 06500 1000
Groove Dimension	ØA 45.00 x ØB 65.00 x L 10.00

45.00

Part No	SD304500 06800 0800
Groove Dimension	ØA 45.00 x ØB 68.00 x L 8.00

45.00

Part No	SD304500 06800 1000
Groove Dimension	ØA 45.00 x ØB 68.00 x L 10.00

45.00

Part No	SD304500 07200 0800
Groove Dimension	ØA 45.00 x ØB 72.00 x L 8.00

45.00

Part No	SD304500 07200 1000
Groove Dimension	ØA 45.00 x ØB 72.00 x L 10.00

45.00

Part No	SD304500 07200 1200
Groove Dimension	ØA 45.00 x ØB 72.00 x L 12.00

45.00

Part No	SD304500 07500 0700
Groove Dimension	ØA 45.00 x ØB 75.00 x L 7.00

45.00

Part No	SD304500 07500 0800
Groove Dimension	ØA 45.00 x ØB 75.00 x L 8.00

45.00

Part No	SD304500 07500 1000
Groove Dimension	ØA 45.00 x ØB 75.00 x L 10.00

45.00

Part No	SD304500 08000 1000
Groove Dimension	ØA 45.00 x ØB 80.00 x L 10.00

45.00

Part No	SD304500 08500 1000
Groove Dimension	ØA 45.00 x ØB 85.00 x L 10.00

45.00

Part No	SD304500 09000 1000
Groove Dimension	ØA 45.00 x ØB 90.00 x L 10.00

47.00

Part No	SD304700 09000 1000		
Groove Dimension	ØA	ØB	L
	47.00	90.00	10.00

48.00

Part No	SD304800 06200 0800		
Groove Dimension	ØA	ØB	L
	48.00	62.00	8.00

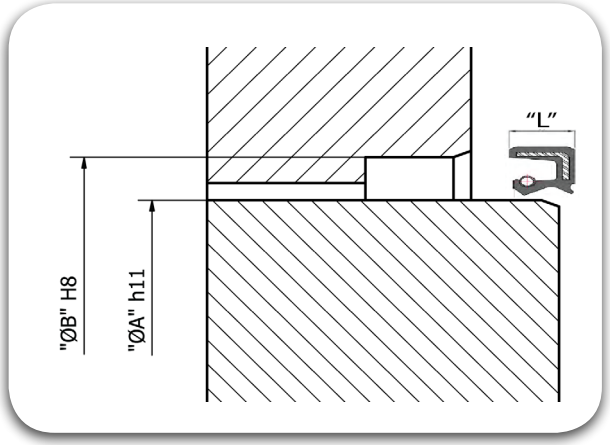

48.00

Part No	SD304800 06500 1000		
Groove Dimension	ØA	ØB	L
	48.00	65.00	10.00

48.00

Part No	SD304800 06800 1000		
Groove Dimension	ØA	ØB	L
	48.00	68.00	10.00

48.00

Part No	SD304800 07200 0700		
Groove Dimension	ØA	ØB	L
	48.00	72.00	7.00

48.00

Part No	SD304800 07200 0800		
Groove Dimension	ØA	ØB	L
	48.00	72.00	8.00

48.00

Part No	SD304800 07200 1200		
Groove Dimension	ØA	ØB	L
	48.00	72.00	12.00

48.00

Part No	SD304800 07250 1000		
Groove Dimension	ØA	ØB	L
	48.00	72.50	10.00

50.00

Part No	SD305000 06200 0700		
Groove Dimension	ØA	ØB	L
	50.00	62.00	7.00

50.00

Part No	SD305000 06500 0800		
Groove Dimension	ØA	ØB	L
	50.00	65.00	8.00

50.00

Part No	SD305000 06500 1000		
Groove Dimension	ØA	ØB	L
	50.00	65.00	10.00

50.00

Part No	SD305000 06800 0700		
Groove Dimension	ØA	ØB	L
	50.00	68.00	7.00

50.00

Part No	SD305000 06800 0800		
Groove Dimension	ØA	ØB	L
	50.00	68.00	8.00

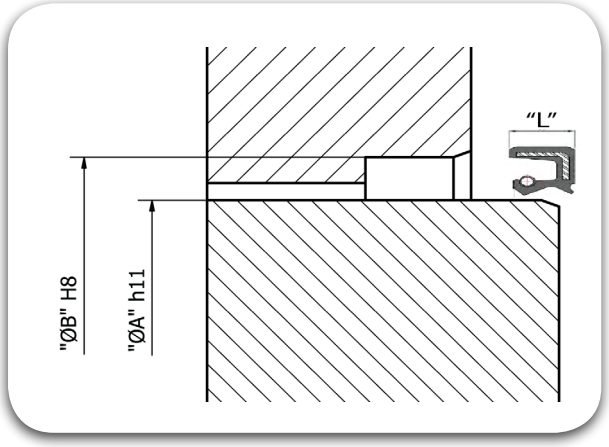

50.00	ØA	ØB	L
Part No: SD305000 06800 1000			
Groove Dimension	50.00	68.00	10.00

50.00	ØA	ØB	L
Part No: SD305000 07000 1000			
Groove Dimension	50.00	70.00	10.00

50.00	ØA	ØB	L
Part No: SD305000 07200 0700			
Groove Dimension	50.00	72.00	7.00

50.00	ØA	ØB	L
Part No: SD305000 07200 0800			
Groove Dimension	50.00	72.00	8.00

50.00	ØA	ØB	L
Part No: SD305000 07200 1000			
Groove Dimension	50.00	72.00	10.00

50.00	ØA	ØB	L
Part No: SD305000 07500 1000			
Groove Dimension	50.00	75.00	10.00

50.00	ØA	ØB	L
Part No: SD305000 08000 0800			
Groove Dimension	50.00	80.00	8.00

50.00	ØA	ØB	L
Part No: SD305000 08000 1000			
Groove Dimension	50.00	80.00	10.00

50.00	ØA	ØB	L
Part No: SD305000 09000 0800			
Groove Dimension	50.00	90.00	8.00

50.00	ØA	ØB	L
Part No: SD305000 09000 1000			
Groove Dimension	50.00	90.00	10.00

52.00	ØA	ØB	L
Part No: SD305200 06800 0800			
Groove Dimension	52.00	68.00	8.00

52.00	ØA	ØB	L
Part No: SD305200 07200 0800			
Groove Dimension	52.00	72.00	8.00

52.00	ØA	ØB	L
Part No: SD305200 07200 0100			
Groove Dimension	52.00	72.00	10.00

52.00

Part No	SD305200 08500 1000		
Groove Dimension	ØA	ØB	L
	52.00	85.00	10.00

52.00

Part No	SD305200 10000 1000		
Groove Dimension	ØA	ØB	L
	52.00	100.00	10.00

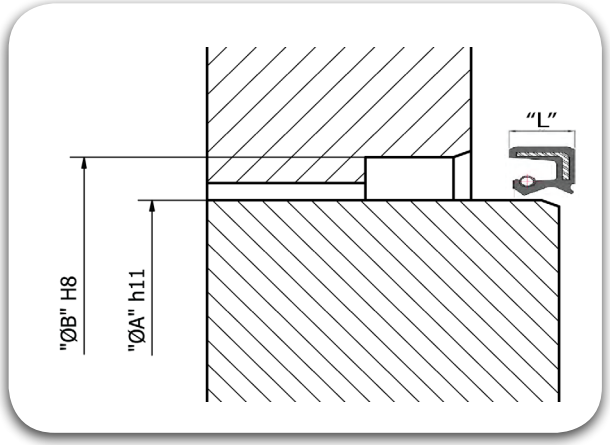

54.00

Part No	SD3 0540 07200 1000		
Groove Dimension	ØA	ØB	L
	54.00	72.00	10.00

54.00

Part No	SD3 0540 07250 0900		
Groove Dimension	ØA	ØB	L
	54.00	72.50	9.00

55.00

Part No	SD305500 06800 0800		
Groove Dimension	ØA	ØB	L
	55.00	68.00	8.00

55.00

Part No	SD305500 07000 0800		
Groove Dimension	ØA	ØB	L
	55.00	70.00	8.00

55.00

Part No	SD305500 07000 1000		
Groove Dimension	ØA	ØB	L
	55.00	70.00	10.00

55.00

Part No	SD305500 07200 0800		
Groove Dimension	ØA	ØB	L
	55.00	72.00	8.00

55.00

Part No	SD305500 07200 1000		
Groove Dimension	ØA	ØB	L
	55.00	72.00	10.00

55.00

Part No	SD305500 07500 0800		
Groove Dimension	ØA	ØB	L
	55.00	75.00	8.00

55.00

Part No	SD305500 07500 1000		
Groove Dimension	ØA	ØB	L
	55.00	75.00	10.00

55.00

Part No	SD305500 08000 0800		
Groove Dimension	ØA	ØB	L
	55.00	80.00	8.00

55.00

Part No	SD305500 08000 1000		
Groove Dimension	ØA	ØB	L
	55.00	80.00	10.00

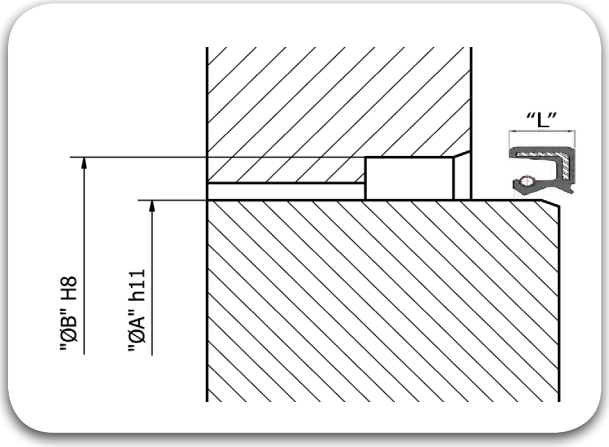

55.00

Part No	SD305500 08500 1000		
Groove Dimension	ØA	ØB	L
	55.00	85.00	10.00

55.00

Part No	SD305500 09000 0800		
Groove Dimension	ØA	ØB	L
	55.00	90.00	8.00

55.00

Part No	SD305500 09000 1000		
Groove Dimension	ØA	ØB	L
	55.00	90.00	10.00

55.00

Part No	SD305500 10000 1000		
Groove Dimension	ØA	ØB	L
	55.00	100.00	10.00

55.00

Part No	SD305500 11000 1000		
Groove Dimension	ØA	ØB	L
	55.00	110.00	10.00

56.00

Part No	SD305600 07200 0700		
Groove Dimension	ØA	ØB	L
	56.00	72.00	7.00

56.00

Part No	SD305600 07200 0800		
Groove Dimension	ØA	ØB	L
	56.00	72.00	8.00

58.00

Part No	SD305800 08000 0800		
Groove Dimension	ØA	ØB	L
	58.00	80.00	8.00

58.00

Part No	SD305800 08000 1000		
Groove Dimension	ØA	ØB	L
	58.00	80.00	10.00

60.00

Part No	SD306000 07500 0800		
Groove Dimension	ØA	ØB	L
	60.00	75.00	8.00

60.00

Part No	SD306000 07500 1000		
Groove Dimension	ØA	ØB	L
	60.00	75.00	10.00

60.00

Part No	SD306000 08000 0700		
Groove Dimension	ØA	ØB	L
	60.00	80.00	7.00

60.00

Part No	SD306000 08000 0800		
Groove Dimension	ØA	ØB	L
	60.00	80.00	8.00

60.00

Part No	SD306000 08000 1000		
Groove Dimension	ØA	ØB	L
	60.00	80.00	10.00

60.00

Part No	SD306000 08200 0900		
Groove Dimension	ØA	ØB	L
	60.00	82.00	9.00

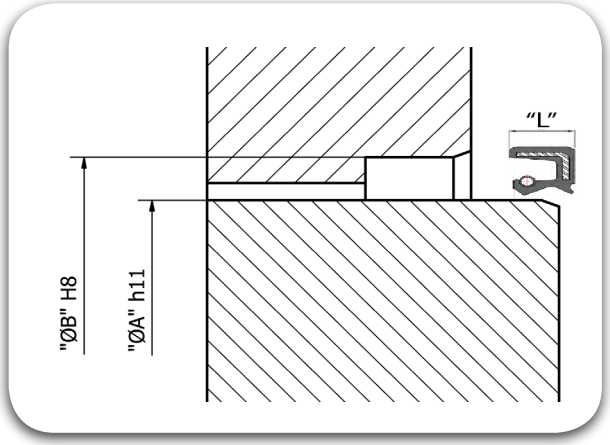

60.00

Part No	SD306000 08500 0800		
Groove Dimension	ØA	ØB	L
	60.00	85.00	8.00

60.00

Part No	SD306000 08500 1000		
Groove Dimension	ØA	ØB	L
	60.00	85.00	10.00

60.00

Part No	SD306000 08500 1200		
Groove Dimension	ØA	ØB	L
	60.00	85.00	12.00

60.00

Part No	SD306000 09000 0800		
Groove Dimension	ØA	ØB	L
	60.00	90.00	8.00

60.00

Part No	SD306000 09000 1000		
Groove Dimension	ØA	ØB	L
	60.00	90.00	10.00

60.00

Part No	SD306000 09500 1000		
Groove Dimension	ØA	ØB	L
	60.00	95.00	10.00

60.00

Part No	SD306000 11000 0800		
Groove Dimension	ØA	ØB	L
	60.00	110.00	8.00

60.00

Part No	SD306000 11000 1200		
Groove Dimension	ØA	ØB	L
	60.00	110.00	12.00

62.00

Part No	SD306200 09000 1200		
Groove Dimension	ØA	ØB	L
	62.00	90.00	12.00

62.00

Part No	SD306200 11000 1000		
Groove Dimension	ØA	ØB	L
	62.00	110.00	10.00

62.00

Part No	SD306200 12000 1200		
Groove Dimension	ØA	ØB	L
	62.00	120.00	12.00

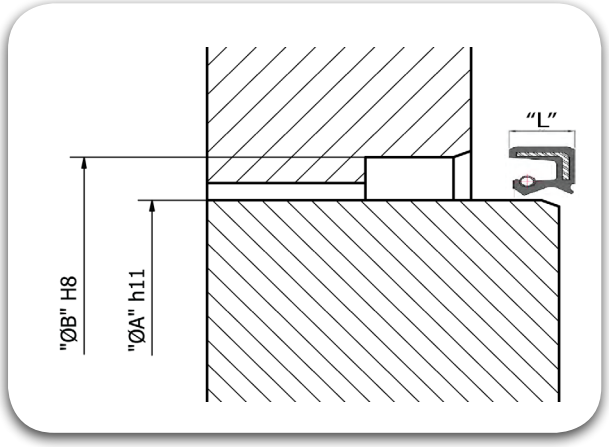

63.00

Part No	SD306300 08000 0900		
Groove Dimension	ØA	ØB	L
	63.00	80.00	9.00

65.00

Part No	SD306500 08000 0800		
Groove Dimension	ØA	ØB	L
	65.00	80.00	8.00

65.00

Part No	SD306500 08500 1000		
Groove Dimension	ØA	ØB	L
	65.00	85.00	10.00

65.00

Part No	SD306500 08500 1200		
Groove Dimension	ØA	ØB	L
	65.00	85.00	12.00

65.00

Part No	SD306500 08500 1300		
Groove Dimension	ØA	ØB	L
	65.00	85.00	13.00

65.00

Part No	SD306500 09000 1000		
Groove Dimension	ØA	ØB	L
	65.00	90.00	10.00

65.00

Part No	SD306500 09500 1000		
Groove Dimension	ØA	ØB	L
	65.00	95.00	10.00

65.00

Part No	SD306500 10000 1000		
Groove Dimension	ØA	ØB	L
	65.00	100.00	10.00

65.00

Part No	SD306500 10000 1200		
Groove Dimension	ØA	ØB	L
	65.00	100.00	12.00

65.00

Part No	SD306500 12000 1000		
Groove Dimension	ØA	ØB	L
	65.00	120.00	10.00

65.00

Part No	SD306500 12000 1200		
Groove Dimension	ØA	ØB	L
	65.00	120.00	12.00

68.00

Part No	SD306800 08700 0800		
Groove Dimension	ØA	ØB	L
	68.00	87.00	8.00

68.00

Part No	SD306800 09000 1000		
Groove Dimension	ØA	ØB	L
	68.00	90.00	10.00

68.00

Part No	SD306800 09400 0900		
Groove Dimension	ØA	ØB	L
	68.00	94.00	9.00

68.00

Part No	SD306800 11000 1300		
Groove Dimension	ØA	ØB	L
	68.00	110.00	13.00

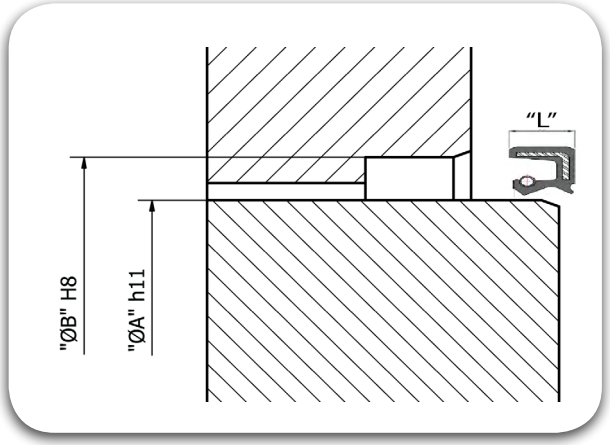

70.00

Part No	SD307000 08500 0800		
Groove Dimension	ØA	ØB	L
	70.00	85.00	8.00

70.00

Part No	SD307000 09000 1000		
Groove Dimension	ØA	ØB	L
	70.00	90.00	10.00

70.00

Part No	SD307000 09000 1200		
Groove Dimension	ØA	ØB	L
	70.00	90.00	12.00

70.00

Part No	SD307000 09500 1300		
Groove Dimension	ØA	ØB	L
	70.00	95.00	13.00

70.00

Part No	SD307000 10000 1000		
Groove Dimension	ØA	ØB	L
	70.00	100.00	10.00

70.00

Part No	SD307000 11000 0800		
Groove Dimension	ØA	ØB	L
	70.00	110.00	8.00

70.00

Part No	SD307000 11000 1200		
Groove Dimension	ØA	ØB	L
	70.00	110.00	12.00

70.00

Part No	SD307000 11000 1300		
Groove Dimension	ØA	ØB	L
	70.00	110.00	13.00

70.00

Part No	SD307000 12000 1000		
Groove Dimension	ØA	ØB	L
	70.00	120.00	10.00

70.00

Part No	SD307000 12500 1200		
Groove Dimension	ØA	ØB	L
	70.00	125.00	12.00

72.00

Part No	SD307200 08600 0700		
Groove Dimension	ØA	ØB	L
	72.00	86.00	7.00

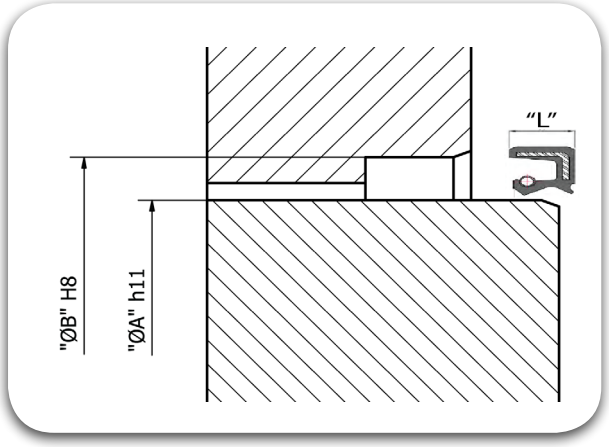

72.00

Part No	SD307200 09500 1200		
Groove Dimension	ØA	ØB	L
	72.00	95.00	12.00

72.00

Part No	SD307200 14000 1200		
Groove Dimension	ØA	ØB	L
	72.00	140.00	12.00

75.00

Part No	SD307500 09000 1000		
Groove Dimension	ØA	ØB	L
	75.00	90.00	10.00

75.00

Part No	SD307500 09500 0800		
Groove Dimension	ØA	ØB	L
	75.00	95.00	8.00

75.00

Part No	SD307500 09500 0900		
Groove Dimension	ØA	ØB	L
	75.00	95.00	9.00

75.00

Part No	SD307500 09500 1000		
Groove Dimension	ØA	ØB	L
	75.00	95.00	10.00

75.00

Part No	SD307500 09500 1200		
Groove Dimension	ØA	ØB	L
	75.00	95.00	12.00

75.00

Part No	SD307500 10000 1000		
Groove Dimension	ØA	ØB	L
	75.00	100.00	10.00

75.00

Part No	SD307500 10000 1200		
Groove Dimension	ØA	ØB	L
	75.00	100.00	12.00

75.00

Part No	SD307500 10000 1300		
Groove Dimension	ØA	ØB	L
	75.00	100.00	13.00

75.00

Part No	SD307500 11000 1300		
Groove Dimension	ØA	ØB	L
	75.00	110.00	13.00

75.00

Part No	SD307500 11500 1000		
Groove Dimension	ØA	ØB	L
	75.00	115.00	10.00

75.00

Part No	SD307500 11500 1200		
Groove Dimension	ØA	ØB	L
	75.00	115.00	12.00

75.00

Part No	SD307500 12000 1200		
Groove Dimension	ØA	ØB	L
	75.00	120.00	12.00

79.00

Part No	SD307900 12000 1300		
Groove Dimension	ØA	ØB	L
	79.00	120.00	13.00

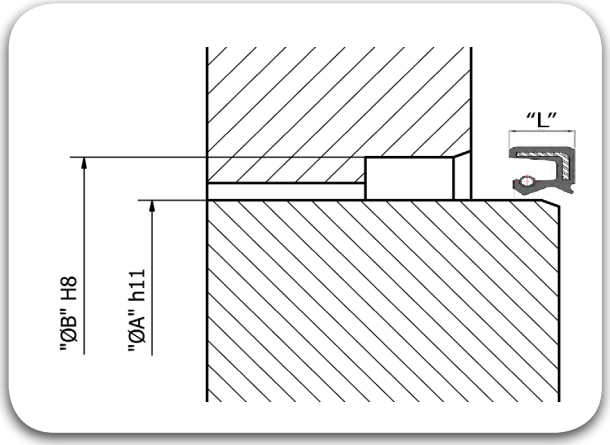

80.00

Part No	SD308000 10000 0700		
Groove Dimension	ØA	ØB	L
	80.00	100.00	7.00

80.00

Part No	SD308000 10000 1000		
Groove Dimension	ØA	ØB	L
	80.00	100.00	10.00

80.00

Part No	SD308000 10500 1300		
Groove Dimension	ØA	ØB	L
	80.00	105.00	13.00

80.00

Part No	SD308000 11000 1000		
Groove Dimension	ØA	ØB	L
	80.00	110.00	10.00

80.00

Part No	SD308000 11500 1000		
Groove Dimension	ØA	ØB	L
	80.00	115.00	10.00

80.00

Part No	SD308000 12000 1300		
Groove Dimension	ØA	ØB	L
	80.00	120.00	13.00

80.00

Part No	SD308000 14000 1300		
Groove Dimension	ØA	ØB	L
	80.00	140.00	13.00

80.00

Part No	SD308000 14000 1500		
Groove Dimension	ØA	ØB	L
	80.00	140.00	15.00

85.00

Part No	SD308500 10000 1300		
Groove Dimension	ØA	ØB	L
	85.00	100.00	13.00

85.00

Part No	SD308500 10500 1000		
Groove Dimension	ØA	ØB	L
	85.00	105.00	10.00

85.00

Part No	SD308500 10500 1200		
Groove Dimension	ØA	ØB	L
	85.00	105.00	12.00

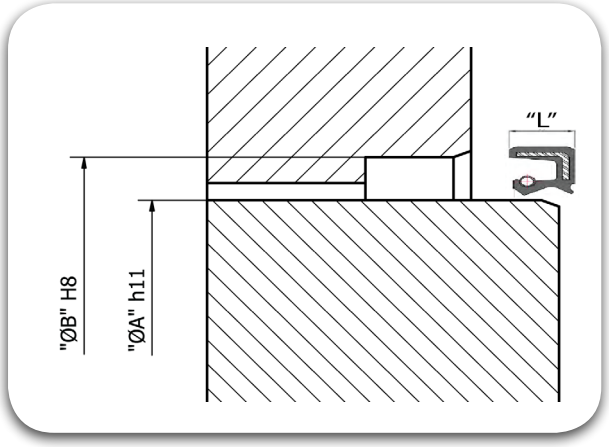

85.00

Part No	SD308500 11000 1200					
Groove Dimension	ØA	x	ØB	x	L	
	85.00		110.00		12.00	

85.00

Part No	SD308500 12000 1000					
Groove Dimension	ØA	x	ØB	x	L	
	85.00		120.00		10.00	

85.00

Part No	SD308500 12000 1200					
Groove Dimension	ØA	x	ØB	x	L	
	85.00		120.00		12.00	

85.00

Part No	SD308500 13000 1000					
Groove Dimension	ØA	x	ØB	x	L	
	85.00		130.00		10.00	

85.00

Part No	SD308500 13000 1200					
Groove Dimension	ØA	x	ØB	x	L	
	85.00		130.00		12.00	

85.00

Part No	SD308500 13000 1300					
Groove Dimension	ØA	x	ØB	x	L	
	85.00		130.00		13.00	

85.00

Part No	SD308500 14000 1200					
Groove Dimension	ØA	x	ØB	x	L	
	85.00		140.00		12.00	

85.00

Part No	SD308500 15000 1200					
Groove Dimension	ØA	x	ØB	x	L	
	85.00		150.00		12.00	

90.00

Part No	SD309000 11000 0800					
Groove Dimension	ØA	x	ØB	x	L	
	90.00		110.00		8.00	

90.00

Part No	SD309000 11000 1200					
Groove Dimension	ØA	x	ØB	x	L	
	90.00		110.00		12.00	

90.00

Part No	SD309000 11000 1300					
Groove Dimension	ØA	x	ØB	x	L	
	90.00		110.00		13.00	

90.00

Part No	SD309000 12000 1200					
Groove Dimension	ØA	x	ØB	x	L	
	90.00		120.00		12.00	

90.00

Part No	SD309000 12000 1300					
Groove Dimension	ØA	x	ØB	x	L	
	90.00		120.00		13.00	

90.00

Part No	SD309000 14000 1200
Groove Dimension	ØA 90.00 x ØB 140.00 x L 12.00

95.00

Part No	SD309500 11500 0700
Groove Dimension	ØA 95.00 x ØB 115.00 x L 70.00

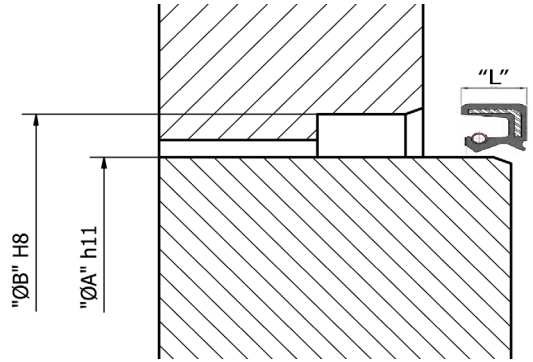

95.00

Part No	SD309500 15000 1200
Groove Dimension	ØA 95.00 x ØB 150.00 x L 12.00

95.00

Part No	SD309500 11500 1300
Groove Dimension	ØA 95.00 x ØB 115.00 x L 13.00

95.00

Part No	SD309500 12000 1200
Groove Dimension	ØA 95.00 x ØB 120.00 x L 12.00

95.00

Part No	SD309500 12000 1300
Groove Dimension	ØA 95.00 x ØB 120.00 x L 13.00

95.00

Part No	SD309500 12500 1200
Groove Dimension	ØA 95.00 x ØB 125.00 x L 12.00

95.00

Part No	SD309500 13000 1300
Groove Dimension	ØA 95.00 x ØB 130.00 x L 13.00

100.00

Part No	SD310000 12000 1000
Groove Dimension	ØA 100.00 x ØB 120.00 x L 10.00

100.00

Part No	SD310000 12000 1200
Groove Dimension	ØA 100.00 x ØB 120.00 x L 12.00

100.00

Part No	SD310000 12500 1200
Groove Dimension	ØA 100.00 x ØB 125.00 x L 12.00

100.00

Part No	SD310000 12500 1300
Groove Dimension	ØA 100.00 x ØB 125.00 x L 13.00

100.00

Part No	SD310000 13000 1200
Groove Dimension	ØA 100.00 x ØB 130.00 x L 12.00

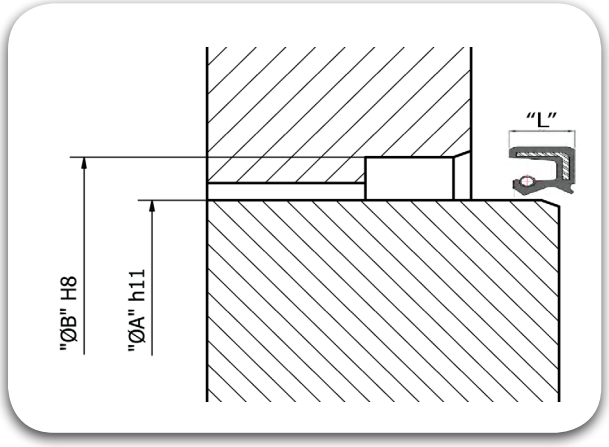

100.00

Part No	SD310000 13000 1300		
Groove Dimension	ØA	ØB	L
	100.00	130.00	13.00

100.00

Part No	SD310000 15000 1200		
Groove Dimension	ØA	ØB	L
	100.00	150.00	12.00

100.00

Part No	SD310000 16000 1400		
Groove Dimension	ØA	ØB	L
	100.00	160.00	14.00

100.00

Part No	SD310000 18000 1200		
Groove Dimension	ØA	ØB	L
	100.00	180.00	12.00

105.00

Part No	SD310500 12000 0700		
Groove Dimension	ØA	ØB	L
	105.00	120.00	7.00

105.00

Part No	SD310500 12500 1300		
Groove Dimension	ØA	ØB	L
	105.00	125.00	13.00

105.00

Part No	SD310500 13000 1200		
Groove Dimension	ØA	ØB	L
	105.00	130.00	12.00

105.00

Part No	SD310500 14000 1200		
Groove Dimension	ØA	ØB	L
	105.00	140.00	12.00

105.00

Part No	SD310500 14000 1300		
Groove Dimension	ØA	ØB	L
	105.00	140.00	13.00

110.00

Part No	SD311000 13000 1200		
Groove Dimension	ØA	ØB	L
	110.00	13.00	12.00

110.00

Part No	SD311000 14000 1200		
Groove Dimension	ØA	ØB	L
	110.00	140.00	12.00

110.00

Part No	SD311000 14000 1300		
Groove Dimension	ØA	ØB	L
	110.00	140.00	13.00

110.00

Part No	SD311000 14000 1500		
Groove Dimension	ØA	ØB	L
	110.00	140.00	15.00

110.00

Part No	SD311000 17000 1400		
Groove Dimension	ØA	ØB	L
	110.00	170.00	14.00

115.00

Part No	SD311500 14000 1200		
Groove Dimension	ØA	ØB	L
	115.00	140.00	12.00

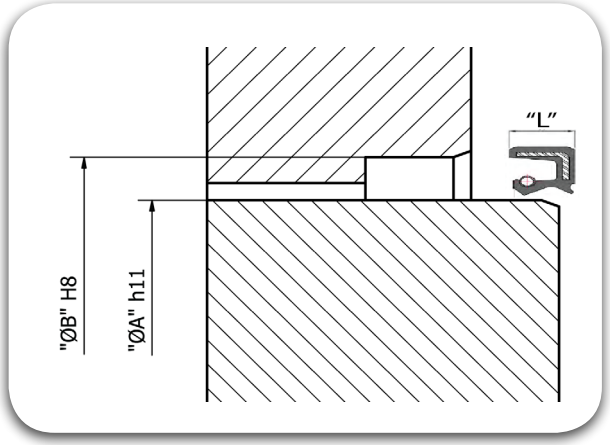

115.00

Part No	SD311500 14000 1500		
Groove Dimension	ØA	ØB	L
	115.00	140.00	15.00

118.00

Part No	SD311800 15000 1200		
Groove Dimension	ØA	ØB	L
	118.00	150.00	12.00

120.00

Part No	SD312000 14000 1300		
Groove Dimension	ØA	ØB	L
	120.00	140.00	13.00

120.00

Part No	SD312000 14200 1200		
Groove Dimension	ØA	ØB	L
	120.00	140.00	12.00

120.00

Part No	SD312000 15000 1200		
Groove Dimension	ØA	ØB	L
	120.00	150.00	12.00

120.00

Part No	SD312000 15000 1500		
Groove Dimension	ØA	ØB	L
	120.00	150.00	15.00

120.00

Part No	SD312000 16000 1200		
Groove Dimension	ØA	ØB	L
	120.00	160.00	12.00

120.00

Part No	SD312000 20000 1400		
Groove Dimension	ØA	ØB	L
	120.00	200.00	14.00

125.00

Part No	SD312500 15000 1200		
Groove Dimension	ØA	ØB	L
	125.00	150.00	12.00

125.00

Part No	SD312500 15500 1400		
Groove Dimension	ØA	ØB	L
	125.00	155.00	140.00

125.00

Part No	SD312500 16000 1500		
Groove Dimension	ØA	ØB	L
	125.00	160.00	15.00

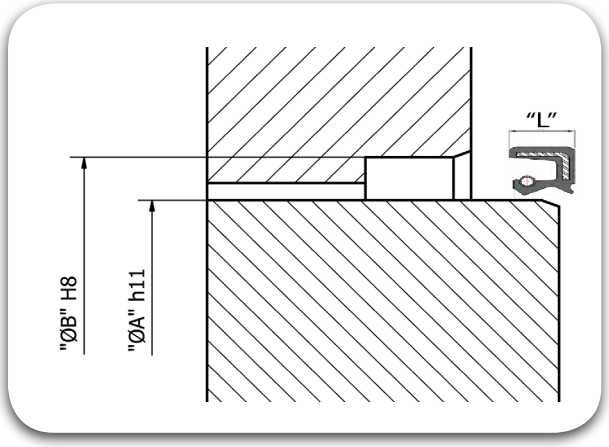

130.00

Part No	SD313000 16000 0750		
Groove Dimension	ØA	ØB	L
	130.00	160.00	7.50

130.00

Part No	SD313000 16000 1200		
Groove Dimension	ØA	ØB	L
	130.00	160.00	12.00

130.00

Part No	SD313000 16000 1500		
Groove Dimension	ØA	ØB	L
	130.00	160.00	15.00

130.00

Part No	SD313000 23000 1400		
Groove Dimension	ØA	ØB	L
	130.00	230.00	14.00

135.00

Part No	SD313500 16000 1500		
Groove Dimension	ØA	ØB	L
	135.00	160.10	15.00

135.00

Part No	SD313500 16500 1300		
Groove Dimension	ØA	ØB	L
	135.00	165.00	130.00

135.00

Part No	SD313500 17000 1200		
Groove Dimension	ØA	ØB	L
	135.00	170.00	12.00

314.00

Part No	SD314000 16000 1300		
Groove Dimension	ØA	ØB	L
	314.00	160.00	13.00

140.00

Part No	SD314000 17000 1400		
Groove Dimension	ØA	ØB	L
	140.00	170.00	14.00

140.00

Part No	SD314000 17000 1500		
Groove Dimension	ØA	ØB	L
	140.00	170.00	15.00

140.00

Part No	SD314000 21000 1500		
Groove Dimension	ØA	ØB	L
	140.00	210.00	15.00

145.00

Part No	SD314500 17500 1500		
Groove Dimension	ØA	ØB	L
	145.00	175.00	15.00

148.00

Part No	SD3 14800 17000 1400		
Groove Dimension	ØA	ØB	L
	148.00	170.00	14.00

150.00

Part No	SD315000 18000 1300		
Groove Dimension	ØA	ØB	L
	150.00	180.00	13.00

150.00

Part No	SD315000 18000 1500		
Groove Dimension	ØA	ØB	L
	150.00	180.00	15.00

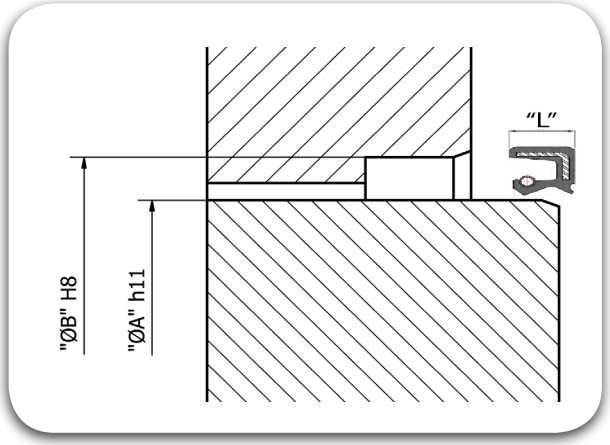

155.00

Part No	SD315500 18000 1500		
Groove Dimension	ØA	ØB	L
	155.00	180.00	15.00

160.00

Part No	SD316000 19000 1500		
Groove Dimension	ØA	ØB	L
	160.00	190.00	15.00

160.00

Part No	SD316000 20000 1500		
Groove Dimension	ØA	ØB	L
	160.00	200.00	150.00

160.00

Part No	SD316500 19000 0800		
Groove Dimension	ØA	ØB	L
	160.00	190.00	8.00

165.00

Part No	SD316500 19000 1300		
Groove Dimension	ØA	ØB	L
	165.00	190.00	13.00

170.00

Part No	SD317000 20000 0750		
Groove Dimension	ØA	ØB	L
	170.00	200.00	7.50

170.00

Part No	SD317000 20000 1500		
Groove Dimension	ØA	ØB	L
	170.00	200.00	15.00

180.00

Part No	SD318000 20000 0750		
Groove Dimension	ØA	ØB	L
	180.00	200.00	7.50

180.00

Part No	SD318000 21000 1500		
Groove Dimension	ØA	ØB	L
	180.00	210.00	15.00

180.00

Part No	SD318000 21500 1500		
Groove Dimension	ØA	ØB	L
	180.00	215.00	15.00

190.00

Part No	SD319000 22000 1200		
Groove Dimension	ØA	ØB	L
	190.00	220.00	12.00

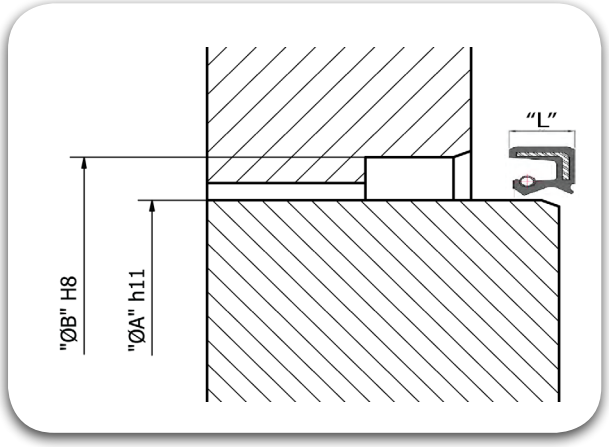

190.00

Part No	SD319000 22000 1500					
Groove Dimension	ØA	x	ØB	x	L	
	190.00		220.00		15.00	

200.00

Part No	SD320000 23000 1500					
Groove Dimension	ØA	x	ØB	x	L	
	200.00		230.00		15.00	

210.00

Part No	SD321000 24000 1500					
Groove Dimension	ØA	x	ØB	x	L	
	210.00		240.00		15.00	

220.00

Part No	SD322000 25000 1500					
Groove Dimension	ØA	x	ØB	x	L	
	220.00		250.00		15.00	

230.00

Part No	SD323000 26000 1500					
Groove Dimension	ØA	x	ØB	x	L	
	230.00		260.00		15.00	

240.00

Part No	SD324000 27000 1500					
Groove Dimension	ØA	x	ØB	x	L	
	240.00		270.00		15.00	

250.00

Part No	SD325000 28000 1500					
Groove Dimension	ØA	x	ØB	x	L	
	250.00		280.00		15.00	

260.00

Part No	SD326000 28000 1600					
Groove Dimension	ØA	x	ØB	x	L	
	260.00		280.00		16.00	

260.00

Part No	SD326000 30000 2000					
Groove Dimension	ØA	x	ØB	x	L	
	260.00		300.00		20.00	

280.00

Part No	SD328000 32000 2000					
Groove Dimension	ØA	x	ØB	x	L	
	280.00		320.00		20.00	

300.00

Part No	SD330000 34000 1800					
Groove Dimension	ØA	x	ØB	x	L	
	300.00		340.00		18.00	

300.00

Part No	SD330000 34000 2000					
Groove Dimension	ØA	x	ØB	x	L	
	300.00		340.00		20.00	

320.00

Part No	SD332000 36000 2000					
Groove Dimension	ØA	x	ØB	x	L	
	320.00		360.00		20.00	

350.00

Part No	SD335000 38000 1600		
Groove Dimension	ØA	ØB	L
	350.00	380.00	16.00

360.00

Part No	SD336000 40000 2000		
Groove Dimension	ØA	ØB	L
	360.00	400.00	20.00

394.00

Part No	SD339400 42000 1600		
Groove Dimension	ØA	ØB	L
	394.00	420.00	16.00

420.00

Part No	SD342000 47000 2000		
Groove Dimension	ØA	ØB	L
	420.00	470.00	20.00

440.00

Part No	SD344000 48000 2000		
Groove Dimension	ØA	ØB	L
	440.00	480.00	20.00

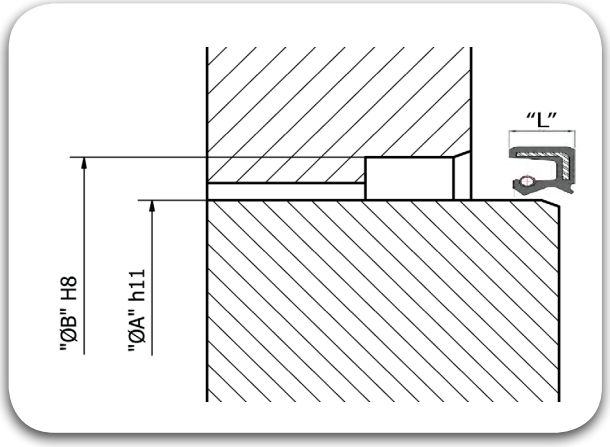

Rotary Seals

SRG

TRIADA
TECHNOLOGIES

#SealingExcellence


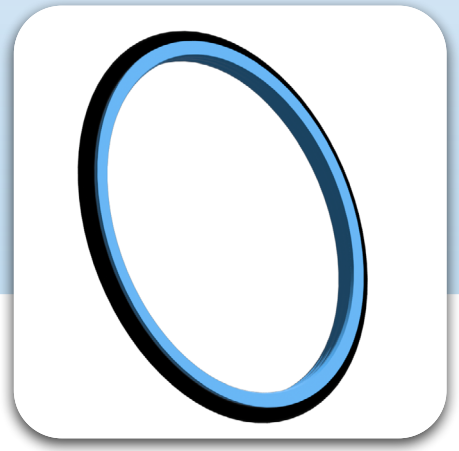

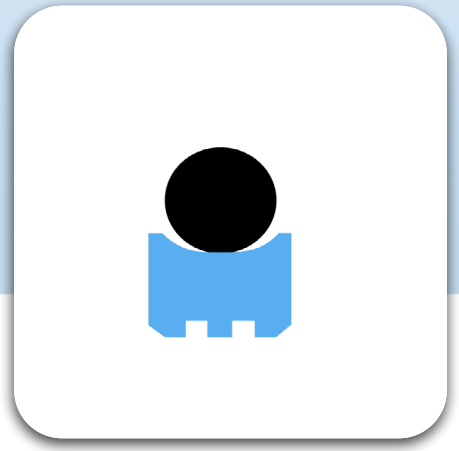

Description

The Roto TRIGLIDE® SRG is a Roto seal for rod and composed of two elements. The dynamic seal is a ring in TRIALON® (filled PTFE) while the static seal is an O-Ring in TRIAFLEX® (NBR), also acting as an energizer. Depending on the application, media, cycle speed etc., the PTFE compound is selected and the O-Ring compound is selected considering the media compatibility, temperature etc.

Diameter Range	Ø8.00 – Ø2600.00
Standard material	TRIALON® T415 (Bronze Filled PTFE) with Energiser in TRIAFLEX® T571 (NBR 70 Shores) (Other Compounds available,so as to suit the Application Conditions).
Temperature(°C)	-40° C to 200° C (Based on Elastomer Material).
Speed	< 2.00 m/s
Fluids	Hydraulic fluids (Mineral Oil based), Water, Air etc, depending on Seal Compounds selected.
Pressure	<0.50 bar

Material Details

Seal Material	Seal Material Code	O-Ring Material	O-Ring Material / Code
TRIALON® Bronze Filled PTFE	T415	TRIAFLEX® NBR 70	N (T571)
TRIALON® Carbon Filled PTFE	T417	TRIAFLEX® FKM 75	F (T675)
		TRIAFLEX® EPDM 70	E (T771)
		TRIAFLEX® HNBR 70	H (T531)

Nomenclature

Part No	SRG	1000	0890	042	T415	N
	Seal profile	Rod Dia x 10	Groove Dia x 10	Groove Width x 10	Seal-Ring Material Code	O-Ring Material Code

Groove Details

Rod Diameter "ØA"	Groove Diameter "ØB"	Groove Width "L" +0.2	Radial Clearance "E"		Radius "Z"	Chamfer Length "C"	O-Ring Cross Section	No. of notches on the Sealing Surface
			100 bar	200 bar				
6.00 - 18.90	A + 4.90	2.20	0.15	0.10	0.40	2.00	1.78	0.00
19.00 - 37.90	A + 7.50	3.20	0.20	0.15	0.60	2.50	2.62	1.00
38.00 - 199.90	A+ 11.00	4.20	0.25	0.20	1.00	3.00	3.53	1.00
200.00 - 255.90	A + 15.50	6.30	0.30	0.25	1.30	5.00	5.33	2.00
256.00 - 649.90	A + 21.00	8.10	0.30	0.25	1.80	6.00	7.00	2.00
650.00 - 999.90	A + 28.00	9.50	0.45	0.30	2.50	7.00	8.40	2.00

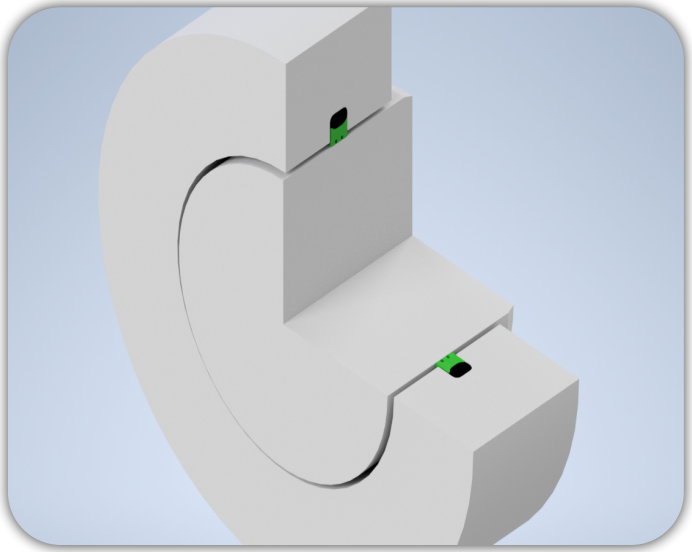

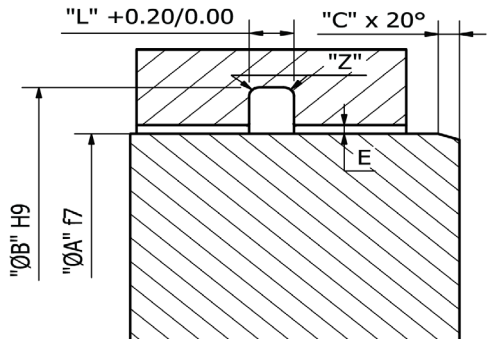

6.00

Part No	SRG 0060 0109 022					
Groove Dimension	ØA	x	ØB	x	L	
	6.00		10.90		2.20	

8.00

Part No	SRG 0080 0129 022					
Groove Dimension	ØA	x	ØB	x	L	
	8.00		12.90		2.20	

10.00

Part No	SRG 0100 0149 022					
Groove Dimension	ØA	x	ØB	x	L	
	10.00		14.90		2.20	

12.00

Part No	SRG 0120 0169 022					
Groove Dimension	ØA	x	ØB	x	L	
	12.00		16.90		2.20	

14.00

Part No	SRG 0140 0189 022					
Groove Dimension	ØA	x	ØB	x	L	
	14.00		18.90		2.20	

15.00

Part No	SRG 0150 0199 022					
Groove Dimension	ØA	x	ØB	x	L	
	15.00		19.90		2.20	

16.00

Part No	SRG 0160 0209 022					
Groove Dimension	ØA	x	ØB	x	L	
	16.00		20.90		2.20	

18.00

Part No	SRG 0180 0229 022					
Groove Dimension	ØA	x	ØB	x	L	
	18.00		22.90		2.20	

20.00

Part No	SRG 0200 0275 032					
Groove Dimension	ØA	x	ØB	x	L	
	20.00		27.50		3.20	

22.00

Part No	SRG 0220 0295 032					
Groove Dimension	ØA	x	ØB	x	L	
	22.00		29.50		3.20	

25.00

Part No	SRG 0250 0325 032					
Groove Dimension	ØA	x	ØB	x	L	
	25.00		32.50		3.20	

28.00

Part No	SRG 0280 0355 032					
Groove Dimension	ØA	x	ØB	x	L	
	28.00		35.50		3.20	

30.00

Part No	SRG 0300 0375 032					
Groove Dimension	ØA	x	ØB	x	L	
	30.00		37.50		3.20	

32.00

Part No	SRG 0320 0395 032					
Groove Dimension	ØA	x	ØB	x	L	
	32.00		39.50		3.20	

35.00

Part No	SRG 0350 0425 032					
Groove Dimension	ØA	x	ØB	x	L	
	35.00		42.50		3.20	

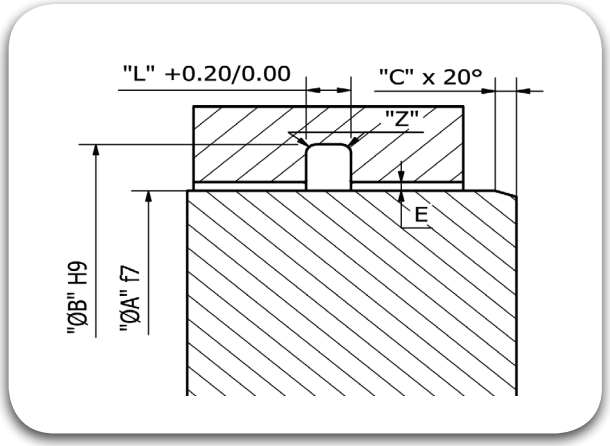

36.00

Part No	SRG 0360 0435 032					
Groove Dimension	ØA	x	ØB	x	L	
	36.00		43.50		3.20	

40.00

Part No	SRG 0400 0510 042					
Groove Dimension	ØA	x	ØB	x	L	
	40.00		51.00		4.20	

42.00

Part No	SRG 0420 0530 042					
Groove Dimension	ØA	x	ØB	x	L	
	42.00		53.00		4.20	

45.00

Part No	SRG 0450 0560 042					
Groove Dimension	ØA	x	ØB	x	L	
	45.00		56.00		4.20	

48.00

Part No	SRG 0480 0590 042					
Groove Dimension	ØA	x	ØB	x	L	
	48.00		59.00		4.20	

50.00

Part No	SRG 0500 0610 042					
Groove Dimension	ØA	x	ØB	x	L	
	50.00		61.00		4.20	

52.00

Part No	SRG 0520 0630 042					
Groove Dimension	ØA	x	ØB	x	L	
	52.00		63.00		42.00	

55.00

Part No	SRG 0550 0660 042					
Groove Dimension	ØA	x	ØB	x	L	
	55.00		66.00		4.20	

56.00

Part No	SRG 0560 0670 042					
Groove Dimension	ØA	x	ØB	x	L	
	56.00		67.00		4.20	

60.00

Part No	SRG 0600 0710 042					
Groove Dimension	ØA	x	ØB	x	L	
	60.00		71.00		4.20	

63.00

Part No	SRG 0630 0740 042					
Groove Dimension	ØA	x	ØB	x	L	
	63.00		74.00		4.20	

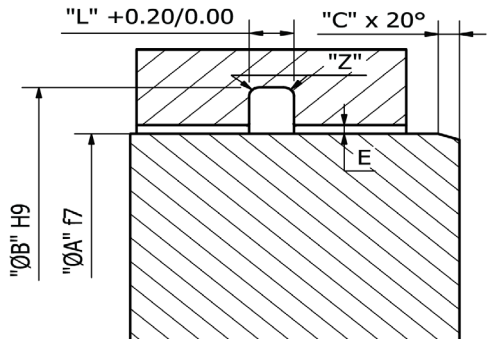

65.00

Part No	SRG 0650 0760 042					
Groove Dimension	ØA	x	ØB	x	L	
	65.00		76.00		4.20	

70.00

Part No	SRG 0700 0810 042					
Groove Dimension	ØA	x	ØB	x	L	
	70.00		81.00		4.20	

75.00

Part No	SRG 0750 0860 042					
Groove Dimension	ØA	x	ØB	x	L	
	75.00		86.00		4.20	

80.00

Part No	SRG 0800 0910 042					
Groove Dimension	ØA	x	ØB	x	L	
	80.00		91.00		4.20	

85.00

Part No	SRG 0850 0960 042					
Groove Dimension	ØA	x	ØB	x	L	
	85.00		96.00		4.20	

90.00

Part No	SRG 0900 1010 042					
Groove Dimension	ØA	x	ØB	x	L	
	90.00		101.00		4.20	

100.00

Part No	SRG 1000 1110 042					
Groove Dimension	ØA	x	ØB	x	L	
	100.00		111.00		4.20	

110.00

Part No	SRG 1100 1210 042					
Groove Dimension	ØA	x	ØB	x	L	
	110.00		121.00		4.20	

115.00

Part No	SRG 1150 1260 042					
Groove Dimension	ØA	x	ØB	x	L	
	115.00		126.00		4.20	

120.00

Part No	SRG 1200 1310 042					
Groove Dimension	ØA	x	ØB	x	L	
	120.00		131.00		4.20	

125.00

Part No	SRG 1250 1360 042					
Groove Dimension	ØA	x	ØB	x	L	
	125.00		136.00		4.20	

130.00

Part No	SRG 1300 1410 042					
Groove Dimension	ØA	x	ØB	x	L	
	130.00		141.00		4.20	

135.00

Part No	SRG 1350 1460 042					
Groove Dimension	ØA	x	ØB	x	L	
	135.00		146.00		4.20	

140.00

Part No	SRG 1400 1510 042					
Groove Dimension	ØA	x	ØB	x	L	
	140.00		151.00		4.20	

150.00

Part No	SRG 1500 1610 042					
Groove Dimension	ØA	x	ØB	x	L	
	150.00		161.00		4.20	

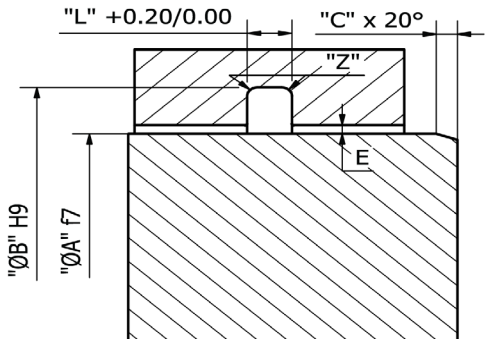

160.00

Part No	SRG 1600 1710 042					
Groove Dimension	ØA	x	ØB	x	L	
	160.00		171.00		4.20	

170.00

Part No	SRG 1700 1810 042					
Groove Dimension	ØA	x	ØB	x	L	
	170.00		181.00		4.20	

180.00

Part No	SRG 1800 1910 042					
Groove Dimension	ØA	x	ØB	x	L	
	180.00		191.00		4.20	

190.00

Part No	SRG 1900 2010 042					
Groove Dimension	ØA	x	ØB	x	L	
	190.00		201.00		4.20	

200.00

Part No	SRG 2000 2150 063					
Groove Dimension	ØA	x	ØB	x	L	
	200.00		215.00		6.30	

210.00

Part No	SRG 2100 2250 063					
Groove Dimension	ØA	x	ØB	x	L	
	210.00		225.00		6.30	

220.00

Part No	SRG 2200 2355 063					
Groove Dimension	ØA	x	ØB	x	L	
	220.00		235.50		6.30	

240.00

Part No	SRG 2400 2550 063					
Groove Dimension	ØA	x	ØB	x	L	
	240.00		255.00		6.30	

250.00

Part No	SRG 2500 2650 063					
Groove Dimension	ØA	x	ØB	x	L	
	250.00		265.00		6.30	

280.00

Part No	SRG 2800 3010 081					
Groove Dimension	ØA	x	ØB	x	L	
	280.00		301.00		8.10	

300.00

Part No	SRG 3000 3210 081					
Groove Dimension	ØA	x	ØB	x	L	
	300.00		321.00		8.10	

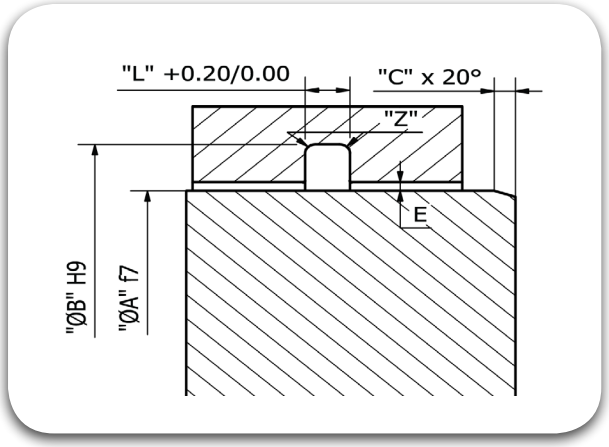

320.00

Part No	SRG 3200 3410 081					
Groove Dimension	ØA	x	ØB	x	L	
	320.00		341.00		8.10	

350.00

Part No	SRG 3500 3710 081					
Groove Dimension	ØA	x	ØB	x	L	
	350.00		371.00		8.10	

360.00

Part No	SRG 3600 3810 081					
Groove Dimension	ØA	x	ØB	x	L	
	360.00		381.00		8.10	

400.00

Part No	SRG 4000 4210 081					
Groove Dimension	ØA	x	ØB	x	L	
	400.00		421.00		8.10	

420.00

Part No	SRG 4200 4410 081					
Groove Dimension	ØA	x	ØB	x	L	
	420.00		441.00		8.10	

450.00

Part No	SRG 4500 4710 081					
Groove Dimension	ØA	x	ØB	x	L	
	450.00		471.00		8.10	

480.00

Part No	SRG 4800 5010 081					
Groove Dimension	ØA	x	ØB	x	L	
	480.00		501.00		8.10	

500.00

Part No	SRG 5000 5210 081					
Groove Dimension	ØA	x	ØB	x	L	
	500.00		521.00		8.10	

600.00

Part No	SRG 6000 6210 081					
Groove Dimension	ØA	x	ØB	x	L	
	600.00		621.00		8.10	

700.00

Part No	SRG 7000 7280 095					
Groove Dimension	ØA	x	ØB	x	L	
	700.00		728.00		9.50	

Rotary Seals

SPG

TRIADA
TECHNOLOGIES

#SealingExcellence




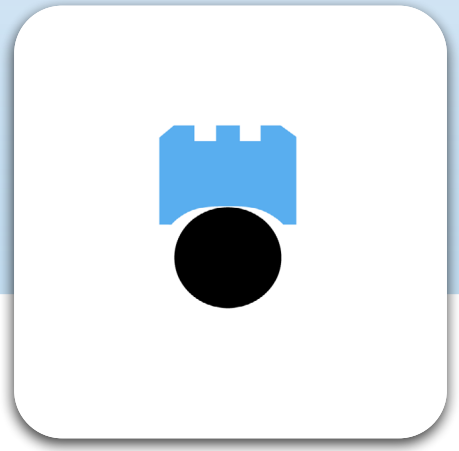

Description

The Roto TRIGLIDE® SPG is rotary seal and composed of two elements. The dynamic seal is a ring in TRIALON® (filled PTFE) while the static seal is an O-Ring in TRIAFLEX® (NBR) also acting as energizer. Depending on the application, media, cycle speed etc., the PTFE compound is selected and the O-Ring compound is selected considering the media compatibility, temperature etc.

Diameter Range	Ø8.00 – Ø2600.00
Standard material	TRIALON® T415 (Bronze Filled PTFE) with Energiser in TRIAFLEX® T571 (NBR 70 Shores) (Other Compounds available,so as to suit the Application Conditions).
Temperature(°C)	-40° C to 200° C (Based on Elastomer Material).
Speed	< 2.00 m/s
Fluids	Hydraulic fluids (Mineral Oil based), Water, Air etc, depending on Seal Compounds selected.
Pressure	< 300 bar (please consult Triada Technologies for applications above 300bar)

Material Details

Seal Material	Seal Material Code	O-Ring Material	O-Ring Material / Code
TRIALON® Bronze Filled PTFE	T415	TRIAFLEX® NBR 70	N (T571)
TRIALON® Carbon Filled PTFE	T417	TRIAFLEX® FKM 75	F (T675)
		TRIAFLEX® EPDM 70	E (T771)
		TRIAFLEX® HNBR 70	H (T531)

Nomenclature

Part No	SPG	1000	0890	042	T415	N
	Seal profile	Bore Dia x 10	Groove Dia x 10	Groove Width x 10	Seal-Ring Material Code	O-Ring Material Code

Groove Details

Bore Diameter "ØA"	Groove Diameter "ØB"	Groove Width "L" +0.2	Radial Clearance "E"		Radius "Z"	Chamfer Length "C"	O-Ring Cross Section	No. of notches on the Sealing Surface
			100 bar	200 bar				
8.00 - 39.90	A - 4.90	2.20	0.15	0.10	0.40	2.00	1.78	0.00
40.00 - 79.90	A - 7.50	3.20	0.20	0.15	0.60	2.50	2.62	1.00
80.00 - 132.90	A - 11.00	4.20	0.25	0.20	1.00	3.00	3.53	1.00
133.00 - 329.90	A - 15.50	6.30	0.30	0.25	1.30	5.00	5.33	2.00
330.00 - 699.90	A - 21.00	8.10	0.30	0.25	1.80	6.00	7.00	2.00

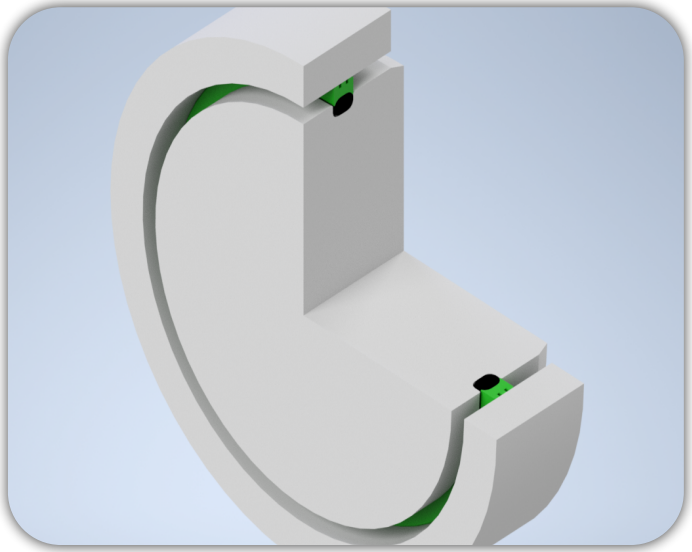

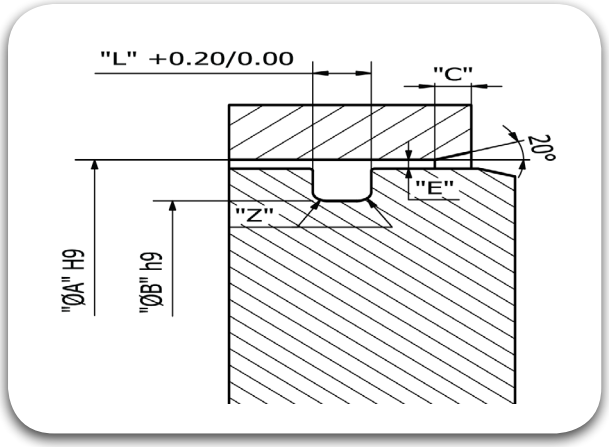

8.00

Part No	SPG 0080 0031 022					
Groove Dimension	ØA	x	ØB	x	L	
	8.00		3.10		2.20	
O-Ring Size	ID	2.90	x	C/S	1.78	

10.00

Part No	SPG 0100 0051 022					
Groove Dimension	ØA	x	ØB	x	L	
	10.00		5.10		2.20	
O-Ring Size	ID	4.80	x	C/S	1.80	

12.00

Part No	SPG 0120 0071 022					
Groove Dimension	ØA	x	ØB	x	L	
	12.00		7.10		2.20	
O-Ring Size	ID	6.70	x	C/S	1.80	

14.00

Part No	SPG 0140 0091 022					
Groove Dimension	ØA	x	ØB	x	L	
	14.00		9.10		2.20	
O-Ring Size	ID	8.75	x	C/S	1.80	

15.00

Part No	SPG 0150 0101 022					
Groove Dimension	ØA	x	ØB	x	L	
	15.00		10.10		2.20	
O-Ring Size	ID	9.25	x	C/S	1.78	

16.00

Part No	SPG 0160 0111 022					
Groove Dimension	ØA	x	ØB	x	L	
	16.00		11.10		2.20	
O-Ring Size	ID	10.82	x	C/S	1.78	

18.00

Part No	SPG 0180 0131 022					
Groove Dimension	ØA	x	ØB	x	L	
	18.00		13.10		2.20	
O-Ring Size	ID	12.42	x	C/S	1.78	

20.00

Part No	SPG 0200 0151 022					
Groove Dimension	ØA	x	ØB	x	L	
	20.00		15.10		2.20	
O-Ring Size	ID	14.00	x	C/S	1.78	

22.00

Part No	SPG 0220 0171 022					
Groove Dimension	ØA	x	ØB	x	L	
	22.00		17.10		2.20	
O-Ring Size	ID	17.17	x	C/S	1.78	

25.00

Part No	SPG 0250 0201 022					
Groove Dimension	ØA	x	ØB	x	L	
	25.00		20.10		2.20	
O-Ring Size	ID	18.77	x	C/S	1.78	

28.00

Part No	SPG 0280 0231 022					
Groove Dimension	ØA	x	ØB	x	L	
	28.00		23.10		2.20	
O-Ring Size	ID	21.95	x	C/S	1.78	

30.00

Part No	SPG 0300 0251 022					
Groove Dimension	ØA	x	ØB	x	L	
	30.00		25.10		2.20	
O-Ring Size	ID	25.12	x	C/S	1.78	

32.00

Part No	SPG 0320 0271 022					
Groove Dimension	ØA	x	ØB	x	L	
	32.00		27.10		2.20	
O-Ring Size	ID	26.70	x	C/S	1.78	

35.00

Part No	SPG 0350 0301 022						
Groove Dimension	ØA	x	ØB	x	L		
	35.00		30.10		2.20		
O-Ring Size	ID	29.87	x	C/S	1.78		

40.00

Part No	SPG 0400 0325 032						
Groove Dimension	ØA	x	ØB	x	L		
	40.00		32.50		3.20		
O-Ring Size	ID	31.42	x	C/S	2.62		

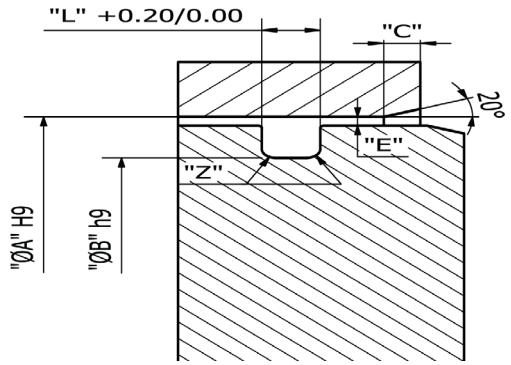

45.00

Part No	SPG 0450 0375 032						
Groove Dimension	ØA	x	ØB	x	L		
	45.00		37.50		3.20		
O-Ring Size	ID	36.17	x	C/S	2.62		

48.00

Part No	SPG 0480 0405 032						
Groove Dimension	ØA	x	ØB	x	L		
	48.00		40.50		3.20		
O-Ring Size	ID	39.34	x	C/S	2.62		

50.00

Part No	SPG 0500 0425 032						
Groove Dimension	ØA	x	ØB	x	L		
	50.00		42.50		3.20		
O-Ring Size	ID	40.94	x	C/S	2.62		

52.00

Part No	SPG 0520 0445 032						
Groove Dimension	ØA	x	ØB	x	L		
	52.00		44.50		3.20		
O-Ring Size	ID	44.12	x	C/S	2.62		

55.00

Part No	SPG 0550 0475 032						
Groove Dimension	ØA	x	ØB	x	L		
	55.00		47.50		3.20		
O-Ring Size	ID	45.69	x	C/S	2.62		

60.00

Part No	SPG 0600 0525 032						
Groove Dimension	ØA	x	ØB	x	L		
	60.00		52.50		3.20		
O-Ring Size	ID	52.07	x	C/S	2.62		

63.00

Part No	SPG 0630 0555 032						
Groove Dimension	ØA	x	ØB	x	L		
	63.00		55.50		3.20		
O-Ring Size	ID	8.00	x	C/S	3.10		

65.00

Part No	SPG 0650 0575 032						
Groove Dimension	ØA	x	ØB	x	L		
	65.00		57.50		3.20		
O-Ring Size	ID	56.82	x	C/S	2.62		

70.00

Part No	SPG 0700 0625 032						
Groove Dimension	ØA	x	ØB	x	L		
	70.00		62.50		3.20		
O-Ring Size	ID	61.60	x	C/S	2.62		

75.00

Part No	SPG 0750 0675 032						
Groove Dimension	ØA	x	ØB	x	L		
	75.00		67.50		3.20		
O-Ring Size	ID	66.34	x	C/S	2.62		

80.00

Part No	SPG 0800 0690 042						
Groove Dimension	ØA	x	ØB	x	L		
	80.00		69.00		4.20		
O-Ring Size	ID	66.27	x	C/S	3.53		

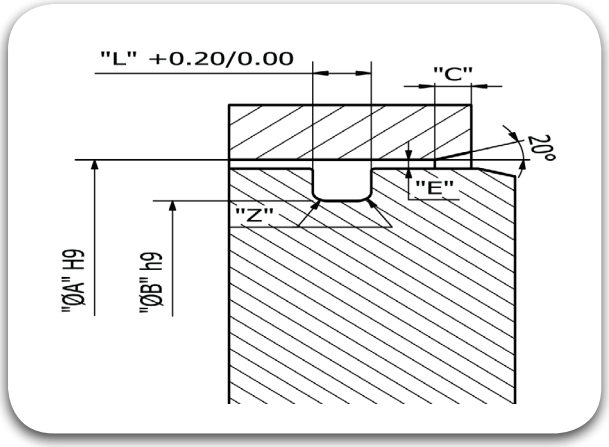

85.00

Part No	SPG 0850 0740 042					
Groove Dimension	ØA	x	ØB	x	L	
	85.00		74.00		4.20	
O-Ring Size	ID	72.62	x	C/S	3.53	

90.00

Part No	SPG 0900 0790 042					
Groove Dimension	ØA	x	ØB	x	L	
	90.00		79.00		4.20	
O-Ring Size	ID	78.97	x	C/S	3.53	

95.00

Part No	SPG 0950 0840 042					
Groove Dimension	ØA	x	ØB	x	L	
	95.00		84.00		4.20	
O-Ring Size	ID	82.14	x	C/S	3.53	

100.00

Part No	SPG 1000 0890 042					
Groove Dimension	ØA	x	ØB	x	L	
	100.00		89.00		4.20	
O-Ring Size	ID	88.49	x	C/S	3.53	

105.00

Part No	SPG 1050 0940 042					
Groove Dimension	ØA	x	ØB	x	L	
	105.00		94.00		4.20	
O-Ring Size	ID	91.67	x	C/S	3.53	

110.00

Part No	SPG 1100 0990 042					
Groove Dimension	ØA	x	ØB	x	L	
	110.00		9.90		4.20	
O-Ring Size	ID	98.02	x	C/S	3.53	

115.00

Part No	SPG 1150 1040 042					
Groove Dimension	ØA	x	ØB	x	L	
	115.00		104.00		4.20	
O-Ring Size	ID	101.19	x	C/S	3.53	

120.00

Part No	SPG 1200 1090 042					
Groove Dimension	ØA	x	ØB	x	L	
	120.00		109.00		4.20	
O-Ring Size	ID	107.54	x	C/S	3.53	

125.00

Part No	SPG 1250 1140 042					
Groove Dimension	ØA	x	ØB	x	L	
	125.00		114.00		4.20	
O-Ring Size	ID	113.89	x	C/S	3.53	

130.00

Part No	SPG 1300 1190 042					
Groove Dimension	ØA	x	ØB	x	L	
	130.00		119.00		4.20	
O-Ring Size	ID	117.07	x	C/S	3.53	

135.00

Part No	SPG 1350 1195 063					
Groove Dimension	ØA	x	ØB	x	L	
	135.00		119.00		6.30	
O-Ring Size	ID	116.84	x	C/S	5.33	

140.00

Part No	SPG 1400 1245 063					
Groove Dimension	ØA	x	ØB	x	L	
	140.00		124.50		6.30	
O-Ring Size	ID	123.19	x	C/S	5.33	

150.00

Part No	SPG 1500 1345 063					
Groove Dimension	ØA	x	ØB	x	L	
	150.00		134.50		6.30	
O-Ring Size	ID	132.72	x	C/S	5.33	

160.00

Part No	SPG 1600 1445 063				
Groove Dimension	ØA	x	ØB	x	L
	160.00		144.50		6.30
O-Ring Size	ID 142.24	x	C/S 5.33		

170.00

Part No	SPG 1700 1545 063				
Groove Dimension	ØA	x	ØB	x	L
	170.00		154.50		6.30
O-Ring Size	ID 151.77	x	C/S 5.33		

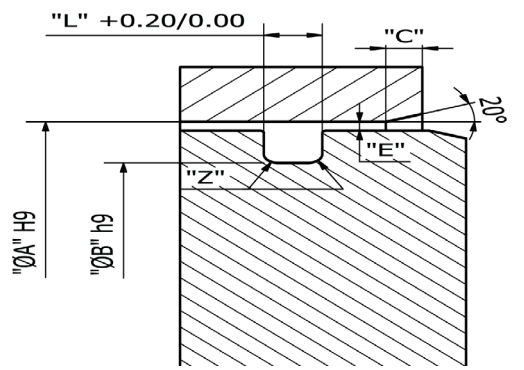

180.00

Part No	SPG 1800 1645 063				
Groove Dimension	ØA	x	ØB	x	L
	180.00		164.50		6.30
O-Ring Size	ID 164.47	x	C/S 5.33		

190.00

Part No	SPG 1900 1745 063				
Groove Dimension	ØA	x	ØB	x	L
	190.00		174.50		6.30
O-Ring Size	ID 170.82	x	C/S 5.33		

200.00

Part No	SPG 2000 1845 063				
Groove Dimension	ØA	x	ØB	x	L
	200.00		184.50		6.30
O-Ring Size	ID 183.52	x	C/S 5.33		

210.00

Part No	SPG 2100 1945 063				
Groove Dimension	ØA	x	ØB	x	L
	210.00		194.50		6.30
O-Ring Size	ID 189.87	x	C/S 5.33		

220.00

Part No	SPG 2200 2045 063				
Groove Dimension	ØA	x	ØB	x	L
	220.00		204.50		6.30
O-Ring Size	ID 202.57	x	C/S 5.33		

230.00

Part No	SPG 2300 2145 063				
Groove Dimension	ØA	x	ØB	x	L
	230.00		214.50		6.30
O-Ring Size	ID 208.92	x	C/S 5.33		

240.00

Part No	SPG 2400 2245 063				
Groove Dimension	ØA	x	ØB	x	L
	240.00		224.50		6.30
O-Ring Size	ID 221.62	x	C/S 5.33		

250.00

Part No	SPG 2500 2345 063				
Groove Dimension	ØA	x	ØB	x	L
	250.00		234.50		6.30
O-Ring Size	ID 234.32	x	C/S 5.33		

280.00

Part No	SPG 2800 2645 063				
Groove Dimension	ØA	x	ØB	x	L
	280.00		264.50		6.30
O-Ring Size	ID 266.07	x	C/S 5.33		

300.00

Part No	SPG 3000 2845 063				
Groove Dimension	ØA	x	ØB	x	L
	300.00		284.50		6.30
O-Ring Size	ID 278.77	x	C/S 5.33		

320.00

Part No	SPG 3200 3045 063				
Groove Dimension	ØA	x	ØB	x	L
	320.00		304.50		6.30
O-Ring Size	ID 304.17	x	C/S 5.33		

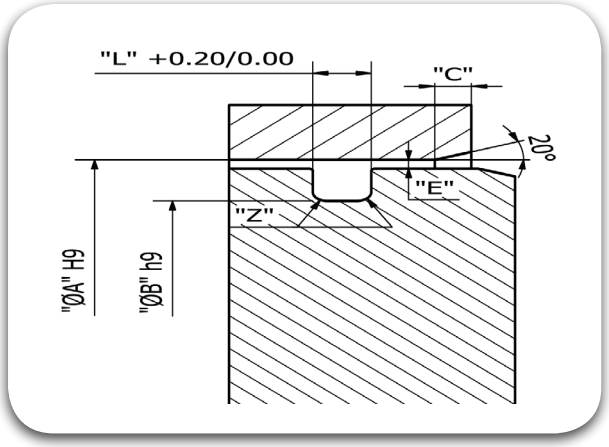

350.00

Part No	SPG 3500 3290 081						
Groove Dimension	ØA	x	ØB	x	L		
	350.00		329.00		8.10		
O-Ring Size	ID	329.57	x	C/S	7.00		

400.00

Part No	SPG 4000 3790 081						
Groove Dimension	ØA	x	ØB	x	L		
	400.00		379.00		8.10		
O-Ring Size	ID	267.67	x	C/S	7.00		

420.00

Part No	SPG 4200 3990 081						
Groove Dimension	ØA	x	ØB	x	L		
	420.00		399.00		8.10		
O-Ring Size	ID	393.07	x	C/S	7.00		

450.00

Part No	SPG 4500 4290 081						
Groove Dimension	ØA	x	ØB	x	L		
	450.00		429.00		8.10		
O-Ring Size	ID	417.96	x	C/S	7.00		

480.00

Part No	SPG 4800 4590 081						
Groove Dimension	ØA	x	ØB	x	L		
	480.00		459.00		8.10		
O-Ring Size	ID	456.06	x	C/S	7.00		

500.00

Part No	SPG 5000 4790 081						
Groove Dimension	ØA	x	ØB	x	L		
	500.00		479.00		8.10		
O-Ring Size	ID	468.76	x	C/S	7.00		

600.00

Part No	SPG 6000 5790 081						
Groove Dimension	ØA	x	ØB	x	L		
	600.00		579.00		8.10		
O-Ring Size	ID	582.68	x	C/S	7.00		

700.00

Part No	SPG 7000 6720 095						
Groove Dimension	ØA	x	ØB	x	L		
	700.00		672.00		9.50		
O-Ring Size	ID	670.00	x	C/S	7.00		

115.00

Part No	SPG 1150 1040 042						
Groove Dimension	ØA	x	ØB	x	L		
	115.00		104.00		4.20		
O-Ring Size	ID	101.19	x	C/S	3.53		

Rotary Seals

SAS

TRIADA
TECHNOLOGIES

#SealingExcellence






Description

The SAS Type of Shaft Seal with the internal sealing lip prevents the fluid from escaping the sealing chamber. In axial shaft seal the elastomer seal lip is axially spring loaded against the opposite mating face by the spider spring. The centrifugal force of fluid accelerated by the shaft reinforces the sealing effect.The axial shaft seal consists of the elastomer membrane with a metallic reinforcement ring and a metallic spider spring is used as an energizer to the sealing lip.It has to be an interference fit between the shaft & the housing for Static sealing against the shaft. The seal is generally press fitted in the housing with the sealing lip against the rotating shaft. The seal should be installed in such a way that the sealing lip is flushed by the fluid.
The seal is generally press fitted in the housing with the sealing lip against the rotating shaft. The seal should be installed in such a way that the sealing lip is flushed by the fluid.

Diameter Range	Ø12.00 – Ø350.00
Standard material	TRIAFLEX® T576 (NBR 75 Shore)
Temperature(°C)	- 40°C to 200°C (Based on elastomer)
Speed	upto 30.00 m/s
Fluids	Hydraulic fluids (Mineral Oil based), Water, Air etc, depending on Seal Compounds selected.

Material Details

Seal Material	Seal Material Code	Spring Material	Spring Material Code
TRIAFLEX® (NBR 75 Shore)	T576	Stainless Steel	S
TRIAFLEX® (FKM 75 Shore)	T676	Carbon Steel	C

Nomenclature

Part No	SAS	1000	1680	105	T576	S
	Seal profile	Rod Dia x 10	Groove Dia x 10	Groove Width x 10	Seal Material Code	Spring Material Code

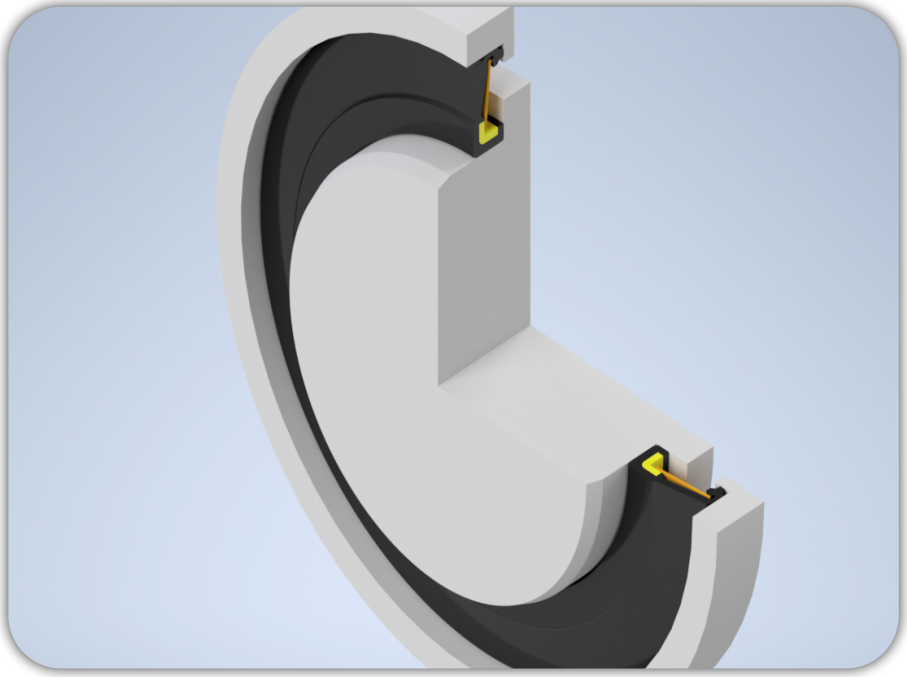

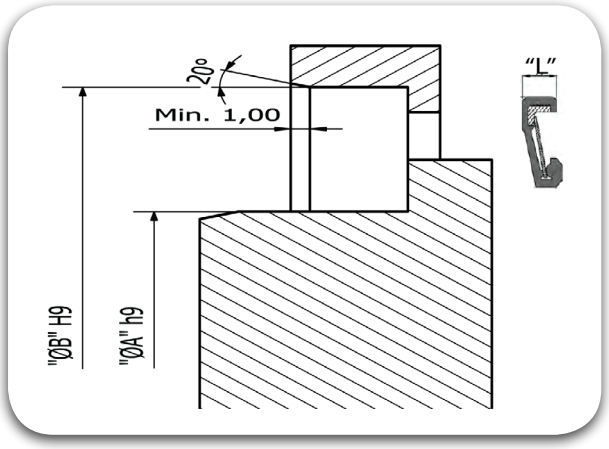

10.00

Part No	SAS 0100 0240 040					
Groove Dimension	ØA	x	ØB	x	L	
	10.00		24.00		4.00	

12.00

Part No	SAS 0120 0260 040					
Groove Dimension	ØA	x	ØB	x	L	
	12.00		26.00		4.00	

15.00

Part No	SAS 0150 0300 045					
Groove Dimension	ØA	x	ØB	x	L	
	15.00		30.00		4.50	

17.00

Part No	SAS 0170 0330 045					
Groove Dimension	ØA	x	ØB	x	L	
	17.00		33.00		4.50	

20.00

Part No	SAS 0200 0390 045					
Groove Dimension	ØA	x	ØB	x	L	
	20.00		39.00		4.50	

25.00

Part No	SAS 0250 0440 045					
Groove Dimension	ØA	x	ØB	x	L	
	25.00		44.00		4.50	

30.00

Part No	SAS 0300 0500 050					
Groove Dimension	ØA	x	ØB	x	L	
	30.00		50.00		5.00	

35.00

Part No	SAS 0350 0560 050					
Groove Dimension	ØA	x	ØB	x	L	
	35.00		56.00		5.00	

40.00

Part No	SAS 0400 0620 055					
Groove Dimension	ØA	x	ØB	x	L	
	40.00		62.00		5.50	

45.00

Part No	SAS 0450 0700 055					
Groove Dimension	ØA	x	ØB	x	L	
	45.00		70.00		5.50	

50.00

Part No	SAS 0500 0750 060					
Groove Dimension	ØA	x	ØB	x	L	
	50.00		75.00		6.00	

55.00

Part No	SAS 0550 0830 060					
Groove Dimension	ØA	x	ØB	x	L	
	55.00		83.00		6.00	

60.00

Part No	SAS 0600 0890 065					
Groove Dimension	ØA	x	ØB	x	L	
	60.00		89.00		6.50	

65.00

Part No	SAS 0650 0940 070
Groove Dimension	ØA 65.00 x ØB 94.00 x L 7.00

70.00

Part No	SAS 0700 1040 075
Groove Dimension	ØA 70.00 x ØB 104.00 x L 7.50

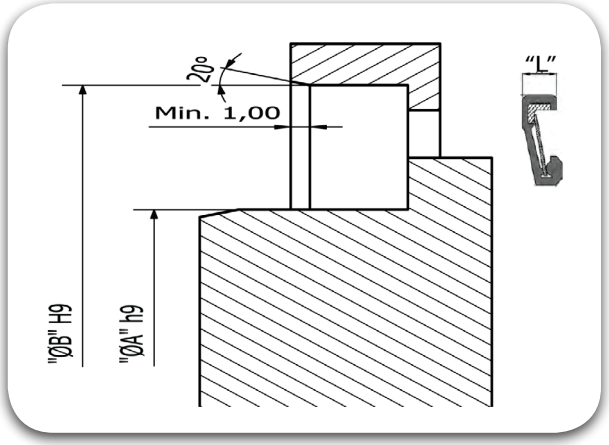

75.00

Part No	SAS 0750 1090 075
Groove Dimension	ØA 75.00 x ØB 109.00 x L 7.50

80.00

Part No	SAS 0800 1190 080
Groove Dimension	ØA 80.00 x ØB 119.00 x L 8.00

85.00

Part No	SAS 0850 1240 080
Groove Dimension	ØA 85.00 x ØB 124.00 x L 8.00

90.00

Part No	SAS 0900 1320 085
Groove Dimension	ØA 90.00 x ØB 132.00 x L 8.50

95.00

Part No	SAS 0950 1370 085
Groove Dimension	ØA 95.00 x ØB 137.00 x L 8.50

100.00

Part No	SAS 1000 1420 085
Groove Dimension	ØA 100.00 x ØB 142.00 x L 8.50

Rotary Seals

SAB

TRIADA
TECHNOLOGIES

#SealingExcellence






Description

The SAB Type of Shaft Seal with the external sealing lip is used for sealing against the grease. In axial shaft seal the elastomer seal lip is axially spring loaded against the opposite mating face by the spider spring. The axial shaft seal consists of the elastomer membrane with a metallic reinforcement ringand a metallic spider spring used as an energizer to the sealing lip. It has to be an interference fit between the housing bore and the shaft.

Diameter Range	Ø12.00 – Ø180.00
Standard material	TRIAFLEX® T576 (NBR 75 Shore)
Temperature(°C)	- 40°C to 200°C (Based on elastomer)
Speed	upto 15.00 m/s
Fluids	Hydraulic fluids (Mineral Oil based), Water, Air etc, depending on Seal Compounds selected.

Material Details

Seal Material	Seal Material Code	Spring Material	Spring Material Code
TRIAFLEX® (NBR 75 Shore)	T576	Stainless Steel	S
TRIAFLEX® (FKM 75 Shore)	T676	Carbon Steel	C

Nomenclature

Part No	SAB	1080	1470	085	T576	S
	Seal profile	Rod Dia x 10	Groove Dia x 10	Groove Width x 10	Seal Material Code	Spring Material Code

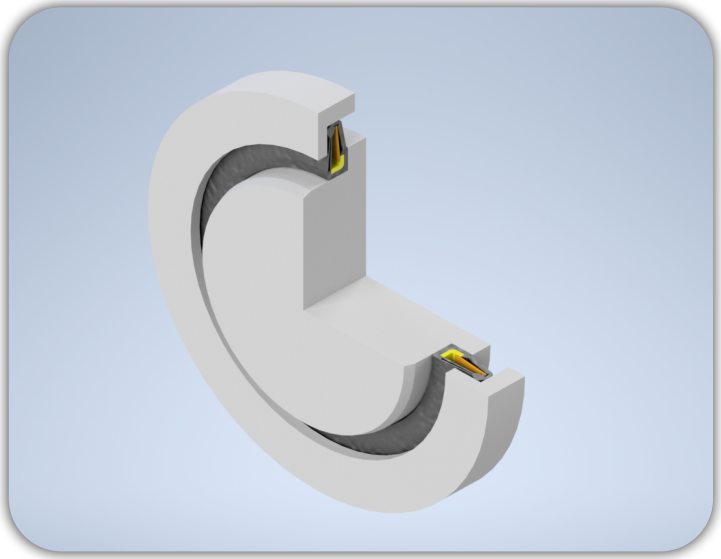

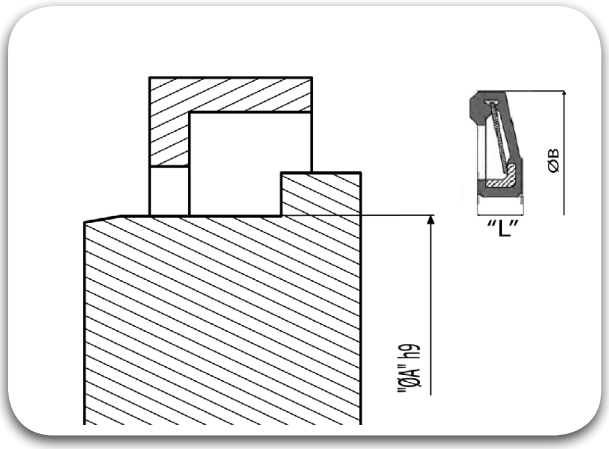

12.00

Part No	SAB 0120 0250 035					
Groove Dimension	ØA	x	ØB	x	L	
	12.00		25.00		3.50	

14.00

Part No	SAB 0140 0270 035					
Groove Dimension	ØA	x	ØB	x	L	
	14.00		27.00		3.50	

17.00

Part No	SAB 0170 0310 040					
Groove Dimension	ØA	x	ØB	x	L	
	17.00		31.00		4.00	

19.00

Part No	SAB 0190 0350 040					
Groove Dimension	ØA	x	ØB	x	L	
	19.00		35.00		4.00	

23.00

Part No	SAB 0230 0405 045					
Groove Dimension	ØA	x	ØB	x	L	
	23.00		40.50		4.50	

28.00

Part No	SAB 0280 0455 045					
Groove Dimension	ØA	x	ØB	x	L	
	28.00		45.50		4.50	

35.00

Part No	SAB 0350 0530 045					
Groove Dimension	ØA	x	ØB	x	L	
	35.00		53.00		4.50	

40.00

Part No	SAB 0400 0610 045					
Groove Dimension	ØA	x	ØB	x	L	
	40.00		61.00		4.50	

45.00

Part No	SAB 0450 0685 050					
Groove Dimension	ØA	x	ØB	x	L	
	45.00		68.50		5.00	

50.00

Part No	SAB 0500 0740 050					
Groove Dimension	ØA	x	ØB	x	L	
	50.00		74.00		5.00	

55.00

Part No	SAB 0550 0770 055					
Groove Dimension	ØA	x	ØB	x	L	
	55.00		77.00		5.50	

61.00

Part No	SAB 0610 0870 060					
Groove Dimension	ØA	x	ØB	x	L	
	61.00		87.00		6.00	

66.00

Part No	SAB 0660 0930 060					
Groove Dimension	ØA	x	ØB	x	L	
	66.00		93.00		6.00	

71.00

Part No	SAB 0710 0970 060
Groove Dimension	ØA 71.00 x ØB 97.00 x L 6.00

76.00

Part No	SAB 0760 1060 065
Groove Dimension	ØA 76.00 x ØB 106.00 x L 6.50

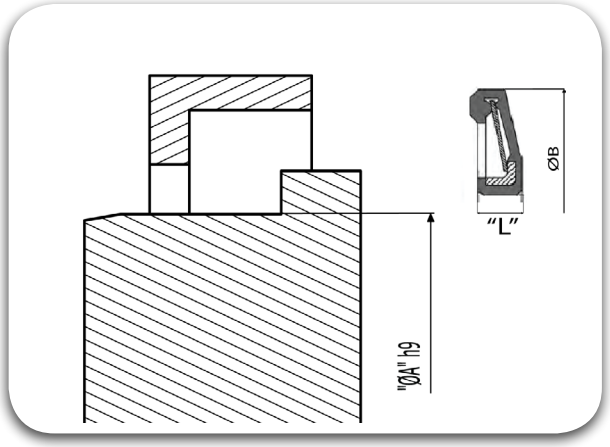

81.00

Part No	SAB 0810 1120 070
Groove Dimension	ØA 81.00 x ØB 112.00 x L 7.00

86.00

Part No	SAB 0860 1220 075
Groove Dimension	ØA 86.00 x ØB 122.00 x L 7.50

91.00

Part No	SAB 0910 1270 075
Groove Dimension	ØA 91.00 x ØB 127.00 x L 7.50

98.00

Part No	SAB 0980 1370 080
Groove Dimension	ØA 98.00 x ØB 137.00 x L 8.00

103.00

Part No	SAB 1030 1420 075
Groove Dimension	ØA 103.00 x ØB 142.00 x L 7.50

108.00

Part No	SAB 1080 1470 085
Groove Dimension	ØA 108.00 x ØB 147.00 x L 8.50

Rotary Seals

SR1

TRIADA
TECHNOLOGIES

#SealingExcellence




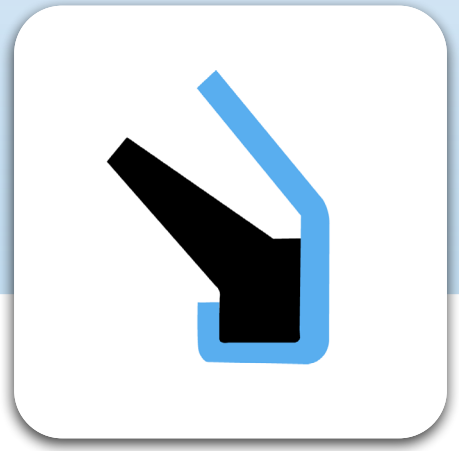

Description

The Gamma Seals (SR Seals) consists of two elements one is the metal case and the other an elastomer which acts as a sealing membrane, but both the components are not bonded to each other. The metal case provides the support and protection for the sealing membrane, the rubber sealing member is stretched and held inside the metal case by its elastic property.
The seal is press fitted on to the shaft. This seal can be installed where there is a lack of space which adds advantage to this seal over the other seals.

Diameter Range	Ø10.00 – Ø135.00
Standard material	TRIAFLEX® T576 (NBR 75 Shore)
Temperature(°C)	- 40°C to 200°C (Based on elastomer)
Speed	Upto 20.00 m/s
Fluids	Hydraulic fluids (Mineral Oil based), Water, Air etc, depending on Seal Compounds selected.

Material Details

Seal Material	Seal Material Code	Spring Material	Spring Material Code
TRIAFLEX® (NBR 75 Shore)	T576	Stainless Steel	S
TRIAFLEX® (FKM 75 Shore)	T676	Carbon Steel	C

Nomenclature

Part No	SR1	1250	1480	065	T576	S
	Seal profile	Rod Dia x 10	Seal O.D. x 10	Seal Width x 10	Elastomer Material Code	Seal Ring Material Code

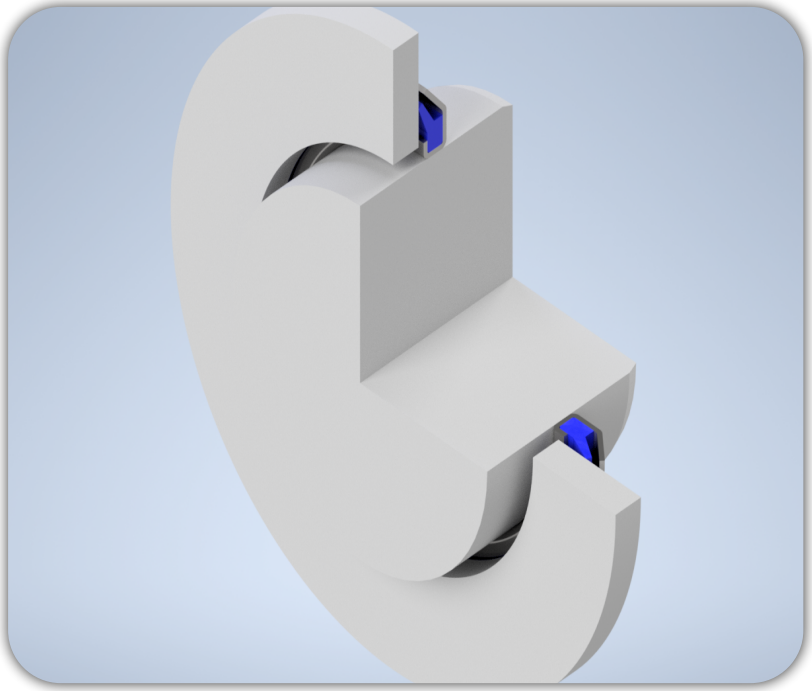

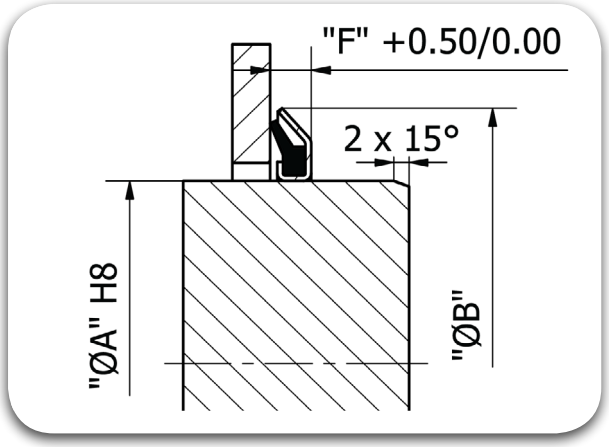

10.00

Part No	SR1 0100 0240 035					
Groove Dimension	ØA	x	ØB	x	F	
	10.00		24.00		3.50	

12.00

Part No	SR1 0120 0260 035					
Groove Dimension	ØA	x	ØB	x	F	
	12.00		26.00		3.50	

15.00

Part No	SR1 0150 0300 040					
Groove Dimension	ØA	x	ØB	x	F	
	15.00		30.00		4.00	

16.00

Part No	SR1 0160 0320 040					
Groove Dimension	ØA	x	ØB	x	F	
	16.00		32.00		4.00	

17.00

Part No	SR1 0170 0320 040					
Groove Dimension	ØA	x	ØB	x	F	
	17.00		32.00		4.00	

18.00

Part No	SR1 0180 0330 040					
Groove Dimension	ØA	x	ØB	x	F	
	18.00		33.00		4.00	

20.00

Part No	SR1 0200 0350 040					
Groove Dimension	ØA	x	ØB	x	F	
	20.00		35.00		4.00	

22.00

Part No	SR1 0220 0400 040					
Groove Dimension	ØA	x	ØB	x	F	
	22.00		40.00		4.00	

24.00

Part No	SR1 0240 0400 040					
Groove Dimension	ØA	x	ØB	x	F	
	24.00		40.00		4.00	

25.00

Part No	SR1 0250 0400 040					
Groove Dimension	ØA	x	ØB	x	F	
	25.00		40.00		4.00	

26.00

Part No	SR1 0260 0400 040					
Groove Dimension	ØA	x	ØB	x	F	
	26.00		40.00		4.00	

28.00

Part No	SR1 0280 0430 040					
Groove Dimension	ØA	x	ØB	x	F	
	28.00		43.00		4.00	

30.00

Part No	SR1 0300 0470 045					
Groove Dimension	ØA	x	ØB	x	F	
	30.00		47.00		4.50	

32.00

Part No	SR1 0320 0490 045
Groove Dimension	ØA 32.00 x ØB 49.00 x F 4.50

35.00

Part No	SR1 0350 0520 045
Groove Dimension	ØA 35.00 x ØB 52.00 x F 4.50

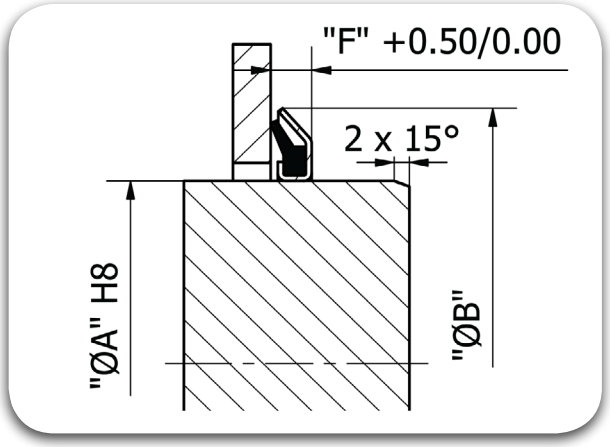

40.00

Part No	SR1 0400 0570 045
Groove Dimension	ØA 40.00 x ØB 57.00 x F 4.50

45.00

Part No	SR1 0450 0620 045
Groove Dimension	ØA 45.00 x ØB 62.00 x F 4.50

48.00

Part No	SR1 0480 0650 045
Groove Dimension	ØA 48.00 x ØB 65.00 x F 4.50

50.00

Part No	SR1 0500 0700 055
Groove Dimension	ØA 50.00 x ØB 70.00 x F 5.50

52.00

Part No	SR1 0520 0720 055
Groove Dimension	ØA 52.00 x ØB 72.00 x F 5.50

53.00

Part No	SR1 0530 0730 055
Groove Dimension	ØA 53.00 x ØB 73.00 x F 5.50

55.00

Part No	SR1 0550 0750 055
Groove Dimension	ØA 55.00 x ØB 75.00 x F 5.50

58.00

Part No	SR1 0580 0780 055
Groove Dimension	ØA 58.00 x ØB 78.00 x F 5.50

60.00

Part No	SR1 0600 0800 055
Groove Dimension	ØA 60.00 x ØB 80.00 x F 5.50

62.00

Part No	SR1 0620 0820 055
Groove Dimension	ØA 62.00 x ØB 82.00 x F 5.50

65.00

Part No	SR1 0650 0850 055
Groove Dimension	ØA 65.00 x ØB 85.00 x F 5.50

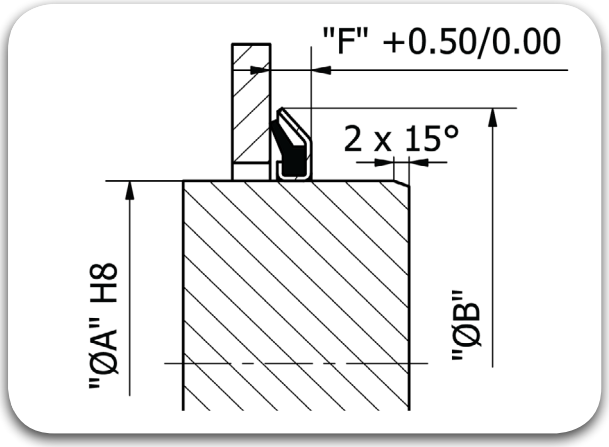

68.00

Part No	SR1 0680 0880 055					
Groove Dimension	ØA	x	ØB	x	F	
	68.00		88.00		5.50	

70.00

Part No	SR1 0700 0900 055					
Groove Dimension	ØA	x	ØB	x	F	
	70.00		90.00		5.50	

72.00

Part No	SR1 0720 0920 055					
Groove Dimension	ØA	x	ØB	x	F	
	72.00		92.00		5.50	

75.00

Part No	SR1 0750 0950 055					
Groove Dimension	ØA	x	ØB	x	F	
	75.00		95.00		5.50	

78.00

Part No	SR1 0780 0980 055					
Groove Dimension	ØA	x	ØB	x	F	
	78.00		98.00		5.50	

80.00

Part No	SR1 0800 1000 055					
Groove Dimension	ØA	x	ØB	x	F	
	80.00		100.00		5.50	

85.00

Part No	SR1 0850 1050 055					
Groove Dimension	ØA	x	ØB	x	F	
	85.00		105.00		5.50	

90.00

Part No	SR1 0900 1100 055					
Groove Dimension	ØA	x	ØB	x	F	
	90.00		110.00		5.50	

95.00

Part No	SR1 0950 1150 055					
Groove Dimension	ØA	x	ØB	x	F	
	95.00		115.00		5.50	

100.00

Part No	SR1 1000 1200 055					
Groove Dimension	ØA	x	ØB	x	F	
	100.00		120.00		5.50	

105.00

Part No	SR1 1050 1250 055					
Groove Dimension	ØA	x	ØB	x	F	
	105.00		125.00		5.50	

125.00

Part No	SR1 1250 1480 065					
Groove Dimension	ØA	x	ØB	x	F	
	125.00		148.00		6.50	

135.00

Part No	SR1 1350 1590 065					
Groove Dimension	ØA	x	ØB	x	F	
	135.00		159.00		6.50	

Rotary Seals

SR2

TRIADA
TECHNOLOGIES

#SealingExcellence




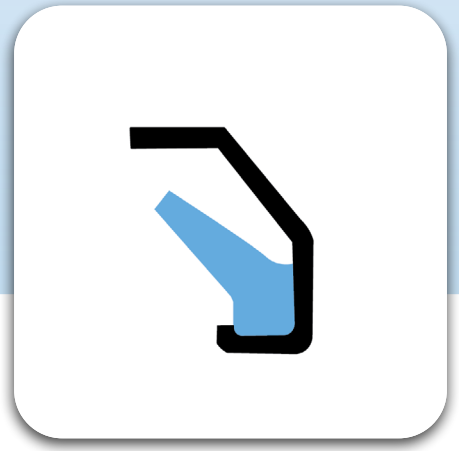

Description

The Gamma Seals (SR2) consists of two elements one is the metal case and the other an elastomer which acts as a sealing membrane, but both the components are not bonded to each other. The metal case provides the support and protection for the sealing membrane, the rubber sealing member is stretched and held inside the metal case by its elastic property. The seal is press fitted on to the shaft. This seal can be installed where there is a lack of space which adds advantage to this seal over the other seals.

Diameter Range	Ø10.00 – Ø135.00
Standard material	TRIAFLEX® T576 (NBR 75 Shore)
Temperature(°C)	- 40°C to 200°C (Based on elastomer
Speed	Upto 20.00 m/s
Fluids	Hydraulic fluids (Mineral Oil based), Water, Air etc, depending on Seal Compounds selected.

Material Details

Seal Material	Seal Material Code	Spring Material	Spring Material Code
TRIAFLEX® (NBR 75 Shore)	T576	Stainless Steel	S
TRIAFLEX® (FKM 75 Shore)	T676	Carbon Steel	C

Nomenclature

Part No	SR2	1000	1220	075	T576	S
	Seal profile	Rod Dia x 10	Seal O.D. x 10	Seal Width x 10	Elastomer Material Code	Seal Ring Material Code

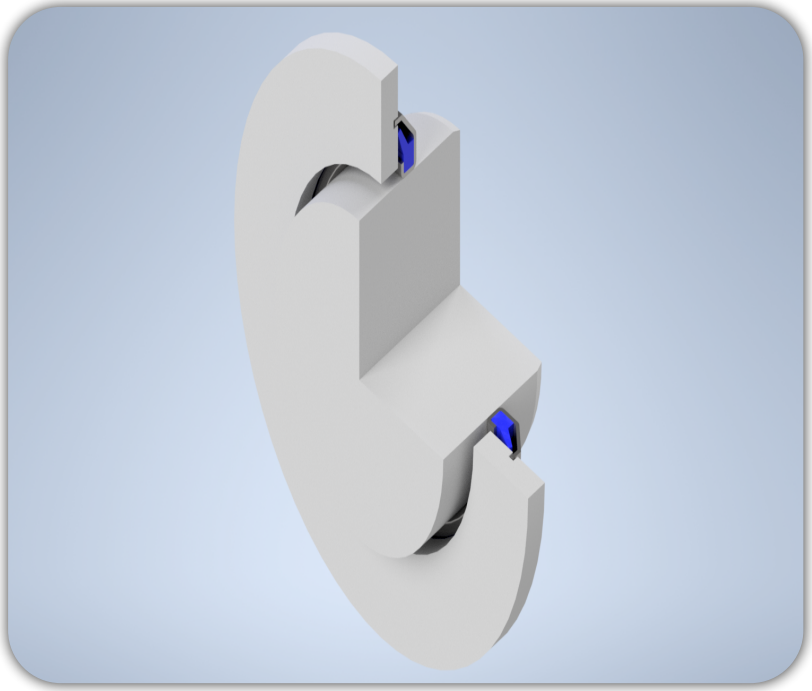

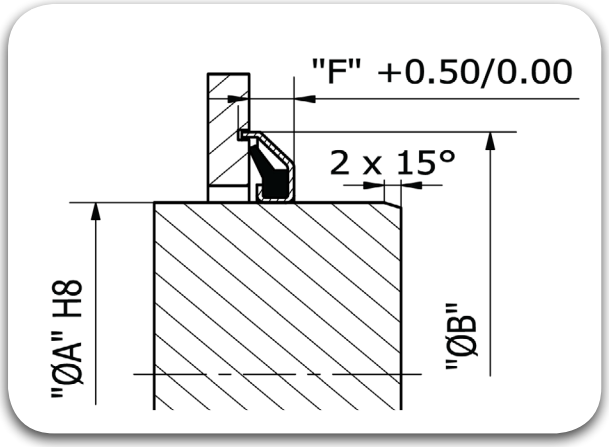

15.00

Part No	SR2 0150 0320 060		
Groove Dimension	ØA	ØB	F
	15.00	32.00	6.00

17.00

Part No	SR2 0170 0340 060		
Groove Dimension	ØA	ØB	F
	17.00	34.00	6.00

20.00

Part No	SR2 0200 0370 060		
Groove Dimension	ØA	ØB	F
	20.00	37.00	6.00

25.00

Part No	SR2 0250 0420 060		
Groove Dimension	ØA	ØB	F
	25.00	42.00	6.00

30.00

Part No	SR2 0300 0480 065		
Groove Dimension	ØA	ØB	F
	30.00	48.00	6.50

35.00

Part No	SR2 0350 0530 065		
Groove Dimension	ØA	ØB	F
	35.00	53.00	6.50

40.00

Part No	SR2 0400 0580 065		
Groove Dimension	ØA	ØB	F
	40.00	58.00	6.50

45.00

Part No	SR2 0450 0630 065		
Groove Dimension	ØA	ØB	F
	45.00	63.00	6.50

50.00

Part No	SR2 0500 0720 075		
Groove Dimension	ØA	ØB	F
	50.00	72.00	7.50

55.00

Part No	SR2 0550 0770 075		
Groove Dimension	ØA	ØB	F
	55.00	77.00	7.50

60.00

Part No	SR2 0600 0820 075		
Groove Dimension	ØA	ØB	F
	60.00	82.00	7.50

65.00

Part No	SR2 0650 0870 075		
Groove Dimension	ØA	ØB	F
	65.00	87.00	7.50

70.00

Part No	SR2 0700 0920 075		
Groove Dimension	ØA	ØB	F
	70.00	92.00	7.50

80.00

Part No	SR2 0800 1020 075				
Groove Dimension	ØA	x	ØB	x	F
	80.00		102.00		7.50

85.00

Part No	SR2 0850 1070 075				
Groove Dimension	ØA	x	ØB	x	F
	85.00		107.00		7.50

90.00

Part No	SR2 0900 1120 075				
Groove Dimension	ØA	x	ØB	x	F
	90.00		112.00		7.50

95.00

Part No	SR2 0950 1170 075				
Groove Dimension	ØA	x	ØB	x	F
	95.00		117.00		7.50

100.00

Part No	SR2 1000 1220 075				
Groove Dimension	ØA	x	ØB	x	F
	100.00		122.00		7.50

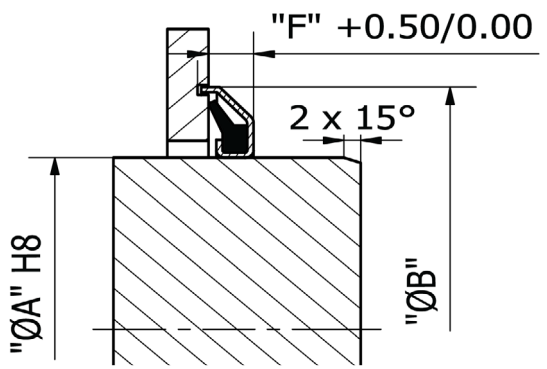

Rotary Seals

SDO

TRIADA
TECHNOLOGIES

#SealingExcellence




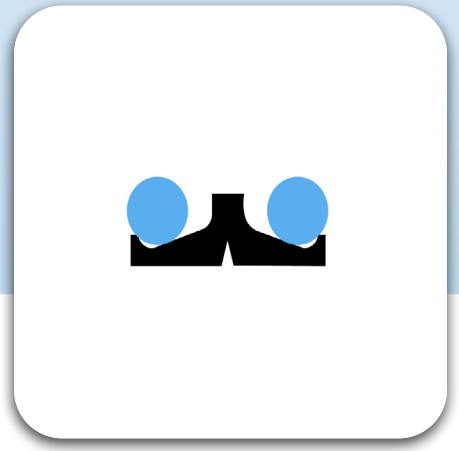

Description

Mechanical Face Seals, also known as Heavy Duty Seals, Duo-Cone Seals or Toric Seals are of two types: one is SDO type which consists of two profiled metal rings along with two energizer O-Rings and the other is the SDM type, which also consists of two L-shaped metal rings along with a profiled diamond shaped energizer.
The metal rings are assembled in the housings, which has a relative rotary motion between them. Sealing action is in between these metal rings, whose mating faces are ground and lapped. Only one half of the seal rotates, and the seal faces are kept in contact with a predetermined axial load with the help of these energizers.
Mechanical Face seals, due to its robust construction and materials used, offers a longer life, compared to other possibilities for the same application, which are tough to be sealed in normal course. These seals are thus mostly used in dirty or rough & adverse environments.
The SDO type calls for a specially machined profile even in the housing cavity, whereas the SDM fits into an easy to make square bore.

Diameter Range	Ø22.00 – Ø1300.00
Standard material	Seal Material - Shell Mold Cast Iron Energiser - TRIAFLEX® T565 (NBR 65)
Temperature(°C)	- 40°C to 200°C (Based on elastomer)
Speed	Upto 10.00 m/s with oil lubrication, upto 3.00 m/s with grease lubrication, depending on material.
Fluids	Hydraulic fluids (Mineral Oil based), Water, Air etc, depending on Seal Compounds selected.
Pressure	Pressure loading up to max. 3 bar for shell mold Cast Iron and 1.5 bar for material 100Cr6

Material Details

Seal Material	Seal Material Code	O-Ring Material	Material Code
Cast Iron (Ni Hard)	C	TRIAFLEX® NBR 65 Shore A	T565
		TRIAFLEX® FKM 65 Shore A	T665
Beaning Steel	B	TRIAFLEX® HNBR 65 Shore A	T535

Nomenclature

Part No	SDO	0300	0470	140	T576	B
	Seal profile	Rod Dia x 10	Groove Dia x 10	Seal Width x 10	Elastomer Material Code	Seal Ring Material Code

O-Ring Cross- Sesction	Gap “S” max
< 8.00	4.00
8.00 - 12.70	5.00
> 12.70	6.00

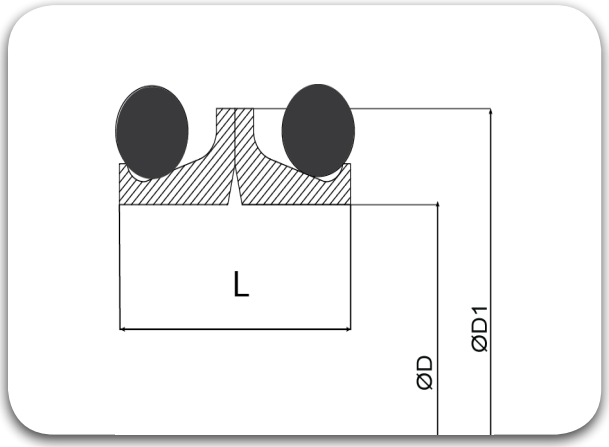

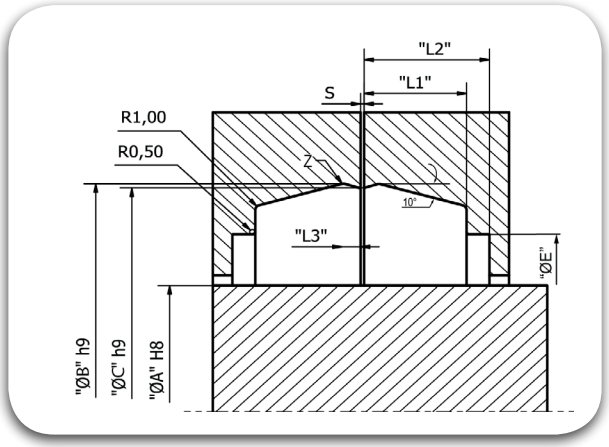

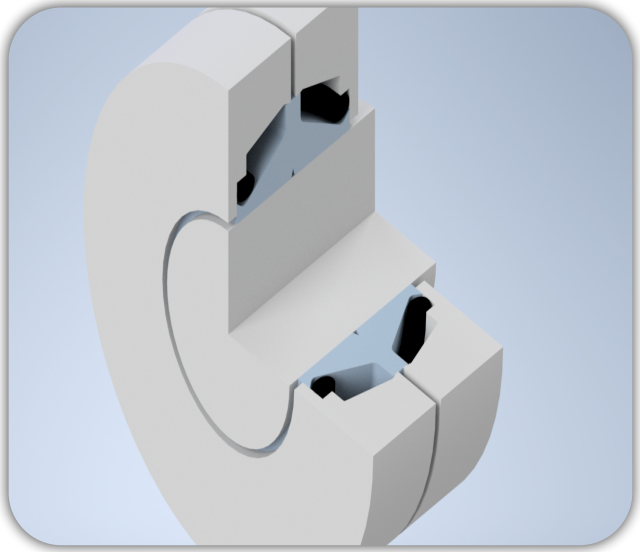

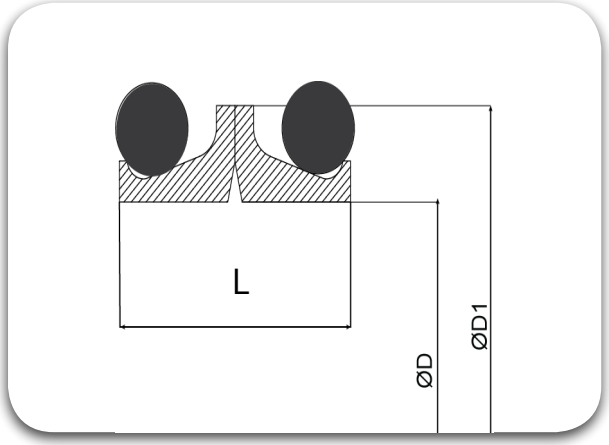

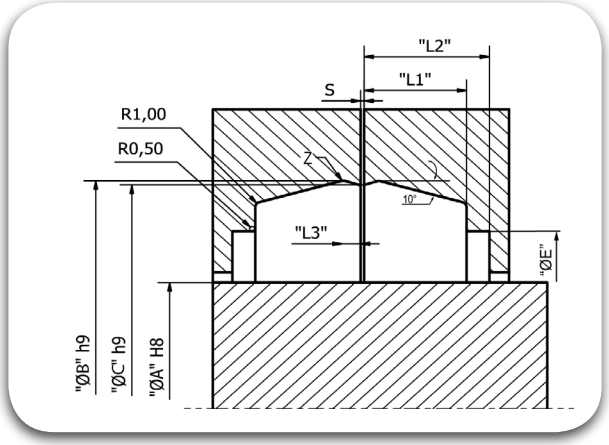

Sl. No.	TRIADA® Part Numbers	Rod Dia. "ØA"	"ØB" ±0.1	"L"	"D"	"D1"	ØC" ±0.1	"d1"	"L1"	"L2"min.	"L3"	"R"	"S"
1	SDO 0300 0470 140	30.00	47.00	14.00	34.00	45.00	46.50	42.00	6.50	8.00	1.00	1.00	1.50
2	SDO 0350 0537 204	35.00	53.70	20.40	38.00	51.00	53.00	46.00	9.00	11.00	1.80	2.00	3.00
3	SDO 0350 0520 140	35.00	52.00	14.00	39.00	50.00	51.50	46.00	6.50	8.00	1.00	1.00	1.50
4	SDO 0360 0550 200	36.00	55.00	20.00	40.00	52.00	54.20	46.00	9.00	11.00	1.00	1.00	3.00
5	SDO 0390 0616 240	39.00	61.60	24.00	43.00	58.00	60.80	53.40	10.00	12.00	1.80	2.50	3.00
6	SDO 0410 0616 216	41.00	61.60	21.60	45.00	58.00	61.00	54.00	10.50	12.50	1.80	2.50	3.00
7	SDO 0420 0616 200	42.00	61.60	20.00	46.00	59.00	61.20	53.00	9.00	11.00	2.00	2.50	3.00
8	SDO 0440 0599 144	44.00	59.90	14.40	48.00	58.00	59.40	55.00	6.30	8.00	1.50	1.70	1.50
9	SDO 0450 0680 260	45.00	68.00	26.00	48.00	62.00	67.20	58.00	12.00	14.00	2.00	3.00	3.00
10	SDO 0520 0738 220	52.00	73.80	22.00	55.50	70.00	73.10	65.50	10.00	11.50	2.40	5.00	3.00
11	SDO 0530 0760 260	53.00	76.00	26.00	56.00	70.00	75.20	66.00	12.00	14.00	2.00	2.50	3.00
12	SDO 0540 0814 356	54.00	81.40	35.60	57.00	77.50	80.70	68.50	15.20	20.90	3.50	4.80	3.00
13	SDO 0530 0792 270	53.00	79.20	27.00	58.00	75.00	78.60	66.00	12.00	14.00	2.00	2.50	3.00
14	SDO 0570 0784 206	57.00	78.40	20.60	60.00	74.00	77.40	70.00	9.00	11.00	1.90	2.50	3.00
15	SDO 0580 0758 176	58.00	75.80	17.60	61.00	73.00	75.50	66.80	6.50	7.50	1.00	1.40	3.00
16	SDO 0605 0865 318	60.50	86.50	31.80	63.50	82.50	85.70	73.50	15.20	16.80	3.50	4.80	3.00
17	SDO 0610 0846 250	61.00	84.60	25.00	64.00	78.00	83.80	74.00	12.50	14.50	2.00	3.00	3.00
18	SDO 0640 0910 318	64.00	91.00	31.80	67.50	86.50	90.00	78.00	14.50	17.00	2.80	5.00	3.00

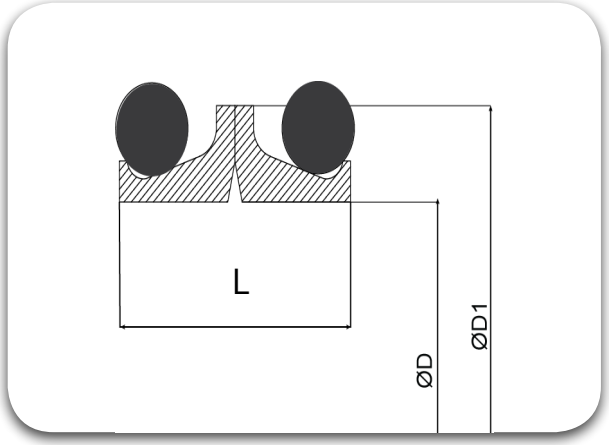

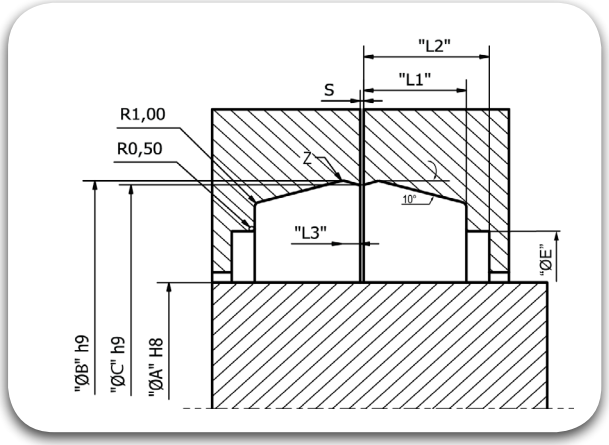

Sl. No.	TRIADA® Part Numbers	Rod Dia. "ØA"	"ØB" ±0.1	"L"	"D"	"D1"	ØC" ±0.1	"d1"	"L1"	"L2"min.	"L3"	"R"	"S"
19	SDO 0660 0896 240	66.00	89.60	24.00	69.00	84.00	88.60	78.50	11.00	13.00	1.90	3.00	3.00
20	SDO 0660 0925 240	66.00	92.50	24.00	69.00	89.00	91.50	83.00	11.00	13.50	2.80	5.00	3.00
21	SDO 0650 0955 290	65.00	95.50	29.00	70.00	90.00	94.70	84.00	13.50	15.50	2.00	3.00	3.00
22	SDO 0680 0874 200	68.00	87.40	20.00	71.00	84.00	86.70	80.80	8.50	10.00	1.80	2.00	3.00
23	SDO 0701 0960 356	70.10	96.00	35.60	72.50	92.00	95.20	83.00	15.20	20.90	3.50	4.80	3.00
24	SDO 0700 0962 318	70.00	96.20	31.80	73.00	92.00	95.40	84.00	15.00	17.00	2.80	4.00	3.00
25	SDO 0701 0960 318	70.10	96.00	31.80	73.10	91.90	95.20	83.00	15.20	16.80	3.50	4.80	3.00
26	SDO 0700 0902 204	70.00	90.20	20.40	73.50	88.50	89.40	82.00	12.70	14.30	2.20	2.80	3.00
27	SDO 0700 0914 225	70.00	91.40	22.50	74.00	86.50	90.70	80.00	9.50	11.50	2.00	3.00	3.00
28	SDO 0730 1014 290	73.00	101.40	29.00	75.00	94.00	100.60	89.00	14.50	16.50	2.00	3.00	3.00
29	SDO 0759 0907 136	75.90	90.70	13.60	77.50	87.60	90.20	89.50	7.50	8.00	1.40	1.50	3.00
30	SDO 0760 0960 200	76.00	96.00	20.00	79.50	92.50	95.30	88.00	8.50	10.50	1.80	2.00	3.00
31	SDO 0760 1041 300	76.00	104.10	30.00	80.00	100.00	103.30	93.00	15.00	18.00	2.30	2.50	3.00
32	SDO 0780 1023 280	78.00	102.30	28.00	81.00	98.00	101.30	91.00	12.50	14.50	2.80	5.00	3.00
33	SDO 0805 1073 356	80.50	107.30	35.60	82.50	102.00	106.50	94.30	15.20	20.90	3.50	4.80	3.00
34	SDO 0874 1073 260	87.40	107.30	26.00	90.00	105.00	106.70	100.40	11.50	14.00	2.90	2.80	3.00
35	SDO 0860 1125 320	86.00	112.50	32.00	90.00	109.00	111.70	104.00	14.50	17.00	3.20	3.00	3.00
36	SDO 0874 1134 318	87.40	113.40	31.80	90.40	109.40	112.70	100.40	15.20	16.80	3.50	4.80	3.00

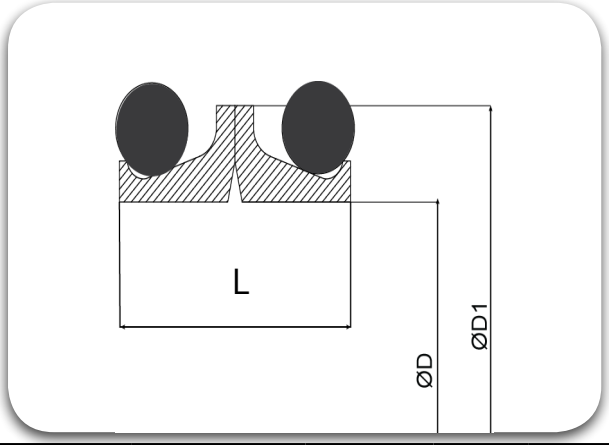

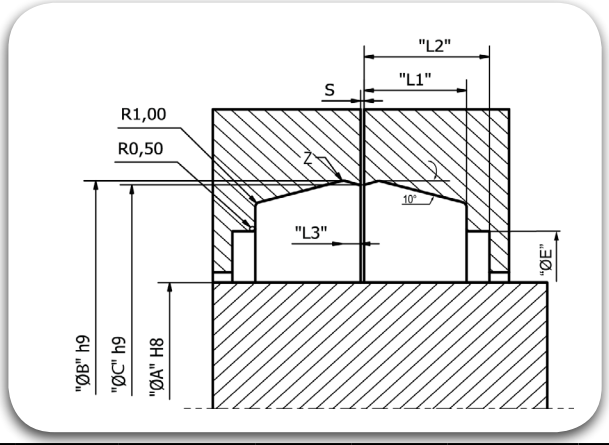

Sl. No.	TRIADA® Part Numbers	Rod Dia. "ØA"	"ØB" ±0.1	"L"	"D"	"D1"	ØC" ±0.1	"d1"	"L1"	"L2"min.	"L3"	"R"	"S"
37	SDO 0885 1134 356	88.50	113.40	35.60	90.40	109.50	112.70	100.40	15.20	20.90	3.50	4.80	3.00
38	SDO 0880 1138 220	88.00	113.80	22.00	92.00	109.50	113.00	105.00	9.50	11.50	2.00	3.00	3.00
39	SDO 0900 1116 230	90.00	111.60	23.00	94.00	106.50	110.80	102.00	9.50	11.50	2.00	3.00	3.00
40	SDO 0920 1156 240	92.00	115.60	24.00	95.00	111.00	114.80	108.00	11.00	12.50	1.80	2.00	3.00
41	SDO 0910 1200 320	91.00	120.00	32.00	95.00	114.00	119.20	107.00	15.00	17.00	2.50	3.00	3.00
42	SDO 0940 1097 136	94.90	109.70	13.60	96.50	106.80	109.20	108.50	7.50	8.00	1.40	1.50	3.00
43	SDO 0970 1230 318	97.00	123.00	31.80	100.00	119.00	122.20	110.00	15.20	16.80	3.50	4.80	3.00
44	SDO 0990 1272 320	99.00	127.20	32.00	103.00	122.00	126.20	115.00	15.50	17.50	2.50	3.00	3.00
45	SDO 1000 1210 220	100.00	121.00	22.00	104.00	117.00	120.20	107.00	9.50	11.50	2.00	3.00	3.00
46	SDO 1000 1255 225	100.00	125.50	22.50	104.00	122.50	125.10	117.50	9.50	11.50	2.00	3.00	3.00
47	SDO 1000 1285 280	100.00	128.50	28.00	104.00	125.00	127.50	117.00	12.50	14.00	2.80	5.00	3.00
48	SDO 1030 1304 240	103.00	130.40	24.00	107.00	125.00	129.40	119.50	11.00	13.50	2.80	5.00	3.00
49	SDO 1040 1365 320	104.00	136.50	32.00	109.00	132.00	135.50	124.00	15.50	17.50	2.50	3.00	3.00
50	SDO 1060 1330 320	106.00	133.00	32.00	110.00	128.00	132.00	121.00	14.50	17.00	2.50	3.00	3.00
51	SDO 1070 1325 220	107.00	132.50	22.00	111.00	128.00	132.00	123.00	10.60	12.30	2.80	3.00	3.00
52	SDO 1080 1370 320	108.00	137.00	32.00	111.00	133.00	136.50	124.50	14.50	18.00	2.80	5.00	5.00
53	SDO 1075 1341 235	107.50	134.10	23.50	114.50	129.00	133.10	126.00	10.40	11.90	2.80	5.00	3.00
54	SDO 1100 1418 310	110.00	141.80	31.00	115.00	137.00	140.80	130.00	14.50	16.50	2.50	3.00	3.00

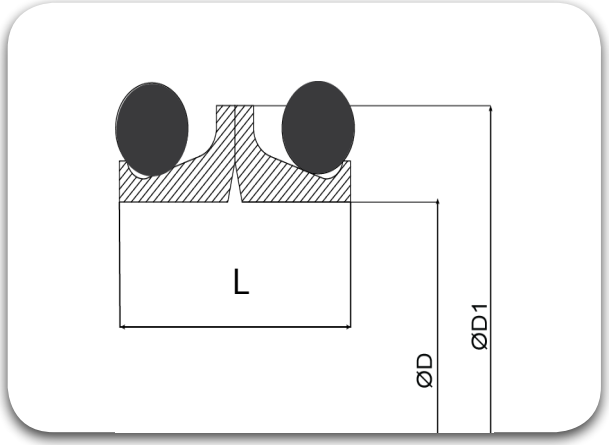

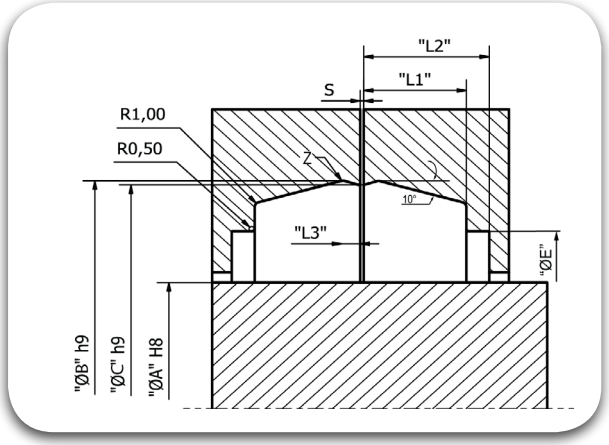

Sl. No.	TRIADA® Part Numbers	Rod Dia. "ØA"	"ØB" ±0.1	"L"	"D"	"D1"	ØC" ±0.1	"ØE"	"L1"	"L2"min.	"L3"	"Z"	"S"
55	SDO 1140 1425 318	114.00	142.50	31.80	117.00	138.00	141.50	132.00	14.50	17.00	2.80	5.00	3.00
56	SDO 1130 1425 280	113.00	142.50	28.00	117.00	140.00	141.50	132.00	12.50	14.00	2.80	5.00	3.00
57	SDO 1150 1425 280	115.00	142.50	28.00	119.00	140.00	141.50	132.00	12.50	14.00	2.80	5.00	3.00
58	SDO 1150 1430 318	115.00	143.00	31.80	120.00	139.00	142.00	129.30	14.30	17.40	3.00	5.40	3.00
59	SDO 1170 1440 318	117.00	144.00	31.80	120.00	141.00	143.00	138.00	14.50	17.50	2.80	5.00	3.00
60	SDO 1160 1490 380	116.00	149.00	38.00	120.00	142.00	148.00	133.00	17.00	19.00	2.50	3.00	4.00
61	SDO 1200 1464 220	120.00	146.40	22.00	124.00	141.00	145.30	136.00	10.60	12.30	2.80	3.00	3.00
62	SDO 1200 1485 318	120.00	148.50	31.80	125.00	144.10	147.50	136.00	14.30	17.40	3.00	5.00	3.00
63	SDO 1230 1500 318	123.00	150.00	31.80	126.00	146.00	149.20	137.00	15.20	16.80	3.50	4.80	3.00
64	SDO 1235 1438 268	123.50	143.80	26.80	126.50	139.00	143.10	136.90	11.80	14.20	2.90	2.80	3.00
65	SDO 1240 1440 290	124.00	144.00	29.00	127.00	141.00	143.00	136.00	12.00	14.50	2.80	5.00	3.00
66	SDO 1240 1438 254	124.00	143.80	25.40	127.00	141.20	143.10	136.90	11.80	14.20	2.90	2.80	3.00
67	SDO 1240 1505 318	124.00	150.50	31.80	127.00	146.00	149.50	138.00	14.50	17.50	2.80	5.00	4.00
68	SDO 1250 1556 320	125.00	155.60	32.00	130.00	150.50	154.60	144.00	14.50	16.50	2.50	5.00	3.00
69	SDO 1250 1590 385	125.00	159.00	38.50	130.00	152.00	158.00	144.00	18.50	20.50	2.50	3.00	3.00
70	SDO 1397 1597 254	139.70	159.70	25.40	142.70	156.90	158.90	152.10	11.80	14.20	2.90	2.80	3.00
71	SDO 1380 1640 270	138.00	164.00	27.00	143.00	160.00	163.00	154.00	12.00	14.50	2.80	5.00	4.00
72	SDO 1400 1600 260	140.00	160.00	26.00	144.00	157.00	159.00	154.50	12.00	14.50	2.80	5.00	3.00

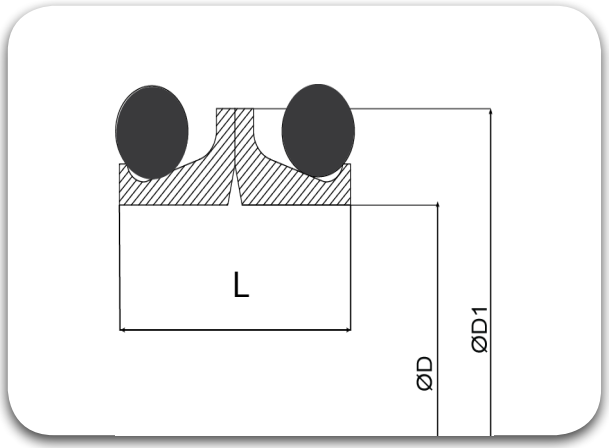

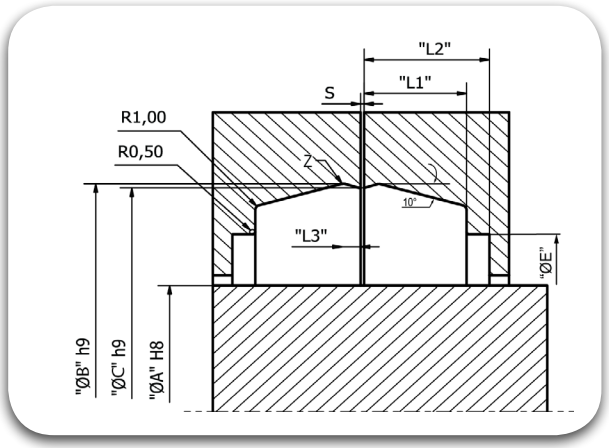

Sl. No.	TRIADA® Part Numbers	Rod Dia. "ØA"	"ØB" ±0.1	"L"	"D"	"D1"	ØC" ±0.1	"ØE"	"L1"	"L2"min.	"L3"	"Z"	"S"
73	SDO 1430 1768 380	143.00	176.80	38.00	146.00	168.00	175.90	159.00	18.00	20.50	3.00	6.50	4.00
74	SDO 1420 1805 380	142.00	180.50	38.00	146.00	175.00	179.50	162.00	17.70	20.50	3.00	6.30	6.00
75	SDO 1433 1768 380	143.30	176.80	38.00	146.30	171.70	175.90	158.90	18.40	20.30	3.70	6.30	6.00
76	SDO 1420 1710 280	142.00	171.00	28.00	147.00	167.00	170.00	160.00	13.00	15.50	2.80	5.00	3.00
77	SDO 1420 1756 310	142.00	175.60	31.00	148.00	170.00	174.60	164.00	15.00	17.00	2.50	3.00	4.00
78	SDO 1470 1790 400	147.00	179.00	40.00	150.00	172.00	178.00	165.00	18.00	20.00	2.50	2.00	4.00
79	SDO 1490 1754 320	149.00	175.40	32.00	152.00	171.50	174.70	162.50	15.20	16.80	3.50	4.80	4.00
80	SDO 1490 1763 280	149.00	176.30	28.00	153.00	171.50	175.30	164.50	12.50	14.50	2.80	5.00	3.00
81	SDO 1509 1710 254	150.90	171.00	25.40	153.90	168.10	170.20	164.00	11.80	14.20	2.90	2.80	3.00
82	SDO 1500 1710 270	150.00	171.00	27.00	154.00	168.00	170.00	162.50	12.00	14.50	2.30	3.00	3.00
83	SDO 1500 1745 220	150.00	174.50	22.00	154.00	169.00	173.50	166.00	9.20	11.00	2.30	3.00	3.00
84	SDO 1500 1751 210	150.00	175.10	21.00	154.00	170.00	174.10	167.00	9.20	10.00	2.30	3.00	3.00
85	SDO 1510 1780 320	151.00	178.00	32.00	154.00	173.50	177.00	166.00	14.50	17.00	2.80	6.50	3.00
86	SDO 1603 1968 380	160.30	196.80	38.00	163.30	191.20	195.80	178.90	18.40	20.30	3.70	6.30	6.00
87	SDO 1600 1968 460	160.00	196.80	46.00	163.30	191.30	195.90	178.90	18.40	24.10	3.70	6.30	6.00
88	SDO 1600 1935 300	160.00	193.50	30.00	164.00	189.00	192.50	179.00	14.50	17.00	2.80	5.00	3.00
89	SDO 1610 1850 270	161.00	185.00	27.00	165.00	181.00	184.00	176.50	12.00	14.50	2.70	4.00	3.00
90	SDO 1680 1927 254	168.00	192.70	25.40	172.50	190.00	191.80	188.00	12.70	14.30	2.30	2.80	3.00

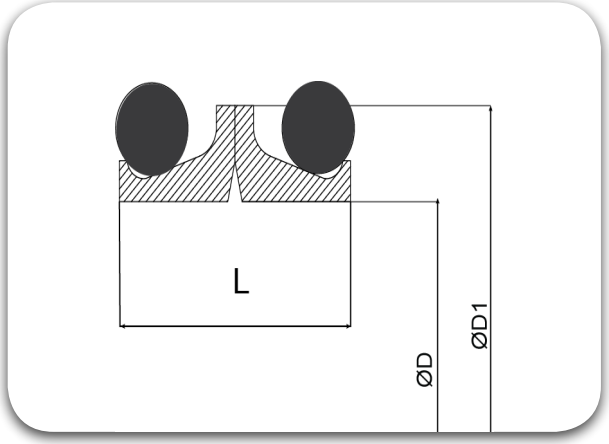

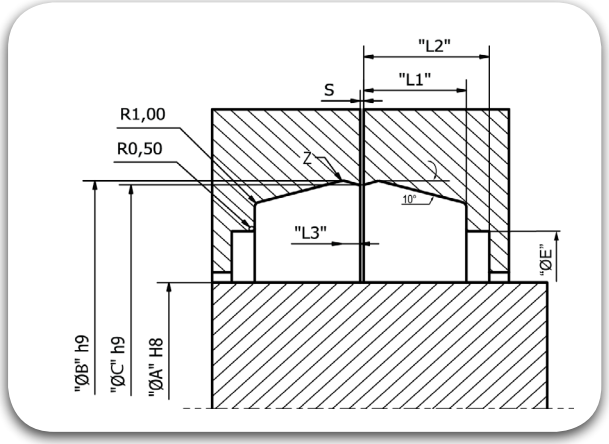

Sl. No.	TRIADA® Part Numbers	Rod Dia. "ØA"	"ØB" ±0.1	"L"	"D"	"D1"	ØC" ±0.1	"ØE"	"L1"	"L2"min.	"L3"	"Z"	"S"
91	SDO 1700 1927 254	170.00	192.70	25.40	174.00	190.00	191.80	188.00	12.70	14.30	2.30	2.80	3.00
92	SDO 1730 2045 310	173.00	204.50	31.00	177.00	200.00	203.40	191.00	14.50	17.00	3.10	5.00	3.00
93	SDO 1750 2036 320	175.00	203.60	32.00	178.00	199.00	202.40	190.00	23.00	16.00	3.00	5.00	3.00
94	SDO 1750 2106 380	175.00	210.60	38.00	178.00	200.00	209.60	192.00	19.00	21.00	3.00	4.00	4.00
95	SDO 1730 2022 214	173.00	202.20	21.40	180.00	197.40	201.90	196.00	9.40	10.60	1.20	3.00	3.00
96	SDO 1793 2154 380	179.30	215.40	38.00	182.30	210.30	214.40	197.50	18.40	20.30	3.70	6.30	6.00
97	SDO 1790 2154 460	179.00	215.40	46.00	182.40	210.30	214.40	197.50	18.40	24.10	3.70	6.30	6.00
98	SDO 1790 2060 280	179.00	206.00	28.00	183.00	202.00	205.00	195.00	12.50	14.50	2.80	5.00	3.00
99	SDO 1820 2057 254	182.00	205.70	25.40	186.00	203.00	204.90	190.50	14.50	16.00	2.30	2.80	3.00
100	SDO 1870 2140 280	187.00	214.00	28.00	191.00	210.00	213.00	203.00	12.50	14.50	2.80	5.00	3.00
101	SDO 1890 2208 330	189.00	220.80	33.00	192.00	215.00	219.80	207.00	16.50	18.50	3.00	4.00	4.00
102	SDO 1910 2210 320	191.00	221.00	32.00	195.00	216.50	220.00	207.00	14.50	17.00	2.80	5.00	3.00
103	SDO 1960 2335 380	196.00	233.50	38.00	200.00	228.50	232.50	215.50	18.00	20.50	3.10	6.30	6.00
104	SDO 1970 2249 265	197.00	224.90	26.50	202.00	222.30	224.10	217.90	11.80	14.20	2.90	2.80	3.00
105	SDO 1980 2315 300	198.00	231.50	30.00	205.00	227.00	230.50	219.00	14.50	17.00	2.80	5.00	3.00
106	SDO 2060 2426 420	206.00	242.60	42.00	209.00	234.00	241.60	224.00	19.50	22.50	3.00	4.00	4.00
107	SDO 2150 2440 320	215.00	244.00	32.00	220.00	239.50	243.00	232.00	14.50	16.50	2.80	5.00	3.00
108	SDO 2200 2566 460	220.00	256.60	46.00	223.50	251.50	255.70	238.70	18.40	24.10	3.70	6.30	6.00
109	SDO 2205 2565 380	220.5	256.5	38	223.5	251.4	255.7	238.7	18.4	20.3	3.7	6.3	6

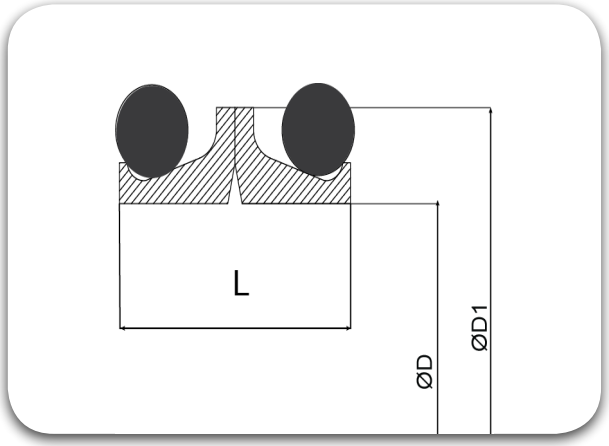

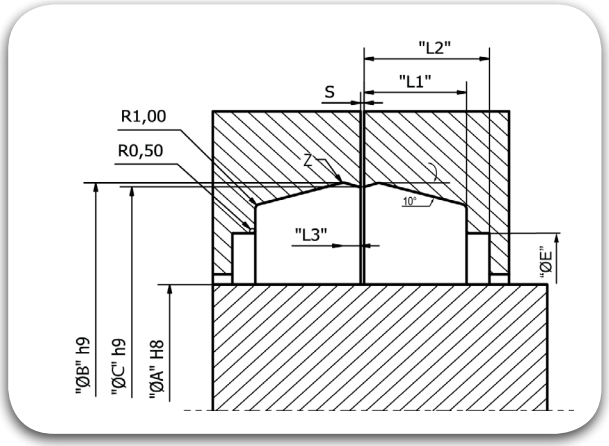

Sl. No.	TRIADA® Part Numbers	Rod Dia. "ØA"	"ØB" ±0.1	"L"	"D"	"D1"	ØC" ±0.1	"ØE"	"L1"	"L2"min.	"L3"	"Z"	"S"
110	SDO 2200 2580 380	220.00	258.00	38.00	225.00	252.00	257.00	241.00	19.00	21.00	3.00	4.00	4.00
111	SDO 2280 2647 380	228.00	264.70	38.00	231.60	259.60	263.80	247.00	18.40	20.50	3.70	6.30	6.00
112	SDO 2310 2655 320	231.00	265.50	32.00	238.00	261.00	264.50	254.00	14.50	17.00	2.80	5.00	3.00
113	SDO 2340 2472 400	234.00	274.20	40.00	239.00	268.00	273.20	257.00	20.50	22.50	3.00	4.00	4.00
114	SDO 2360 2735 380	236.00	273.50	38.00	240.00	262.80	272.50	255.50	18.00	20.50	3.10	6.50	3.00
115	SDO 2380 2689 320	238.00	268.90	32.00	245.00	264.50	267.90	255.00	14.50	17.00	2.80	5.00	3.00
116	SDO 2470 2846 440	247.00	284.60	44.00	250.00	276.00	283.60	266.00	20.50	24.00	3.00	4.00	4.00
117	SDO 2480 2855 380	248.00	285.50	38.00	252.00	280.00	284.50	265.00	18.00	20.00	3.10	6.50	3.00
118	SDO 2610 2978 460	261.00	297.80	46.00	265.00	292.80	297.00	280.00	18.40	24.10	3.70	6.30	6.00
119	SDO 2610 2980 380	261.00	298.00	38.00	265.00	293.00	297.00	280.00	18.00	20.50	3.10	6.30	4.00
120	SDO 2710 3080 380	271.00	308.00	38.00	275.00	303.00	307.00	290.00	18.00	20.50	3.10	6.50	3.00
121	SDO 2800 3163 380	280.00	316.30	38.00	282.90	310.80	315.40	298.40	18.40	20.30	3.70	6.30	6.00
122	SDO 2960 3355 380	296.00	335.50	38.00	300.00	325.00	334.50	318.00	17.50	20.50	3.10	6.50	3.00
123	SDO 2950 3330 400	295.00	333.00	40.00	300.00	328.00	332.00	315.00	18.50	21.00	3.00	4.00	4.00
124	SDO 2970 3330 380	297.00	333.00	38.00	301.00	328.00	332.10	315.10	18.40	20.30	3.70	6.30	6.00
125	SDO 3150 3515 380	315.00	351.50	38.00	318.00	341.00	350.50	334.00	18.00	20.50	3.10	6.50	3.00
126	SDO 3155 3516 380	315.50	351.60	38.00	318.50	346.40	350.70	333.70	18.40	20.30	3.70	6.30	6.00
127	SDO 3150 3515 380	315.00	351.60	46.00	319.00	346.50	350.70	333.70	18.40	24.10	3.70	6.30	6.00
128	SDO 3350 3748 400	335	374.8	40	339.5	369	373.8	358	19	21.5	3	4	4

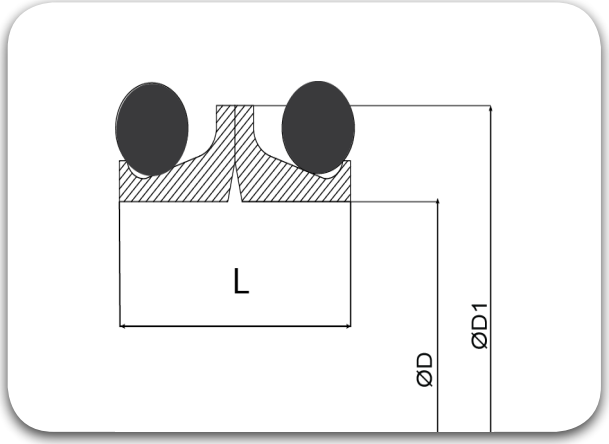

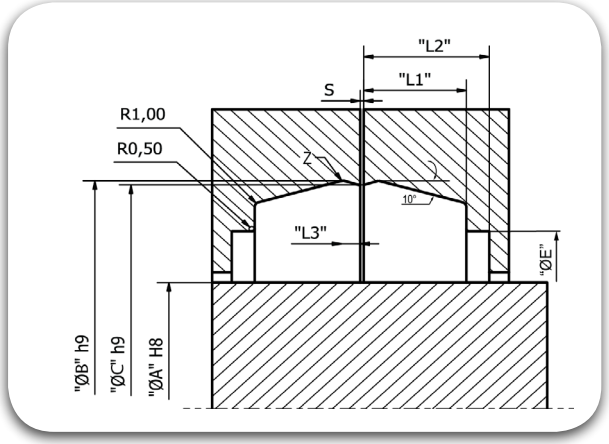

Sl. No.	TRIADA® Part Numbers	Rod Dia. "ØA"	"ØB" ±0.1	"L"	"D"	"D1"	ØC" ±0.1	"ØE"	"L1"	"L2"min.	"L3"	"Z"	"S"
129	SDO 3370 3748 400	337.00	374.80	40.00	340.00	368.00	373.80	358.00	19.00	21.50	3.00	4.00	3.00
130	SDO 3450 3850 380	345.00	385.00	38.00	350.00	375.00	384.50	368.00	17.50	20.50	3.10	6.50	3.00
131	SDO 3635 3995 380	363.50	399.50	38.00	366.50	394.40	398.60	381.70	18.40	20.30	3.70	6.30	6.00
132	SDO 3635 3995 480	363.50	399.50	48.00	366.50	394.50	398.60	381.70	18.40	24.10	3.70	6.30	6.00
133	SDO 3642 3995 380	364.20	399.50	38.00	367.20	394.50	398.60	381.70	18.40	20.30	3.70	6.30	6.00
134	SDO 3650 4035 380	365.00	403.50	38.00	370.00	398.00	402.60	385.00	17.50	20.50	3.00	6.50	3.00
135	SDO 3750 4122 400	375.00	412.20	40.00	380.50	405.00	410.50	395.00	17.00	22.00	3.00	4.00	4.00
136	SDO 3820 4203 380	382.00	420.30	38.00	387.00	415.00	419.30	402.00	17.50	20.50	3.10	6.50	3.00
137	SDO 4250 4623 370	425.00	462.30	37.00	428.50	454.00	461.30	444.60	18.50	21.00	3.00	4.00	4.00
138	SDO 4263 4623 380	426.20	462.30	38.00	429.20	457.20	461.40	444.40	18.40	20.30	3.70	6.30	6.00
139	SDO 4650 5122 500	465.00	512.20	50.00	470.00	500.00	510.20	490.00	23.50	25.50	13.00	6.00	3.00
140	SDO 5024 5385 440	502.40	538.50	44.00	505.40	533.40	537.60	520.60	21.30	26.20	3.70	6.30	6.00
141	SDO 5240 5722 500	524.00	572.20	50.00	530.00	560.00	570.20	545.00	23.50	25.50	4.00	6.00	3.00
142	SDO 5755 6130 436	575.50	613.00	43.60	580.00	608.00	611.00	596.00	19.70	21.70	4.00	6.50	6.00
143	SDO 5850 6352 500	585.00	635.20	50.00	591.00	623.00	632.10	613.00	23.50	25.50	4.00	6.00	5.00
144	SDO 6600 7056 440	660.00	705.60	44.00	667.00	700.00	704.60	687.60	18.40	23.40	3.70	6.30	6.00
145	SDO 7000 7622 500	700.00	762.20	50.00	710.00	750.00	760.20	740.00	23.50	25.50	4.00	6.00	3.00
146	SDO 8150 8916 800	815.00	891.60	80.00	830.00	886.00	890.60	860.00	34.50	39.50	4.40	10.00	17.00

Rotary Seals

SDM

TRIADA
TECHNOLOGIES

#SealingExcellence




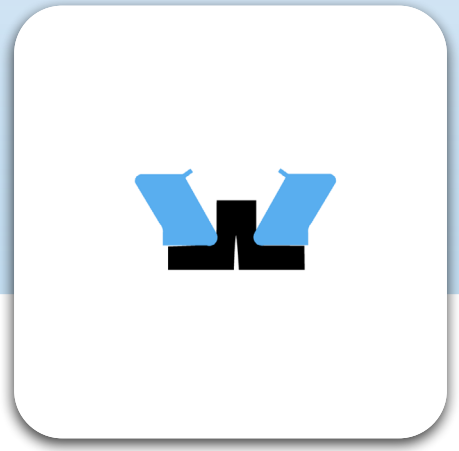

Description

Mechanical Face Seals, also known as Heavy Duty Seals, Duo-Cone Seals or Toric Seals are of two types: one is SDO type which consists of two profiled metal rings along with two energizer O-Rings and the other is the SDM type, which also consists of two L-shaped metal rings along with a profiled diamond shaped energizer.
The metal rings are assembled in the housings, which has a relative rotary motion between them. Sealing action is in between these metal rings, whose mating faces are ground and lapped. Only one half of the seal rotates, and the seal faces are kept in contact with a predetermined axial load with the help of these energizers.
Mechanical Face seals, due to its robust construction and materials used, offers a longer life, compared to other possibilities for the same application, which are tough to be sealed in normal course. These seals are thus mostly used in dirty or rough & adverse environments.
The SDO type calls for a specially machined profile even in the housing cavity, whereas the SDM fits into an easy to make square bore.

Diameter Range	Ø22.00 – Ø1300.00
Standard material	Seal Material - Shell Mold Cast Iron Energiser - TRIAFLEX® T565 (NBR 65)
Temperature(°C)	- 40° C to + 200° C (Based on elastomer)
Speed	Upto 10.00 m/s with oil lubrication, upto 3.00 m/s with grease lubrication, depending on material.
Fluids	Hydraulic fluids (Mineral Oil based), Water, Air etc, depending on Seal Compounds selected.
Pressure	Pressure loading up to max. 3 bar for shell mold Cast Iron and 1.5 bar for material 100Cr6

Material Details

Seal Material	Seal Material Code	O-Ring Material	Material Code
Cast Iron (Ni Hard)	C	TRIAFLEX® NBR 65 Shore A	T565
		TRIAFLEX® FKM 65 Shore A	T665
Beaning Steel	B	TRIAFLEX® HNBR 65 Shore A	T535

Nomenclature

Part No	SDM	0380	0650	200	T565	B
	Seal profile	Rod Dia x 10	Groove Dia x 10	Seal Width x 10	Elastomer Material Code	Seal Ring Material Code

O-Ring Cross- Sesction	Gap “S” max
< 8.00	4.00
8.00 - 12.70	5.00
> 12.70	6.00

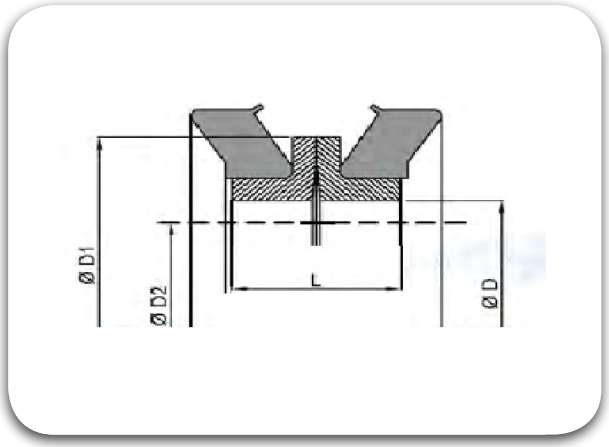

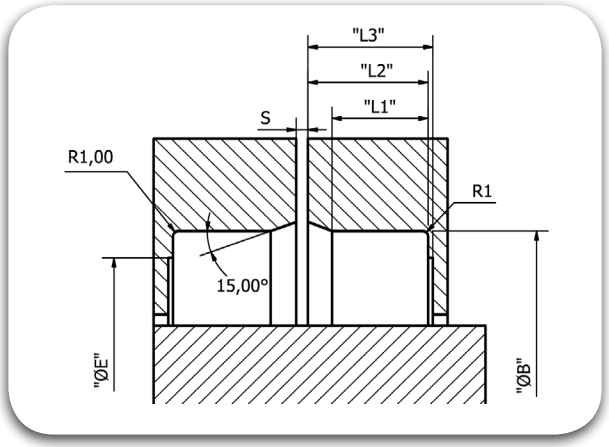

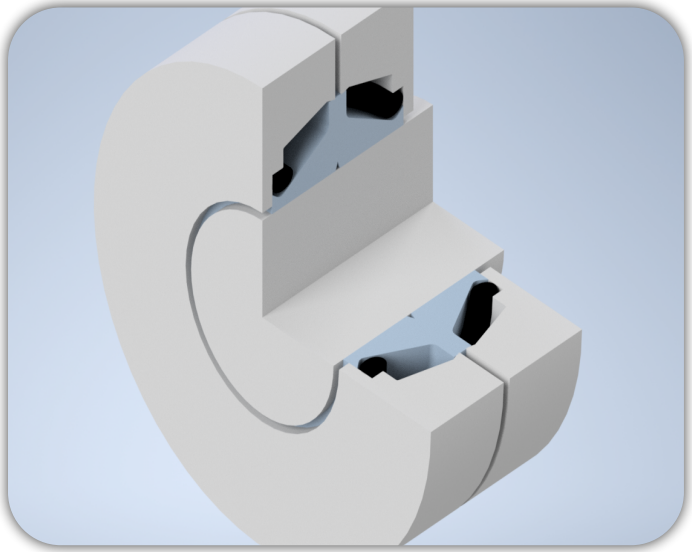

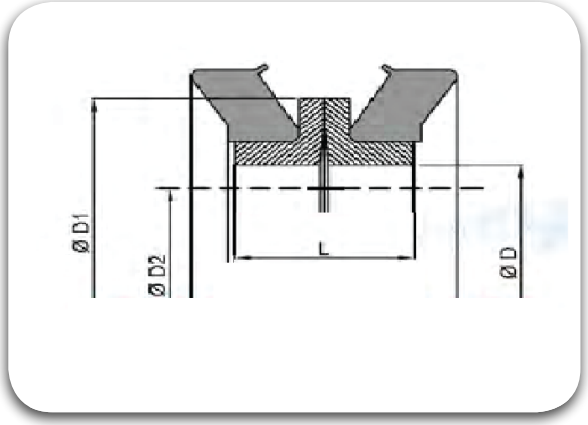

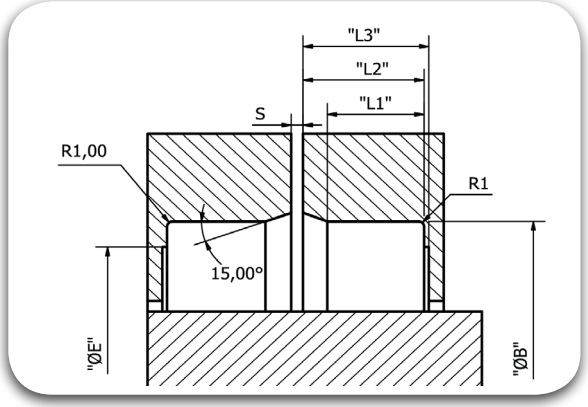

Sl. No.	TRIADA® Part Numbers	"ØA"	"ØB"	"L"	"ØC"	"ØD"	"ØE"	"L1"	"L2"	"L3"	"S"
1	SDM 0380 0650 200	38.00	65.00	20.00	42.00	59.00	53.00	8.00	10.00	10.50	3.00
2	SDM 0440 0700 200	44.00	70.00	20.00	47.00	62.00	58.00	8.00	10.00	11.00	3.00
3	SDM 0460 0762 190	46.00	76.20	19.00	50.50	65.00	63.00	8.00	10.00	11.00	2.50
4	SDM 0500 0800 220	50.00	80.00	22.00	54.00	73.00	67.00	10.00	11.50	12.00	3.00
5	SDM 0540 0825 190	54.00	82.50	19.00	58.50	73.00	65.00	8.00	10.00	11.00	3.00
6	SDM 0570 0840 196	57.00	84.00	19.60	58.60	80.00	71.00	7.50	9.00	9.50	3.00
7	SDM 0595 0878 190	59.50	87.80	19.00	63.50	81.00	71.00	8.00	9.00	9.50	3.00
8	SDM 0640 0954 200	64.00	95.40	20.00	67.00	86.20	82.00	8.00	10.00	11.00	3.00
9	SDM 0640 0950 250	64.00	95.00	25.00	67.00	87.00	81.00	11.00	12.50	13.00	4.00
10	SDM 0640 0954 200	64.00	95.40	20.00	67.00	91.70	82.00	8.00	10.00	11.00	3.00
11	SDM 0640 0956 200	64.00	95.60	20.00	68.00	86.20	82.00	8.00	10.00	11.00	3.50
12	SDM 0700 1022 200	70.00	102.20	20.00	73.80	92.80	88.00	8.00	10.00	11.00	3.00
13	SDM 0700 1022 200	70.00	102.20	20.00	74.00	99.00	88.00	8.00	10.00	11.00	3.00
14	SDM 0740 1050 250	74.00	105.00	25.00	77.00	97.00	87.00	11.00	12.50	13.50	4.00
15	SDM 0700 1102 200	70.00	110.20	20.00	81.70	101.50	96.00	8.00	10.00	11.00	3.00
16	SDM 0780 1143 220	78.00	114.30	22.00	82.50	100.00	97.00	9.00	11.00	12.00	3.50
17	SDM 0830 1130 175	83.00	113.00	17.50	87.50	109.00	100.00	7.00	8.50	9.50	3.00
18	SDM 0850 1158 190	85.00	115.80	19.00	87.50	111.50	102.00	8.50	10.00	11.00	3.00
19	SDM 0880 1258 240	88.00	125.80	24.00	92.00	113.00	109.00	10.00	12.50	13.00	3.00
20	SDM 0900 1258 240	90.00	125.80	24.00	94.00	112.50	109.00	10.00	12.50	13.00	3.00
21	SDM 0950 1240 175	95.00	124.00	17.50	99.00	120.00	110.00	7.00	8.50	9.50	3.00
22	SDM 0950 1273 190	95.00	127.30	19.00	99.00	123.00	113.00	7.00	10.00	11.00	3.00
23	SDM 1000 1350 240	100.00	135.00	24.00	104.00	126.00	114.00	10.00	12.00	13.00	4.00

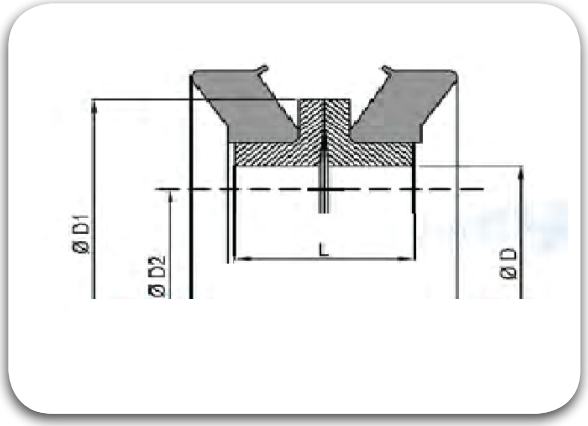

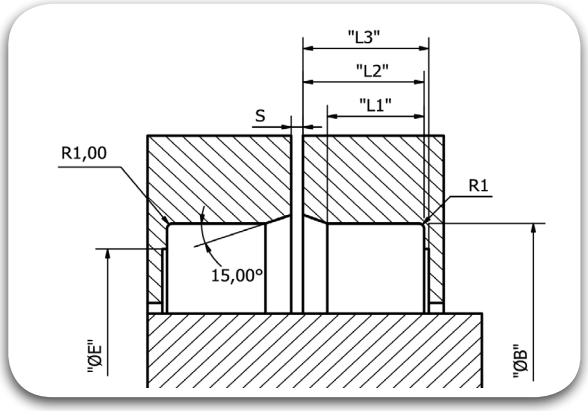

Sl. No.	TRIADA® Part Numbers	"D2"	"d1"	"L"	"D"	"D1"	"ØE"	"L1"	"L2"	"L3"	"S"
24	SDM 1010 1349 244	101.00	134.90	24.40	105.00	124.00	125.00	12.00	13.30	14.50	3.00
25	SDM 1100 1479 260	110.00	147.90	26.00	114.00	133.20	130.00	10.50	12.00	13.00	4.00
26	SDM 1100 1480 260	110.00	148.00	26.00	114.00	138.00	126.00	10.00	12.00	13.00	4.00
27	SDM 1190 1625 320	119.00	162.50	32.00	124.00	144.00	141.50	17.00	18.50	20.50	3.00
28	SDM 1280 1715 280	128.00	171.50	28.00	133.00	156.00	151.00	11.00	13.00	14.00	6.50
29	SDM 1430 1841 324	143.00	184.10	32.40	148.50	168.00	164.00	15.00	16.50	17.50	5.00
30	SDM 1450 1900 300	145.00	190.00	30.00	150.00	175.00	170.00	13.00	15.00	15.50	5.00
31	SDM 1490 1940 360	149.00	194.00	36.00	154.00	180.00	174.00	17.00	18.40	20.00	4.50
32	SDM 1530 1900 180	153.00	190.00	18.00	158.00	180.00	174.00	7.00	8.00	10.00	6.00
33	SDM 1640 2062 330	164.00	206.20	33.00	169.00	195.00	191.50	14.00	15.10	18.40	5.00
34	SDM 1730 2189 290	173.00	218.90	29.00	177.70	207.00	197.00	15.00	16.60	17.50	5.00
35	SDM 1870 2389 310	187.00	238.90	31.00	193.00	214.30	215.00	18.00	19.40	20.40	3.00
36	SDM 1880 2388 310	188.00	238.80	31.00	194.00	214.50	214.00	19.00	20.10	21.00	5.00
37	SDM 1950 2450 350	195.00	245.00	35.00	198.00	224.00	223.00	15.00	17.00	17.50	6.00
38	SDM 2210 2771 410	221.00	277.10	41.00	228.00	260.50	247.50	22.00	23.50	24.50	4.00
39	SDM 2250 2800 350	225.00	280.00	35.00	233.00	259.00	250.00	15.00	17.00	18.00	6.00
40	SDM 2350 2794 360	235.00	279.40	36.00	241.50	273.50	260.60	16.50	17.50	20.00	2.00
41	SDM 2700 3094 360	270.00	309.40	36.00	275.00	303.00	290.00	16.50	17.50	20.00	2.00
42	SDM 2780 3294 420	278.00	329.40	42.00	283.00	305.00	307.00	17.00	18.50	22.10	3.00
43	SDM 3120 3651 400	312.00	365.10	40.00	320.00	352.50	343.00	18.50	20.00	21.50	2.00
44	SDM 3450 4017 396	345.00	401.70	39.60	355.00	392.00	380.00	21.50	23.00	24.00	1.80
45	SDM 4350 4887 410	435.00	488.70	41.00	442.00	470.00	467.00	17.00	18.40	22.00	2.50
46	SDM 4800 5461 430	480.00	546.10	43.00	492.00	530.00	532.00	18.40	19.90	24.40	2.00

Rotary Seals

SAV

TRIADA
TECHNOLOGIES

#SealingExcellence


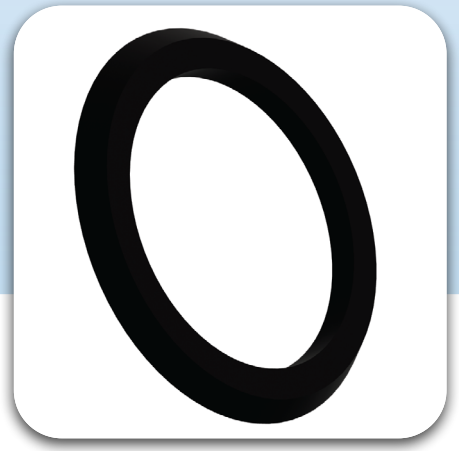

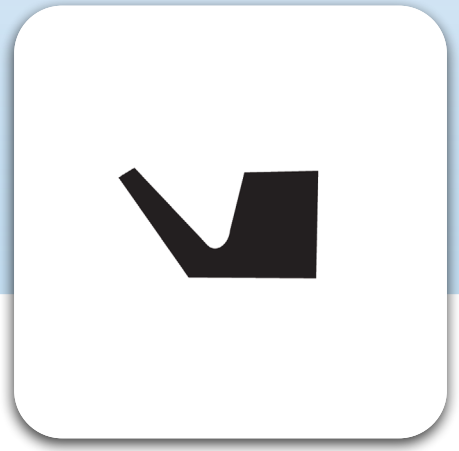

Description

The V-Ring is an all elastomer axial seal for rotary shafts and bearings. It rotates with the shaft and seals axially against a stationary counter face perpendicular to the shaft. This type of seal has been used widely for several applications and has proved to be reliable and effective against dust, dirt, water and oil splash and other media.
The ring consists of three parts:
a) The seal body, installed with interference to the shaft.
b) The hinge, acting as a spring connection between the body and the lip.
c) The conical and flexible sealing lip which provides the actual dynamic sealing against the counter face. The counter face can be the side wall of the bearing, a washer or any housing.

Diameter Range	Ø2.70 – Ø2020.00 (Larger dia. on request)
Standard material	TRIAFLEX® NBR 60 Shores (Other Compounds available, so as to suit the Application Conditions).
Temperature(°C)	-40ºC to 200ºC (Based on Elastomer Material).
Speed	Upto 15 m/s depending on the type of elastomer with the standard TRIAFLEX® T576 (NBR 75 Shores) it can go upto 10 m/s. When used with elastomer in TRIAFLEX® T676 (FKM 75 Shores) it can go upto 15 m/s.
Fluids	Oil & Grease.

Material Details

Seal Material	Seal Material Code
TRIAFLEX® NBR 60	T561
TRIAFLEX® HNBR 60	T531
TRIAFLEX® FKM 60	T661
TRIAFLEX® EPDM 60	T761

Nomenclature

Part No	SAV	1050	1150	128	T561
	Seal profile	Shaft Dia. Min.	Shaft Dia. Max.	Seal Width x 10	Seal Material Code

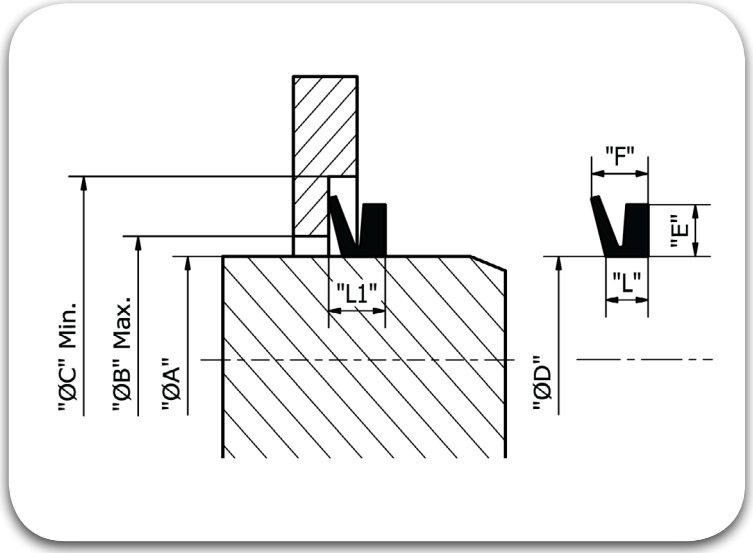

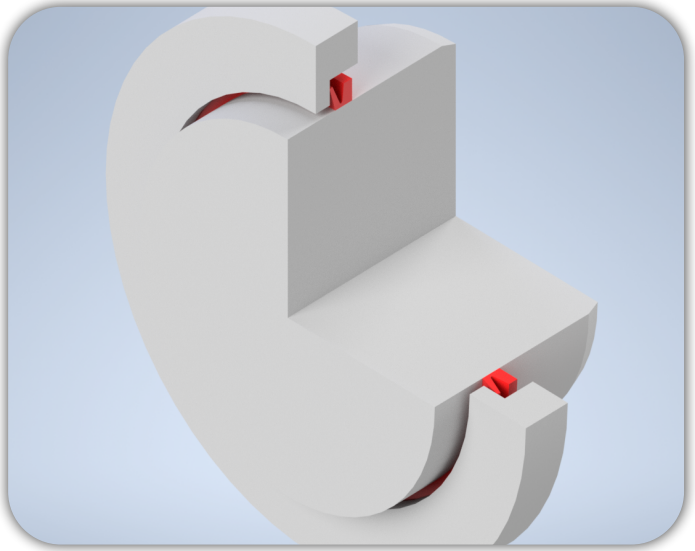

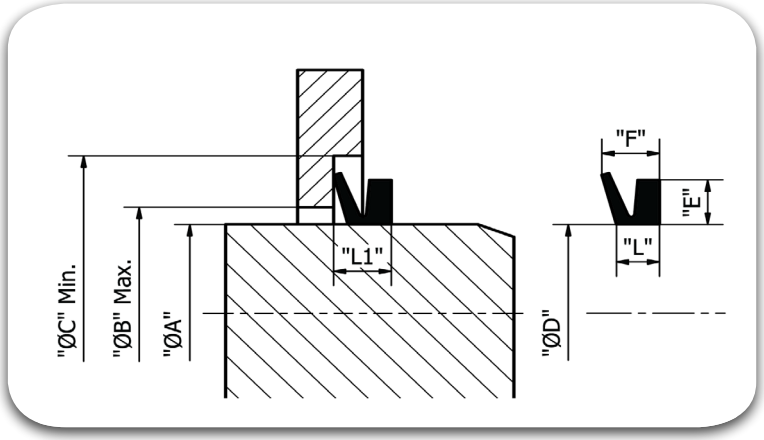

Sl. No.	TRIADA® Part Numbers	Shaft dia. "ØA"	Inside dia. "ØD"	height of cross section "E"	dim. "L"	Free width "F"	Max "ØB"	Min. "ØC"	Fitted width "L1"
1	SAV 0027 0035 030	2.7-3.5	2.50	1.50	2.10	3.00	ØA+1	ØA+4	2.5±0.3
2	SAV 0035 0045 037	3.5-4.5	3.20	2.00	2.40	3.70	ØA+1	ØA+6	3.0±0.4
3	SAV 0045 0055 037	4.5-5.5	4.00	2.00	2.40	3.70	ØA+1	ØA+6	3.0±0.4
4	SAV 0055 0065037	5.5-6.5	5.00	2.00	2.40	3.70	ØA+1	ØA+6	3.0±0.4
5	SAV 0065 0080 037	6.5-8.0	6.00	2.00	2.40	3.70	ØA+1	ØA+6	3.0±0.4
6	SAV 0080 0095 037	8.0-9.5	7.00	2.00	2.40	3.70	ØA+1	ØA+6	3.0±0.4
7	SAV 0095 0115 055	9.5-11.5	9.00	3.00	3.40	5.50	ØA+1	ØA+9	4.5±0.6
8	SAV 0115 0125 055	11.5-12.5	10.50	3.00	3.40	5.50	ØA+1	ØA+9	4.5±0.6
9	SAV 0125 0135 055	12.5-13.5	11.70	3.00	3.40	5.50	ØA+1	ØA+9	4.5±0.6
10	SAV 0135 0155 055	13.5-15.5	12.50	3.00	3.40	5.50	ØA+1	ØA+9	4.5±0.6
11	SAV 0155 0170 055	15.5-17.0	14.00	3.00	3.40	5.50	ØA+1	ØA+9	4.5±0.6
12	SAV 0175 0190 055	17.5-19.0	16.00	3.00	3.40	5.50	ØA+1	ØA+9	4.5±0.6
13	SAV 0190 0210 075	19.0-21.0	18.00	4.00	4.70	7.50	ØA+2	ØA+12	6.0±0.8
14	SAV 0210 0240 075	21.0-24.0	20.00	4.00	4.70	7.50	ØA+2	ØA+12	6.0±0.8
15	SAV 0240 0270 075	24.0-27.0	22.00	4.00	4.70	7.50	ØA+2	ØA+12	6.0±0.8
16	SAV 0270 0290 075	27.0-29.0	25.00	4.00	4.70	7.50	ØA+2	ØA+12	6.0±0.8
17	SAV 0290 0310 075	29.0-31.0	27.00	4.00	4.70	7.50	ØA+2	ØA+12	6.0±0.8
18	SAV 0310 0330 075	31.0-33.0	29.00	4.00	4.70	7.50	ØA+2	ØA+12	6.0±0.8
19	SAV 0330 0360 075	33.0-36.0	31.00	4.00	4.70	7.50	ØA+2	ØA+12	6.0±0.8
20	SAV 0360 0380 075	36.0-38.0	34.00	4.00	4.70	7.50	ØA+2	ØA+12	6.0±0.8

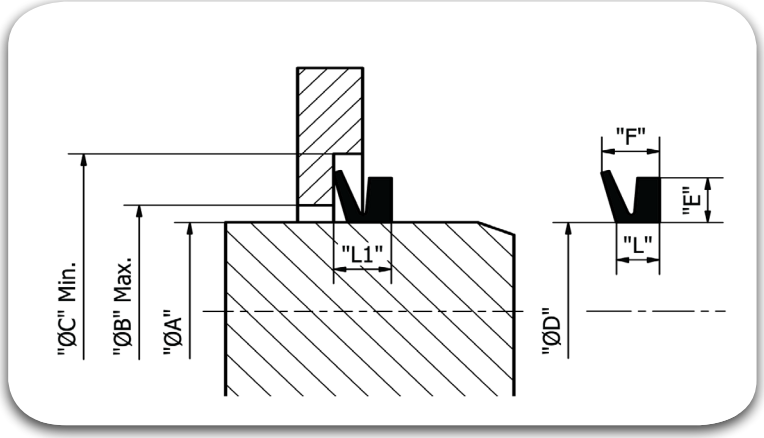

Sl. No.	TRIADA® Part Numbers	Shaft dia. "ØA"	Inside dia. "ØD"	height of cross section "E"	dim. "L"	Free width "F"	Max "ØB"	Min. "ØC"	Fitted width "L1"
21	SAV 0380 0430 090	38.0-43.0	36.00	5.00	5.50	9.00	ØA+2	ØA+15	7.0±1.0
22	SAV 0430 0480 090	43.0-48.0	40.00	5.00	5.50	9.00	ØA+2	ØA+15	7.0±1.0
23	SAV 0480 0530 090	48.0-53.0	45.00	5.00	5.50	9.00	ØA+2	ØA+15	7.0±1.0
24	SAV 0530 0580 090	53.0-58.0	49.00	5.00	5.50	9.00	ØA+2	ØA+15	7.0±1.0
25	SAV 0580 0630 090	58.0-63.0	54.00	5.00	5.50	9.00	ØA+2	ØA+15	7.0±1.0
26	SAV 0630 0850 090	63.0-68.0	58.00	5.00	5.50	9.00	ØA+2	ØA+15	7.0±1.0
27	SAV 0850 0730 110	68.0-73.0	63.00	6.00	6.80	11.00	ØA+3	ØA+18	9.0±1.2
28	SAV 0730 0780 110	73.0-78.0	67.00	6.00	6.80	11.00	ØA+3	ØA+18	9.0±1.2
29	SAV 0780 0830 110	78.0-83.0	72.00	6.00	6.80	11.00	ØA+3	ØA+18	9.0±1.2
30	SAV 0830 0880 110	83.0-88.0	76.00	6.00	6.80	11.00	ØA+3	ØA+18	9.0±1.2
31	SAV 0880 0930 110	88.0-93.0	81.00	6.00	6.80	11.00	ØA+3	ØA+18	9.0±1.2
32	SAV 0930 0980 110	93.0-98.0	85.00	6.00	6.80	11.00	ØA+3	ØA+18	9.0±1.2
33	SAV 0980 1050 110	98.0-105.0	90.00	6.00	6.80	11.00	ØA+3	ØA+18	9.0±1.2
34	SAV 1050 1150 128	105.0-115.0	99.00	7.00	7.90	12.80	ØA+4	ØA+21	10.50±1.5
35	SAV 1150 1250 128	115.0-125.0	108.00	7.00	7.90	12.80	ØA+4	ØA+21	10.50±1.5
36	SAV 1250 1350 128	125.0-135.0	117.00	7.00	7.90	12.80	ØA+4	ØA+21	10.50±1.5
37	SAV 1350 1450 128	135.0-145.0	126.00	7.00	7.90	12.80	ØA+4	ØA+21	10.50±1.5
38	SAV 1450 1550 128	145.0-155.0	135.00	7.00	7.90	12.80	ØA+4	ØA+21	10.50±1.5
39	SAV 1550 1650 145	155.0-165.0	144.00	8.00	9.00	14.50	ØA+4	ØA+24	12.0±1.8
40	SAV 1650 1750 145	165.0-175.0	153.00	8.00	9.00	14.50	ØA+4	ØA+24	12.0±1.8

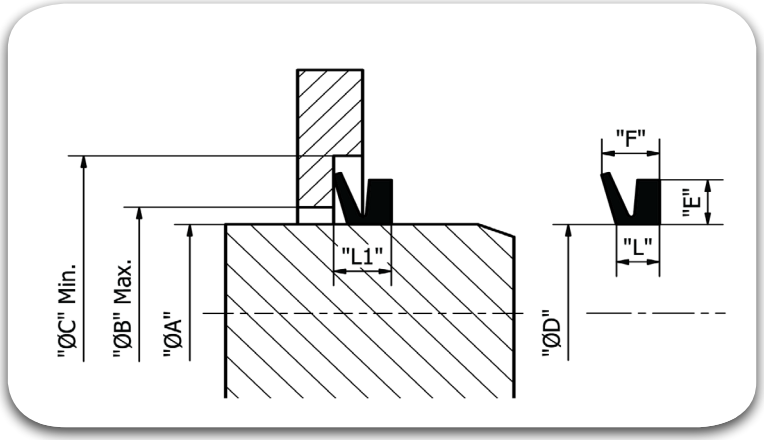

Sl. No.	TRIADA® Part Numbers	Shaft dia. "ØA"	Inside dia. "ØD"	height of cross section "E"	dim. "L"	Free width "F"	Max "ØB"	Min. "ØC"	Fitted width "L1"
41	SAV 1750 1850 154	175.0-185.0	162.00	8.00	9.00	14.50	ØA+4	ØA+24	12.0±1.8
42	SAV 1850 1950 145	185.0-195.0	171.00	8.00	9.00	14.50	ØA+4	ØA+24	12.0±1.8
43	SAV 1950 2100 145	195.0-210.0	180.00	8.00	9.00	14.50	ØA+4	ØA+24	12.0±1.8
44	SAV 1900 2100 250	190.0-210.0	180.00	8.00	14.30	25.00	ØA+10	ØA+24	20.0±4.0
45	SAV 2100 2350 250	210.0-235.0	198.00	15.00	14.30	25.00	ØA+10	ØA+45	20.0±4.0
46	SAV 2350 2650 250	235.0-265.0	225.00	15.00	14.30	25.00	ØA+10	ØA+45	20.0±4.0
47	SAV 2650 2900 250	265.0-290.0	247.00	15.00	14.30	25.00	ØA+10	ØA+45	20.0±4.0
48	SAV 2900 3100 250	290.0-310.0	270.00	15.00	14.30	25.00	ØA+10	ØA+45	20.0±4.0
49	SAV 3100 3350 250	310.0-335.0	292.00	15.00	14.30	25.00	ØA+10	ØA+45	20.0±4.0
50	SAV 3350 3650 250	335.0-365.0	315.00	15.00	14.30	25.00	ØA+10	ØA+45	20.0±4.0
51	SAV 3650 3900 250	365.0-390.0	337.00	15.00	14.30	25.00	ØA+10	ØA+45	20.0±4.0
52	SAV 3900 4300 250	390.0-430.0	360.00	15.00	14.30	25.00	ØA+10	ØA+45	20.0±4.0
53	SAV 4300 4800 250	430.0-480.0	405.00	15.00	14.30	25.00	ØA+10	ØA+45	20.0±4.0
54	SAV 4800 5300 250	480.0-530.0	450.00	15.00	14.30	25.00	ØA+10	ØA+45	20.0±4.0
55	SAV 5300 5800 250	530.0-580.0	495.00	15.00	14.30	25.00	ØA+10	ØA+45	20.0±4.0
56	SAV 5800 6300 250	580.0-630.0	540.00	15.00	14.30	25.00	ØA+10	ØA+45	20.0±4.0
57	SAV 6300 6650 250	630.0-665.0	600.00	15.00	14.30	25.00	ØA+10	ØA+45	20.0±4.0
58	SAV 6650 7050 250	665.0-705.0	630.00	15.00	14.30	25.00	ØA+10	ØA+45	20.0±4.0
59	SAV 7050 7450 250	705.0-745.0	670.00	15.00	14.30	25.00	ØA+10	ØA+45	20.0±4.0
60	SAV 7450 7850 250	745.0-785.0	705.00	15.00	14.30	25.00	ØA+10	ØA+45	20.0±4.0

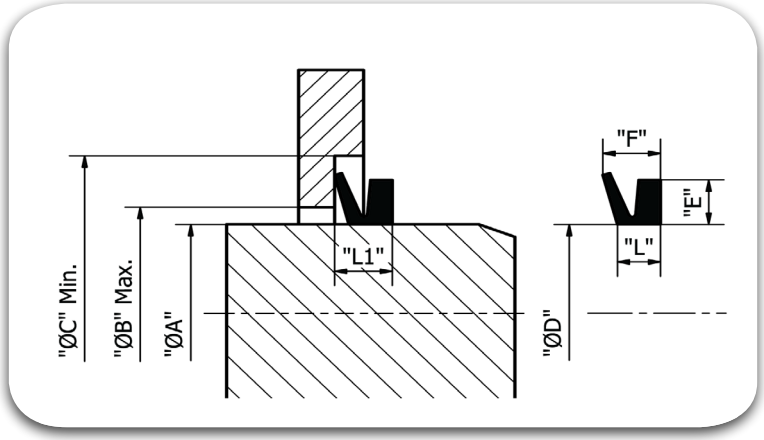

Sl. No.	TRIADA® Part Numbers	Shaft dia. "ØA"	Inside dia. "ØD"	height of cross section "E"	dim. "L"	Free width "F"	Max "ØB"	Min. "ØC"	Fitted width "L1"
61	SAV 7850 8300 250	785.0-830.0	745.00	15.00	14.30	25.00	ØA+10	ØA+45	20.0±4.0
62	SAV 8300 8750 250	830.0-875.0	785.00	15.00	14.30	25.00	ØA+10	ØA+45	20.0±4.0
63	SAV 8750 9200 250	875.0-920.0	825.00	15.00	14.30	25.00	ØA+10	ØA+45	20.0±4.0
64	SAV 9200 9650 250	920.0-965.0	865.00	15.00	14.30	25.00	ØA+10	ØA+45	20.0±4.0
65	SAVX 9650 1015 250	965.0-1015.0	910.00	15.00	14.30	25.00	ØA+10	ØA+45	20.0±4.0
66	SAVX 1015 1065 250	1015.0-1065.0	955.00	15.00	14.30	25.00	ØA+10	ØA+45	20.0±4.0
67	SAVX 1065 1115 250	1065.0-1115.0	1000.00	15.00	14.30	25.00	ØA+10	ØA+45	20.0±4.0
68	SAVX 1115 1165 250	1115.0-1165.0	1045.00	15.00	14.30	25.00	ØA+10	ØA+45	20.0±4.0
69	SAVX 1165 1215 250	1165.0-1215.0	1090.00	15.00	14.30	25.00	ØA+10	ØA+45	20.0±4.0
70	SAVX 1215 1270 250	1215.0-1270.0	1135.00	15.00	14.30	25.00	ØA+10	ØA+45	20.0±4.0
71	SAVX 1270 1320 250	1270.0-1320.0	1180.00	15.00	14.30	25.00	ØA+10	ØA+45	20.0±4.0
72	SAVX 1320 1370 250	1320.0-1370.0	1225.00	15.00	14.30	25.00	ØA+10	ØA+45	20.0±4.0
73	SAVX 1370 1420 250	1370.0-1420.0	1270.00	15.00	14.30	25.00	ØA+10	ØA+45	20.0±4.0
74	SAVX 1420 1470 250	1420.0-1470.0	1315.00	15.00	14.30	25.00	ØA+10	ØA+45	20.0±4.0
75	SAVX 1470 1520 250	1470.0-1520.0	1360.00	15.00	14.30	25.00	ØA+10	ØA+45	20.0±4.0
76	SAVX 1520 1570 250	1520.0-1570.0	1405.00	15.00	14.30	25.00	ØA+10	ØA+45	20.0±4.0
77	SAVX 1570 1620 250	1570.0-1620.0	1450.00	15.00	14.30	25.00	ØA+10	ØA+45	20.0±4.0
78	SAVX 1620 1670 250	1620.0-1670.0	1495.00	15.00	14.30	25.00	ØA+10	ØA+45	20.0±4.0
79	SAVX 1670 1720 250	1670.0-1720.0	1540.00	15.00	14.30	25.00	ØA+10	ØA+45	20.0±4.0
80	SAVX 1720 1770 250	1720.0-1770.0	1585.00	15.00	14.30	25.00	ØA+10	ØA+45	20.0±4.0

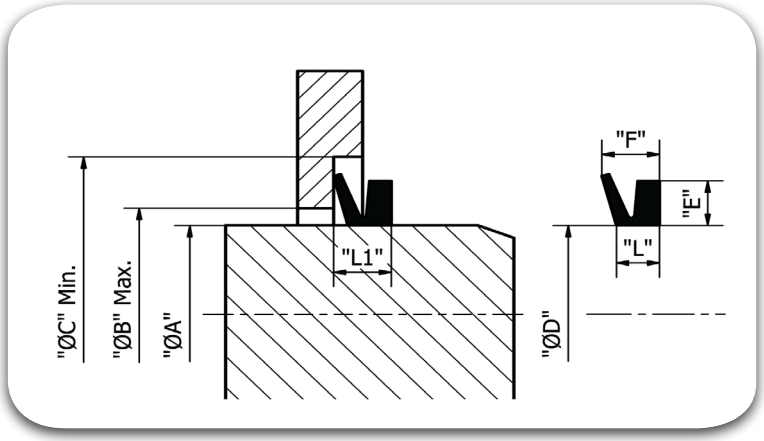

Sl. No.	TRIADA® Part Numbers	Shaft dia. "ØA"	Inside dia. "ØD"	height of cross section "E"	dim. "L"	Free width "F"	Max "ØB"	Min. "ØC"	Fitted width "L1"
81	SAVX 1770 1820 250	1770.0-1820.0	1,630.00	15.00	14.30	25.00	ØA+10	ØA+45	20.0±4.0
82	SAVX 1820 1870 250	1820.0-1870.0	1,675.00	15.00	14.30	25.00	ØA+10	ØA+45	20.0±4.0
83	SAVX 1870 1920 250	1870.0-1920.0	1,720.00	15.00	14.30	25.00	ØA+10	ØA+45	20.0±4.0
84	SAVX 1920 1970 250	1920.0-1970.0	1,765.00	15.00	14.30	25.00	ØA+10	ØA+45	20.0±4.0
85	SAVX 1970 2020 250	1970.0-2020.0	1,810.00	15.00	14.30	25.00	ØA+10	ØA+45	20.0±4.0

Rotary Seals

SV1

TRIADA
TECHNOLOGIES

#SealingExcellence

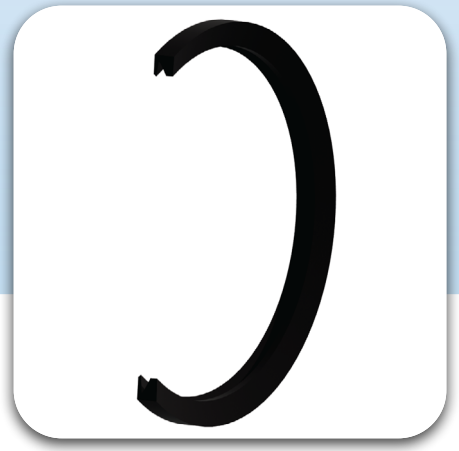
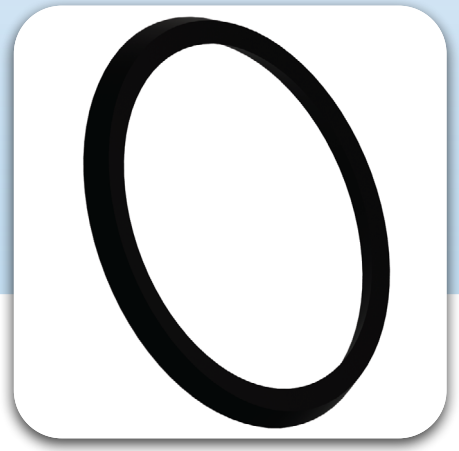



Description

The V-Ring is an all elastomer axial seal for rotary shafts and bearings. It rotates with the shaft and seals axially against a stationary counter face perpendicular to the shaft. This type of seal has been used widely for several applications and has proved to be reliable and effective against dust, dirt, water and oil splash and other media.
The ring consists of three parts:
a) The seal body, installed with interference to the shaft.
b) The hinge, acting as a spring connection between the body and the lip.
c) The conical and flexible sealing lip which provides the actual dynamic sealing against the counter face. The counter face can be the side wall of the bearing, a washer or any housing.

Diameter Range	Ø4.50 – Ø210.00 (Larger dia. on request)
Standard material	TRIAFLEX® NBR 60 Shores (Other Compounds available, so as to suit the Application Conditions).
Temperature(°C)	-40ºC to 200ºC (Based on Elastomer Material).
Speed	Upto 15 m/s depending on the type of elastomer with the standard TRIAFLEX® T576 (NBR 75 Shores) it Can go upto 10 m/s. When used with elastomer in TRIAFLEX® T676 (FKM 75 Shores) it can go upto 15 m/s.
Fluids	Oil & Grease.

Material Details

Seal Material	Seal Material Code
TRIAFLEX® NBR 60	T561
TRIAFLEX® HNBR 60	T531
TRIAFLEX® FKM 60	T661
TRIAFLEX® EPDM 60	T761

Nomenclature

Part No	SV1	1050	1150	180	T761
	Seal profile	Shaft Dia. Min.	Shaft Dia. Max.	Seal Width x10	Seal Material Code

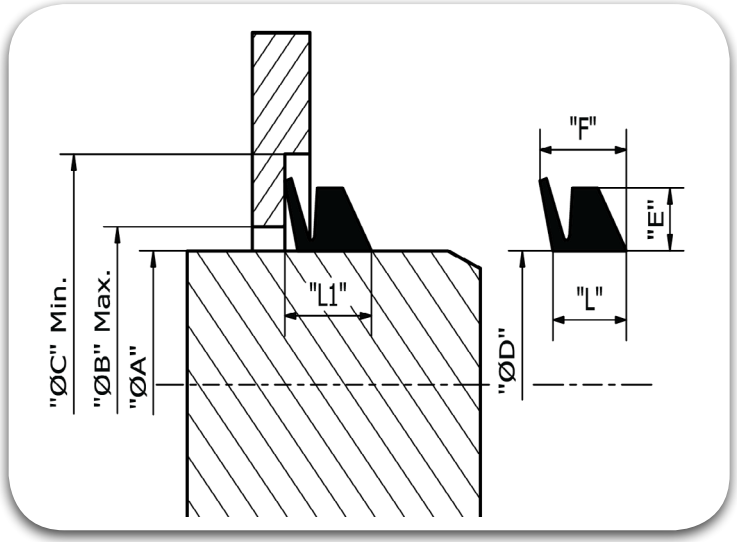

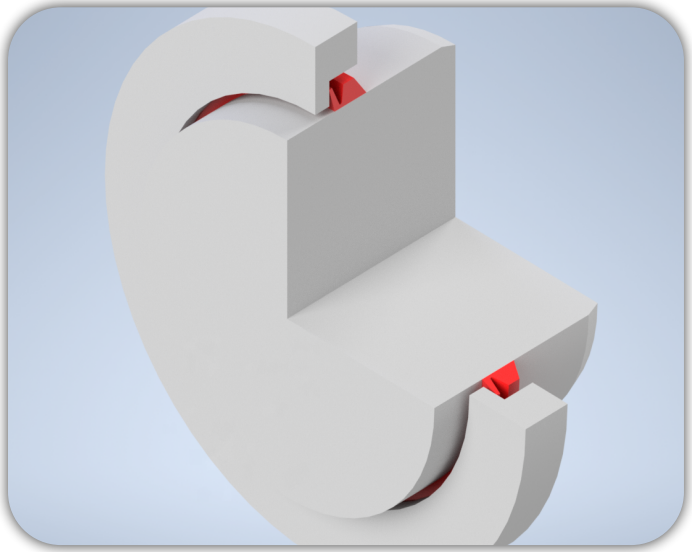

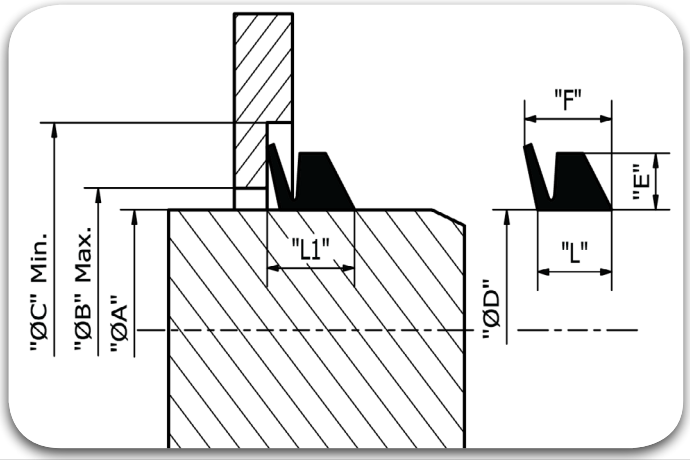

Sl. No.	TRIADA® Part Numbers	Shaft dia. "ØA"	Inside dia. "ØD"	height of cross section " E"	dim. "L"	Free width "F"	Max "ØB"	Min. "ØC"	Fitted width "L1"
1	SV1 0045 0055 052	4.5-5.5	4.00	2.00	3.90	5.20	ØA+1	ØA+6	2.5±0.3
2	SV1 0055 0065 052	5.5-6.5	5.00	2.00	3.90	5.20	ØA+1	ØA+6	3.0±0.4
3	SV1 0065 0080 052	6.5-8.0	6.00	2.00	3.90	5.20	ØA+1	ØA+6	3.0±0.4
4	SV1 0080 0095 052	8.0-9.5	7.00	2.00	3.90	5.20	ØA+1	ØA+6	3.0±0.4
5	SV1 0095 0115 077	9.5-11.5	9.00	3.00	5.60	7.70	ØA+1	ØA+9	3.0±0.4
6	SV1 0115 0135 077	11.5-13.5	10.50	3.00	5.60	7.70	ØA+1	ØA+9	3.0±0.4
7	SV1 0135 0155 077	13.5-15.5	12.50	3.00	5.60	7.70	ØA+1	ØA+9	4.5±0.6
8	SV1 0155 0175 077	15.5-17.5	14.00	3.00	5.60	7.70	ØA+1	ØA+9	4.5±0.6
9	SV1 0175 0190 077	17.5-19.0	16.00	3.00	5.60	7.70	ØA+1	ØA+9	4.5±0.6
10	SV1 0190 0210 105	19.0-21.0	18.00	4.00	7.90	10.50	ØA+2	ØA+12	4.5±0.6
11	SV1 0210 0240 105	21.0-24.0	20.00	4.00	7.90	10.50	ØA+2	ØA+12	4.5±0.6
12	SV1 0240 0270 105	24.0-27.0	22.00	4.00	7.90	10.50	ØA+2	ØA+12	4.5±0.6
13	SV1 0270 0290 105	27.0-29.0	25.00	4.00	7.90	10.50	ØA+2	ØA+12	6.0±0.8
14	SV1 0290 0310 105	29.0-31.0	27.00	4.00	7.90	10.50	ØA+2	ØA+12	6.0±0.8
15	SV1 0310 0330 105	31.0-33.0	29.00	4.00	7.90	10.50	ØA+2	ØA+12	6.0±0.8
16	SV1 0330 0360 105	33.0-36.0	31.00	4.00	7.90	10.50	ØA+2	ØA+12	6.0±0.8
17	SV1 0360 0380 105	36.0-38.0	34.00	4.00	7.90	10.50	ØA+2	ØA+12	6.0±0.8
18	SV1 0380 0430 130	38.0-43.0	36.00	5.00	9.50	13.00	ØA+2	ØA+15	6.0±0.8
19	SV1 0430 0480 130	43.0-48.0	40.00	5.00	9.50	13.00	ØA+2	ØA+15	6.0±0.8
20	SV1 0480 0530 130	48.0-53.0	45.00	5.00	9.50	13.00	ØA+2	ØA+15	6.0±0.8

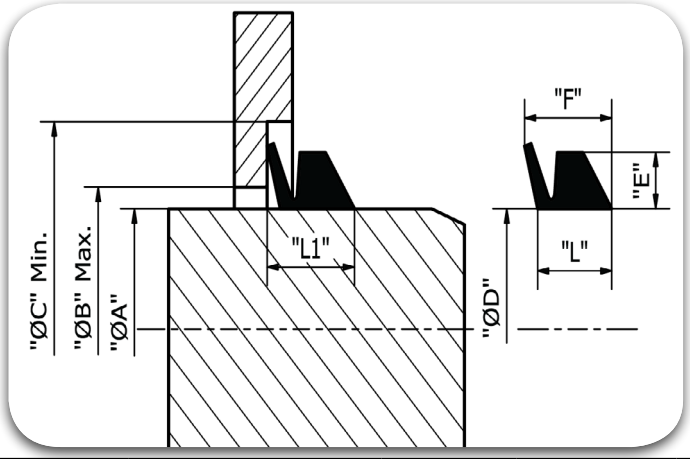

Sl. No.	TRIADA® Part Numbers	Shaft dia. "ØA"	Inside dia. "ØD"	height of cross section " E"	dim. "L"	Free width "F"	Max "ØB"	Min. "ØC"	Fitted width "L1"
21	SV1 0530 0580 130	53.0-58.0	49.00	5.00	9.50	13.00	ØA+2	ØA+15	7.0±1.0
22	SV1 0580 0630 130	58.0-63.0	54.00	5.00	9.50	13.00	ØA+2	ØA+15	7.0±1.0
23	SV1 0630 0850 130	63.0-68.0	58.00	5.00	9.50	13.00	ØA+2	ØA+15	7.0±1.0
24	SV1 0850 0730 155	68.0-73.0	63.00	6.00	11.30	15.50	ØA+2	ØA+18	7.0±1.0
25	SV1 0730 0780 155	73.0-78.0	67.00	6.00	11.30	15.50	ØA+2	ØA+18	7.0±1.0
26	SV1 0780 0830 155	78.0-83.0	72.00	6.00	11.30	15.50	ØA+2	ØA+18	7.0±1.0
27	SV1 0830 0880 155	83.0-88.0	76.00	6.00	11.30	15.50	ØA+3	ØA+18	9.0±1.2
28	SV1 0880 0930 155	88.0-93.0	81.00	6.00	11.30	15.50	ØA+3	ØA+18	9.0±1.2
29	SV1 0930 0980 155	93.0-98.0	85.00	6.00	11.30	15.50	ØA+3	ØA+18	9.0±1.2
30	SV1 0980 1050 155	98.0-105.0	90.00	6.00	11.30	15.50	ØA+3	ØA+18	9.0±1.2
31	SV1 1050 1150 180	105.0-115.0	99.00	7.00	13.10	18.00	ØA+4	ØA+21	9.0±1.2
32	SV1 1150 1250 180	115.0-125.0	108.00	7.00	13.10	18.00	ØA+4	ØA+21	9.0±1.2
33	SV1 1250 1350 180	125.0-135.0	117.00	7.00	13.10	18.00	ØA+4	ØA+21	9.0±1.2
34	SV1 1350 1450 180	135.0-145.0	126.00	7.00	13.10	18.00	ØA+4	ØA+21	10.50±1.5
35	SV1 1450 1550 180	145.0-155.0	135.00	7.00	13.10	18.00	ØA+4	ØA+21	10.50±1.5
36	SV1 1550 1650 205	155.0-165.0	144.00	8.00	15.00	20.50	ØA+4	ØA+24	10.50±1.5
37	SV1 1650 1750 205	165.0-175.0	153.00	8.00	15.00	20.50	ØA+4	ØA+24	10.50±1.5
38	SV1 1750 1850 205	175.0-185.0	162.00	8.00	15.00	20.50	ØA+4	ØA+24	10.50±1.5
39	SV1 1850 1950 205	185.0-195.0	171.00	8.00	15.00	20.50	ØA+4	ØA+24	12.0±1.8
40	SV1 1950 2100 205	195.0-210.0	180.00	8.00	15.00	20.50	ØA+4	ØA+24	12.0±1.8

Rotary Seals

SV2

TRIADA
TECHNOLOGIES

#SealingExcellence






Description

The V-Ring is an all elastomer axial seal for rotary shafts and bearings. It rotates with the shaft and seals axially against a stationary counter face perpendicular to the shaft. This type of seal has been used widely for several applications and has proved to be reliable and effective against dust, dirt, water and oil splash and other media.
The ring consists of three parts:
a) The seal body, installed with interference to the shaft.
b) The hinge, acting as a spring connection between the body and the lip.
c) The conical and flexible sealing lip which provides the actual dynamic sealing against the counter face. The counter face can be the side wall of the bearing, a washer or any housing.

Diameter Range	Ø105.00 – Ø2025.00 (Larger dia. on request)
Standard material	TRIAFLEX® NBR 60 Shores (Other Compounds available, so as to suit the Application Conditions).
Temperature(°C)	-40ºC to 200ºC (Based on Elastomer Material).
Speed	Upto 15 m/s depending on the type of elastomer with the standard TRIAFLEX® T576 (NBR 75 Shores) it Can go upto 10 m/s. When used with elastomer in TRIAFLEX® T676 (FKM 75 Shores) it can go upto 15 m/s.
Fluids	Oil & Grease.

Material Details

Seal Material	Seal Material Code
TRIAFLEX® NBR 60	T561
TRIAFLEX® HNBR 60	T531
TRIAFLEX® FKM 60	T661
TRIAFLEX® EPDM 60	T761

Nomenclature

Part No	SV2	1035	1075	105	T561
	Seal profile	Shaft Dia. Min.	Shaft Dia. Max.	Seal Width x 10	Seal Material Code

TYPE	E	"ØB" Max	"ØC" Min.
SV2	6.00	ØA + 5	ØA + 20

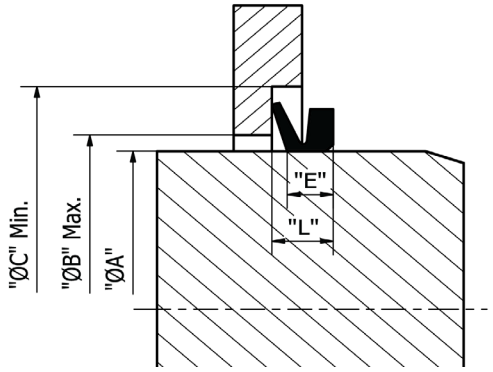

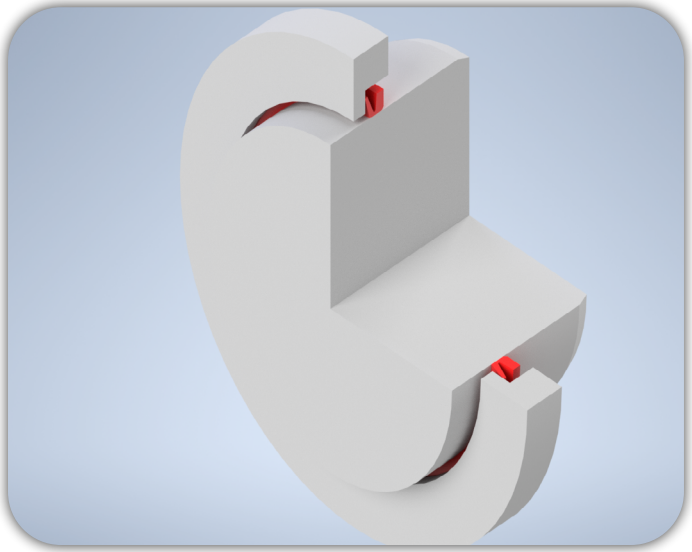

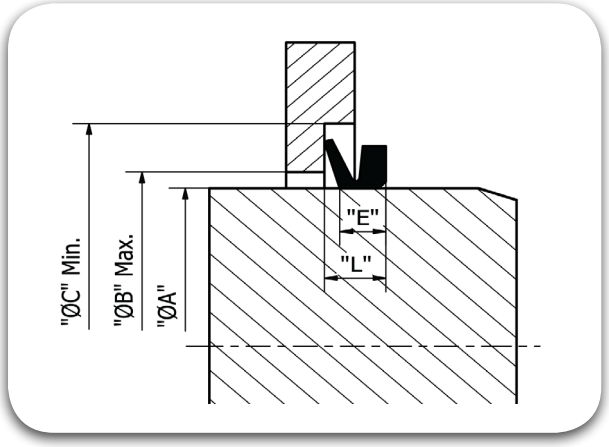

105.00

Part No	SV2 1050 1150 085
Shaft Dia.	"ØA" Min. 105.00 / "ØA" Max. 115.00
Seal Width	L 10.50
Seal I.D.	99.00

115.00

Part No	SV2 1150 1250 085
Shaft Dia.	"ØA" Min. 115.00 / "ØA" Max. 125.00
Seal Width	L 10.50
Seal I.D.	108.00

125.00

Part No	SV2 1250 1350 085
Shaft Dia.	"ØA" Min. 125.00 / "ØA" Max. 135.00
Seal Width	L 10.50
Seal I.D.	117.00

135.00

Part No	SV2 1350 1450 085
Shaft Dia.	"ØA" Min. 135.00 / "ØA" Max. 145.00
Seal Width	L 10.50
Seal I.D.	126.00

145.00

Part No	SV2 1450 1550 085
Shaft Dia.	"ØA" Min. 145.00 / "ØA" Max. 155.00
Seal Width	L 10.50
Seal I.D.	135.00

155.00

Part No	SV2 1550 1650 085
Shaft Dia.	"ØA" Min. 155.00 / "ØA" Max. 165.00
Seal Width	L 10.50
Seal I.D.	144.00

165.00

Part No	SV2 1650 1750 085
Shaft Dia.	"ØA" Min. 165.00 / "ØA" Max. 175.00
Seal Width	L 10.50
Seal I.D.	153.00

175.00

Part No	SV2 1750 1850 085
Shaft Dia.	"ØA" Min. 175.00 / "ØA" Max. 185.00
Seal Width	L 10.50
Seal I.D.	162.00

185.00

Part No	SV2 1850 1950 085
Shaft Dia.	"ØA" Min. 185.00 / "ØA" Max. 195.00
Seal Width	L 10.50
Seal I.D.	171.00

195.00

Part No	SV2 1950 2100 085
Shaft Dia.	"ØA" Min. 195.00 / "ØA" Max. 210.00
Seal Width	L 10.50
Seal I.D.	182.00

210.00

Part No	SV2 2100 2330 085
Shaft Dia.	"ØA" Min. 210.00 / "ØA" Max. 233.00
Seal Width	L 10.50
Seal I.D.	198.00

233.00

Part No	SV2 2330 2600 085
Shaft Dia.	"ØA" Min. 233.00 / "ØA" Max. 260.00
Seal Width	L 10.50
Seal I.D.	225.00

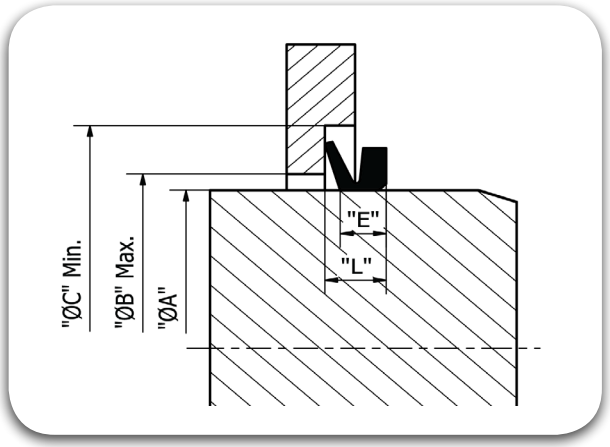

260.00

Part No	SV2 2600 2850 085
Shaft Dia.	"ØA" Min. 260.00 / "ØA" Max. 285.00
Seal Width	L 10.50
Seal I.D.	247.00

285.00

Part No	SV2 2850 3100 085
Shaft Dia.	"ØA" Min. 285.00 / "ØA" Max. 310.00
Seal Width	L 10.50
Seal I.D.	270.00

310.00

Part No	SV2 3100 3350 085
Shaft Dia.	"ØA" Min. 310.00 / "ØA" Max. 335.00
Seal Width	L 10.50
Seal I.D.	292.00

335.00

Part No	SV2 3350 3650 085
Shaft Dia.	"ØA" Min. 335.00 / "ØA" Max. 365.00
Seal Width	L 10.50
Seal I.D.	315.00

365.00

Part No	SV2 3650 3850 085
Shaft Dia.	"ØA" Min. 365.00 / "ØA" Max. 385.00
Seal Width	L 10.50
Seal I.D.	337.00

385.00

Part No	SV2 3850 4100 085
Shaft Dia.	"ØA" Min. 385.00 / "ØA" Max. 410.00
Seal Width	L 10.50
Seal I.D.	360.00

410.00

Part No	SV2 4100 4400 085
Shaft Dia.	"ØA" Min. 410.00 / "ØA" Max. 440.00
Seal Width	L 10.50
Seal I.D.	382.00

440.00

Part No	SV2 4400 4750 085
Shaft Dia.	"ØA" Min. 440.00 / "ØA" Max. 475.00
Seal Width	L 10.50
Seal I.D.	405.00

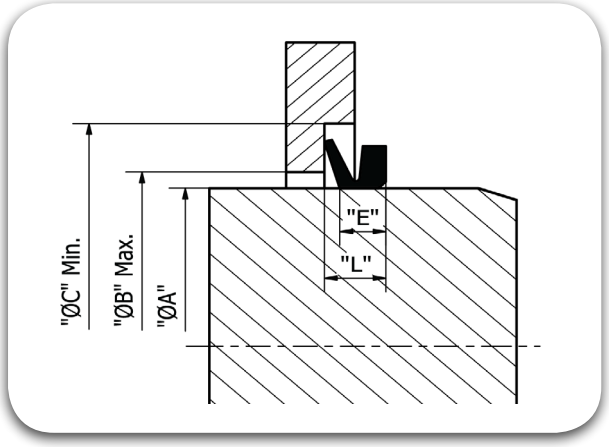

475.00

Part No	SV2 4750 5100 085
Shaft Dia.	"ØA" Min. 475.00 / "ØA" Max. 510.00
Seal Width	L 10.50
Seal I.D.	450.00

510.00

Part No	SV2 5100 5400 085
Shaft Dia.	"ØA" Min. 510.00 / "ØA" Max. 540.00
Seal Width	L 10.50
Seal I.D.	472.00

540.00

Part No	SV2 5400 5750 085
Shaft Dia.	"ØA" Min. 540.00 / "ØA" Max. 575.00
Seal Width	L 10.50
Seal I.D.	495.00

575.00

Part No	SV2 5750 6250 085
Shaft Dia.	"ØA" Min. 575.00 / "ØA" Max. 625.00
Seal Width	L 10.50
Seal I.D.	540.00

625.00

Part No	SV2 6250 6750 085
Shaft Dia.	"ØA" Min. 625.00 / "ØA" Max. 675.00
Seal Width	L 10.50
Seal I.D.	600.00

675.00

Part No	SV2 6750 7100 085
Shaft Dia.	"ØA" Min. 675.00 / "ØA" Max. 710.00
Seal Width	L 10.50
Seal I.D.	630.00

710.00

Part No	SV2 7100 7400 085
Shaft Dia.	"ØA" Min. 710.00 / "ØA" Max. 740.00
Seal Width	L 10.50
Seal I.D.	670.00

740.00

Part No	SV2 7400 7750 085
Shaft Dia.	"ØA" Min. 740.00 / "ØA" Max. 775.00
Seal Width	L 10.50
Seal I.D.	705.00

775.00

Part No	SV2 7750 8250 085
Shaft Dia.	"ØA" Min. 775.00 / "ØA" Max. 825.00
Seal Width	L 10.50
Seal I.D.	745.00

825.00

Part No	SV2 8250 8750 085
Shaft Dia.	"ØA" Min. 825.00 / "ØA" Max. 875.00
Seal Width	L 10.50
Seal I.D.	785.00

875.00

Part No	SV2 8750 9250 085
Shaft Dia.	"ØA" Min. 875.00 / "ØA" Max. 925.00
Seal Width	L 10.50
Seal I.D.	825.00

925.00

Part No	SV2 9250 9750 085
Shaft Dia.	"ØA" Min. 925.00 / "ØA" Max. 975.00
Seal Width	L 10.50
Seal I.D.	865.00

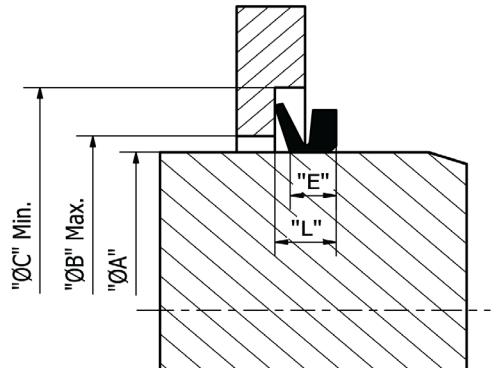

975.00

Part No	SV2X 0975 1025 085
Shaft Dia.	"ØA" Min. 975.00 / "ØA" Max. 1025.00
Seal Width	L 10.50
Seal I.D.	910.00

1035.00

Part No	SV2X 1035 1075 085
Shaft Dia.	"ØA" Min. 1035.00 / "ØA" Max. 1075.00
Seal Width	L 10.50
Seal I.D.	955.00

1075.00

Part No	SV2X 1075 1125 085
Shaft Dia.	"ØA" Min. 1075.00 / "ØA" Max. 1125.00
Seal Width	L 10.50
Seal I.D.	1000.00

1125.00

Part No	SV2X 1125 1175 085
Shaft Dia.	"ØA" Min. 1125.00 / "ØA" Max. 1175.00
Seal Width	L 10.50
Seal I.D.	1045.00

1175.00

Part No	SV2X 1175 1225 085
Shaft Dia.	"ØA" Min. 1175.00 / "ØA" Max. 1225.00
Seal Width	L 10.50
Seal I.D.	1090.00

1225.00

Part No	SV2X 1225 1275 085
Shaft Dia.	"ØA" Min. 1225.00 / "ØA" Max. 1275.00
Seal Width	L 10.50
Seal I.D.	1135.00

1275.00

Part No	SV2X 1275 1325 085
Shaft Dia.	"ØA" Min. 1275.00 / "ØA" Max. 1325.00
Seal Width	L 10.50
Seal I.D.	1180.00

1325.00

Part No	SV2X 1325 1375 085
Shaft Dia.	"ØA" Min. 1325.00 / "ØA" Max. 1375.00
Seal Width	L 10.50
Seal I.D.	1225.00

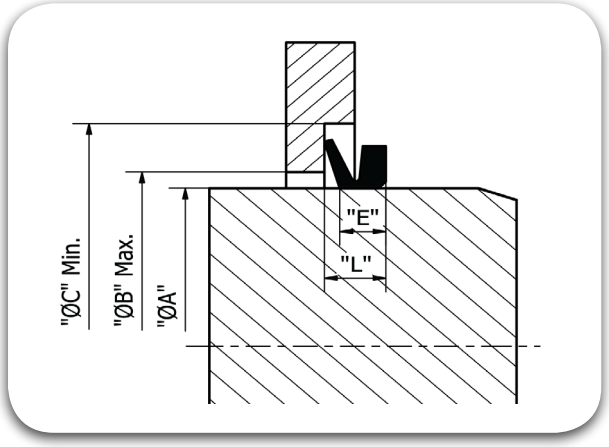

1375.00

Part No	SV2X 1375 1425 085
Shaft Dia.	"ØA" Min. 1375.00 / "ØA" Max. 1425.00
Seal Width	L 10.50
Seal I.D.	1270.00

1425.00

Part No	SV2X 1425 1475 085
Shaft Dia.	"ØA" Min. 1425.00 / "ØA" Max. 1475.00
Seal Width	L 10.50
Seal I.D.	1315.00

1475.00

Part No	SV2X 1475 1525 085
Shaft Dia.	"ØA" Min. 1475.00 / "ØA" Max. 1525.00
Seal Width	L 10.50
Seal I.D.	1360.00

1525.00

Part No	SV2X 1525 1575 085
Shaft Dia.	"ØA" Min. 1525.00 / "ØA" Max. 1575.00
Seal Width	L 10.50
Seal I.D.	1405.00

1575.00

Part No	SV2X 1575 1625 085
Shaft Dia.	"ØA" Min. 1575.00 / "ØA" Max. 1625.00
Seal Width	L 10.50
Seal I.D.	1450.00

1625.00

Part No	SV2X 1625 1675 085
Shaft Dia.	"ØA" Min. 1625.00 / "ØA" Max. 1675.00
Seal Width	L 10.50
Seal I.D.	1495.00

1675.00

Part No	SV2X 1675 1725 085
Shaft Dia.	"ØA" Min. 1675.00 / "ØA" Max. 1725.00
Seal Width	L 10.50
Seal I.D.	1540.00

1725.00

Part No	SV2X 1725 1775 085
Shaft Dia.	"ØA" Min. 1725.00 / "ØA" Max. 1775.00
Seal Width	L 10.50
Seal I.D.	1585.00

1775.00

Part No	SV2X 1775 1825 085
Shaft Dia.	"ØA" Min. 1775.00 / "ØA" Max. 1825.00
Seal Width	L 10.50
Seal I.D.	1630.00

1825.00

Part No	SV2X 1825 1875 085
Shaft Dia.	"ØA" Min. 1825.00 / "ØA" Max. 1875.00
Seal Width	L 10.50
Seal I.D.	1675.00

1875.00

Part No	SV2X 1875 1925 085	
Shaft Dia.	"ØA" Min. 1875.00	"ØA" Max. 1925.00
Seal Width	L 10.50	
Seal I.D.	1720.00	

1925.00

Part No	SV2X 1925 1975 085	
Shaft Dia.	"ØA" Min. 1925.00	"ØA" Max. 1975.00
Seal Width	L 10.50	
Seal I.D.	1765.00	

1975.00

Part No	SV2X 1975 2025 085	
Shaft Dia.	"ØA" Min. 1975.00	"ØA" Max. 2025.00
Seal Width	L 10.50	
Seal I.D.	1810.00	

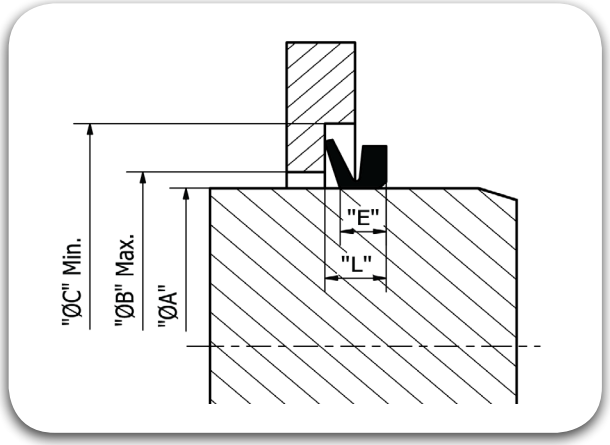

Rotary Seals

SV3

TRIADA
TECHNOLOGIES

#SealingExcellence

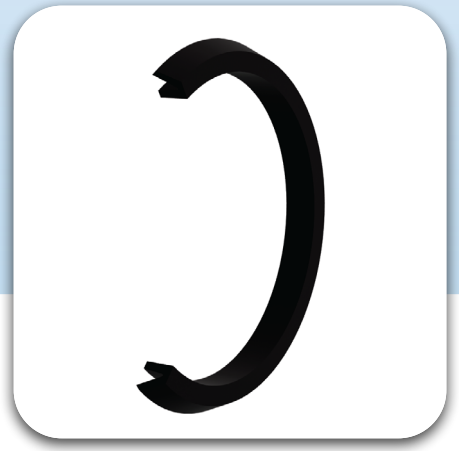
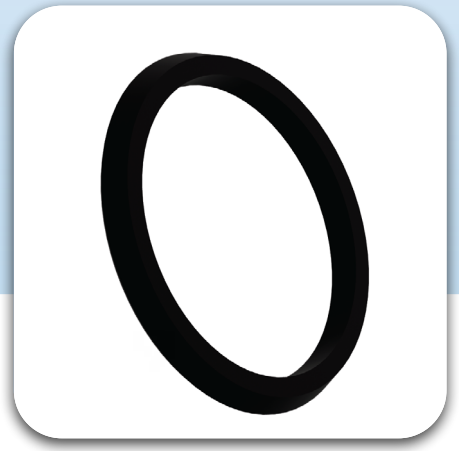

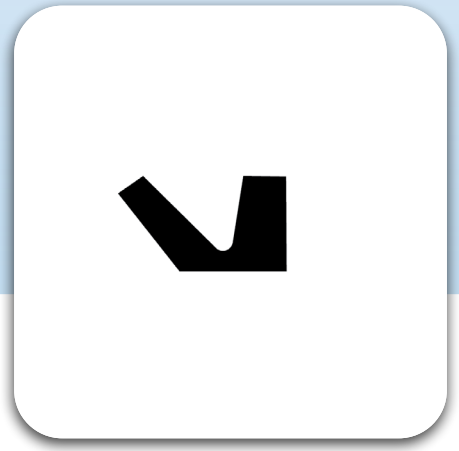

Description

The V-Ring is an all elastomer axial seal for rotary shafts and bearings. It rotates with the shaft and seals axially against a stationary counter face perpendicular to the shaft. This type of seal has been used widely for several applications and has proved to be reliable and effective against dust, dirt, water and oil splash and other media.
The ring consists of three parts:
a) The seal body, installed with interference to the shaft.
b) The hinge, acting as a spring connection between the body and the lip.
c) The conical and flexible sealing lip which provides the actual dynamic sealing against the counter face. The counter face can be the side wall of the bearing, a washer or any housing.

Diameter Range	Ø110.00 – Ø1200.00 (Larger dia. on request)
Standard material	TRIAFLEX® NBR 60 Shores (Other Compounds available, so as to suit the Application Conditions).
Temperature(°C)	-40ºC to 200ºC (Based on Elastomer Material).
Speed	Upto 15 m/s depending on the type of elastomer with the standard TRIAFLEX® T576 (NBR 75 Shores) it Can go upto 10 m/s. When used with elastomer in TRIAFLEX® T676 (FKM 75 Shores) it can go upto 15 m/s.
Fluids	Oil & Grease.

Material Details

Seal Material	Seal Material Code
TRIAFLEX® NBR 60	T561
TRIAFLEX® HNBR 60	T531
TRIAFLEX® FKM 60	T661
TRIAFLEX® EPDM 60	T761

Nomenclature

Part No	SV2	1035	1075	105	T561
	Seal profile	Shaft Dia. Min.	Shaft Dia. Max.	Seal Width x 10	Seal Material Code

TYPE	E	"ØB" Max.	"ØC" Min.
SV3	5.40	ØA + 4	ØA + 15

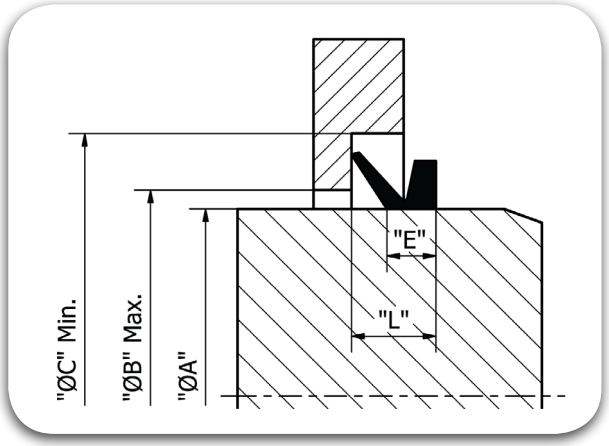

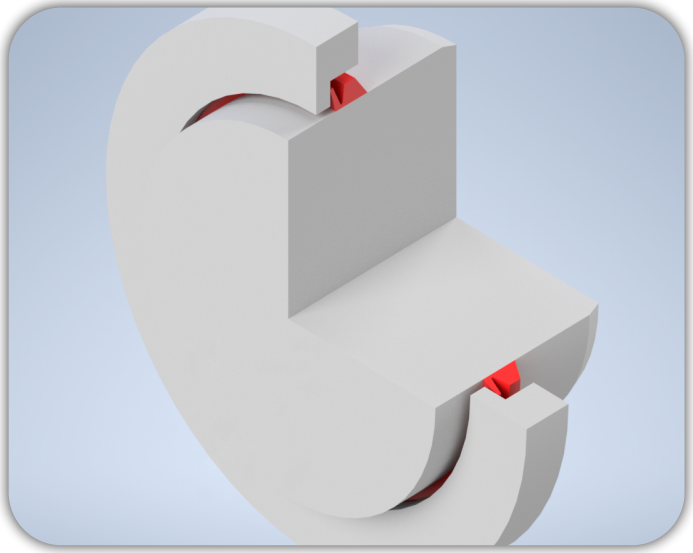

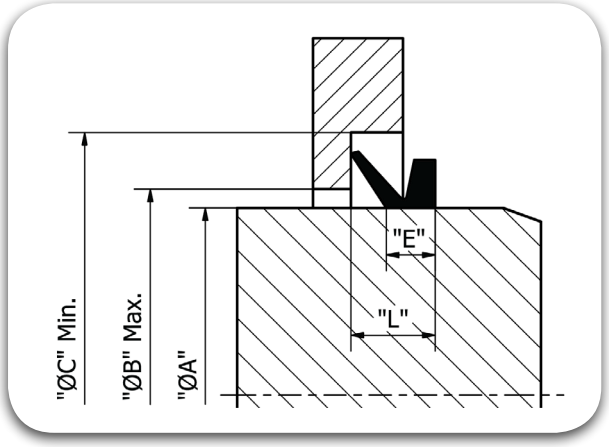

105.00

Part No	SV3 1050 1150 085
Shaft Dia.	"ØA" Min. 105.00 / "ØA" Max. 115.00
Seal Width	L 8.50
Seal I.D.	99.00

115.00

Part No	SV3 1150 1250 085
Shaft Dia.	"ØA" Min. 115.00 / "ØA" Max. 125.00
Seal Width	L 8.50
Seal I.D.	108.00

125.00

Part No	SV3 1250 1350 085
Shaft Dia.	"ØA" Min. 125.00 / "ØA" Max. 135.00
Seal Width	L 8.50
Seal I.D.	117.00

135.00

Part No	SV3 1350 1450 085
Shaft Dia.	"ØA" Min. 135.00 / "ØA" Max. 145.00
Seal Width	L 8.50
Seal I.D.	126.00

145.00

Part No	SV3 1450 1550 085
Shaft Dia.	"ØA" Min. 145.00 / "ØA" Max. 155.00
Seal Width	L 8.50
Seal I.D.	135.00

155.00

Part No	SV3 1550 1650 085
Shaft Dia.	"ØA" Min. 155.00 / "ØA" Max. 165.00
Seal Width	L 8.50
Seal I.D.	144.00

165.00

Part No	SV3 1650 1750 085
Shaft Dia.	"ØA" Min. 165.00 / "ØA" Max. 175.00
Seal Width	L 8.50
Seal I.D.	153.00

175.00

Part No	SV3 1750 1850 085
Shaft Dia.	"ØA" Min. 175.00 / "ØA" Max. 185.00
Seal Width	L 8.50
Seal I.D.	162.00

185.00

Part No	SV3 1850 1950 085
Shaft Dia.	"ØA" Min. 185.00 / "ØA" Max. 195.00
Seal Width	L 8.50
Seal I.D.	171.00

195.00

Part No	SV3 1950 2100 085
Shaft Dia.	"ØA" Min. 195.00 / "ØA" Max. 210.00
Seal Width	L 8.50
Seal I.D.	182.00

210.00

Part No	SV3 2100 2330 085
Shaft Dia.	"ØA" Min. 210.00 / "ØA" Max. 233.00
Seal Width	L 8.50
Seal I.D.	198.00

233.00

Part No	SV3 2330 2600 085
Shaft Dia.	"ØA" Min. 233.00 / "ØA" Max. 260.00
Seal Width	L 8.50
Seal I.D.	225.00

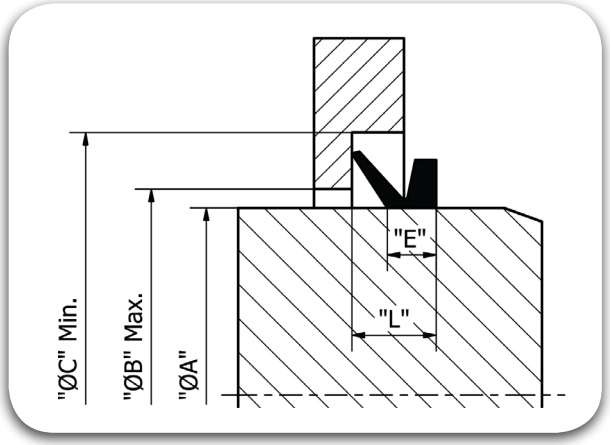

260.00

Part No	SV3 2600 2850 085
Shaft Dia.	"ØA" Min. 260.00 / "ØA" Max. 285.00
Seal Width	L 8.50
Seal I.D.	247.00

285.00

Part No	SV3 2850 3100 085
Shaft Dia.	"ØA" Min. 285.00 / "ØA" Max. 310.00
Seal Width	L 8.50
Seal I.D.	270.00

310.00

Part No	SV3 3100 3350 085
Shaft Dia.	"ØA" Min. 310.00 / "ØA" Max. 335.00
Seal Width	L 8.50
Seal I.D.	292.00

335.00

Part No	SV3 3350 3650 085
Shaft Dia.	"ØA" Min. 335.00 / "ØA" Max. 365.00
Seal Width	L 8.50
Seal I.D.	315.00

365.00

Part No	SV3 3650 3850 085
Shaft Dia.	"ØA" Min. 365.00 / "ØA" Max. 385.00
Seal Width	L 8.50
Seal I.D.	337.00

385.00

Part No	SV3 3850 4100 085
Shaft Dia.	"ØA" Min. 385.00 / "ØA" Max. 410.00
Seal Width	L 8.50
Seal I.D.	360.00

410.00

Part No	SV3 4100 4400 085
Shaft Dia.	"ØA" Min. 410.00 / "ØA" Max. 440.00
Seal Width	L 8.50
Seal I.D.	382.00

440.00

Part No	SV3 4400 4750 085
Shaft Dia.	"ØA" Min. 440.00 / "ØA" Max. 475.00
Seal Width	L 8.50
Seal I.D.	405.00

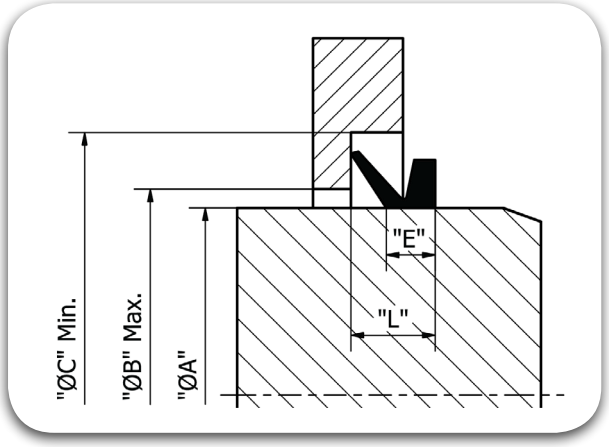

475.00

Part No	SV3 4750 5100 085
Shaft Dia.	"ØA" Min. 475.00 / "ØA" Max. 510.00
Seal Width	L 8.50
Seal I.D.	450.00

510.00

Part No	SV3 5100 5400 085
Shaft Dia.	"ØA" Min. 510.00 / "ØA" Max. 540.00
Seal Width	L 8.50
Seal I.D.	472.00

540.00

Part No	SV3 5400 5750 085
Shaft Dia.	"ØA" Min. 540.00 / "ØA" Max. 575.00
Seal Width	L 8.50
Seal I.D.	495.00

575.00

Part No	SV3 5750 6250 085
Shaft Dia.	"ØA" Min. 575.00 / "ØA" Max. 625.00
Seal Width	L 8.50
Seal I.D.	540.00

625.00

Part No	SV3 6250 6750 085
Shaft Dia.	"ØA" Min. 625.00 / "ØA" Max. 675.00
Seal Width	L 8.50
Seal I.D.	600.00

675.00

Part No	SV3 6750 7100 085
Shaft Dia.	"ØA" Min. 675.00 / "ØA" Max. 710.00
Seal Width	L 8.50
Seal I.D.	630.00

710.00

Part No	SV3 7100 7400 085
Shaft Dia.	"ØA" Min. 710.00 / "ØA" Max. 740.00
Seal Width	L 8.50
Seal I.D.	670.00

740.00

Part No	SV3 7400 7750 085
Shaft Dia.	"ØA" Min. 740.00 / "ØA" Max. 775.00
Seal Width	L 8.50
Seal I.D.	705.00

775.00

Part No	SV3 7750 8250 085
Shaft Dia.	"ØA" Min. 775.00 / "ØA" Max. 825.00
Seal Width	L 8.50
Seal I.D.	745.00

825.00

Part No	SV3 8250 8750 085
Shaft Dia.	"ØA" Min. 825.00 / "ØA" Max. 875.00
Seal Width	L 8.50
Seal I.D.	785.00

875.00

Part No	SV3 8750 9250 085
Shaft Dia.	"ØA" Min. 875.00 / "ØA" Max. 925.00
Seal Width	L 8.50
Seal I.D.	825.00

925.00

Part No	SV3 9250 9750 085
Shaft Dia.	"ØA" Min. 925.00 / "ØA" Max. 975.00
Seal Width	L 8.50
Seal I.D.	865.00

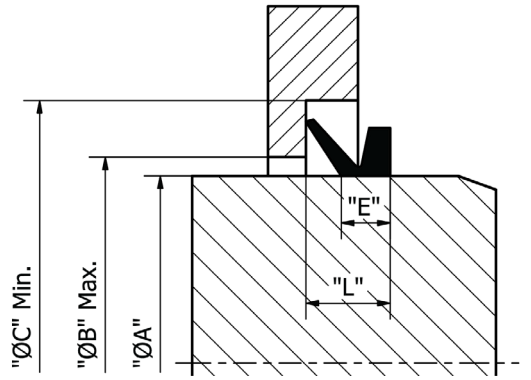

975.00

Part No	SV3X 0975 1025 085
Shaft Dia.	"ØA" Min. 975.00 / "ØA" Max. 1025.00
Seal Width	L 8.50
Seal I.D.	910.00

1035.00

Part No	SV3X 1035 1075 085
Shaft Dia.	"ØA" Min. 1035.00 / "ØA" Max. 1075.00
Seal Width	L 8.50
Seal I.D.	955.00

1075.00

Part No	SV3X 1075 1125 085
Shaft Dia.	"ØA" Min. 1075.00 / "ØA" Max. 1125.00
Seal Width	L 8.50
Seal I.D.	1000.00

1125.00

Part No	SV3X 1125 1175 085
Shaft Dia.	"ØA" Min. 1125.00 / "ØA" Max. 1175.00
Seal Width	L 8.50
Seal I.D.	1045.00

1175.00

Part No	SV3X 1175 1225 085
Shaft Dia.	"ØA" Min. 1175.00 / "ØA" Max. 1225.00
Seal Width	L 8.50
Seal I.D.	1090.00

1225.00

Part No	SV3X 1225 1275 085
Shaft Dia.	"ØA" Min. 1225.00 / "ØA" Max. 1275.00
Seal Width	L 8.50
Seal I.D.	1135.00

1275.00

Part No	SV3X 1275 1325 085
Shaft Dia.	"ØA" Min. 1275.00 / "ØA" Max. 1325.00
Seal Width	L 8.50
Seal I.D.	1180.00

1325.00

Part No	SV3X 1325 1375 085
Shaft Dia.	"ØA" Min. 1325.00 / "ØA" Max. 1375.00
Seal Width	L 8.50
Seal I.D.	1225.00

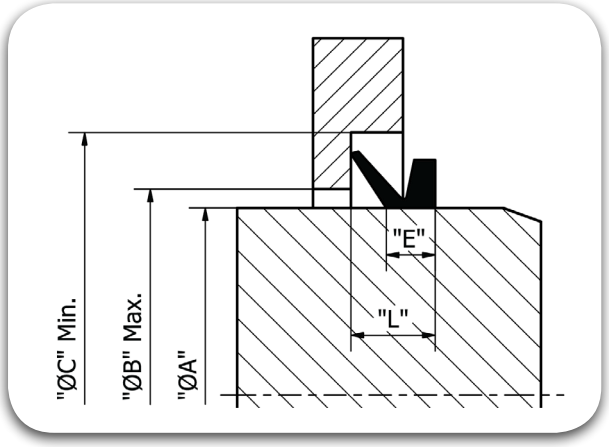

1375.00

Part No	SV3X 1375 1425 085
Shaft Dia.	"ØA" Min. 1375.00 / "ØA" Max. 1425.00
Seal Width	L 8.50
Seal I.D.	1270.00

1425.00

Part No	SV3X 1425 1475 085
Shaft Dia.	"ØA" Min. 1425.00 / "ØA" Max. 1475.00
Seal Width	L 8.50
Seal I.D.	1315.00

1475.00

Part No	SV3X 1475 1525 085
Shaft Dia.	"ØA" Min. 1475.00 / "ØA" Max. 1525.00
Seal Width	L 8.50
Seal I.D.	1360.00

1525.00

Part No	SV3X 1525 1575 085
Shaft Dia.	"ØA" Min. 1525.00 / "ØA" Max. 1575.00
Seal Width	L 8.50
Seal I.D.	1405.00

1575.00

Part No	SV3X 1575 1625 085
Shaft Dia.	"ØA" Min. 1575.00 / "ØA" Max. 1625.00
Seal Width	L 8.50
Seal I.D.	1450.00

1625.00

Part No	SV3X 1625 1675 085
Shaft Dia.	"ØA" Min. 1625.00 / "ØA" Max. 1675.00
Seal Width	L 8.50
Seal I.D.	1495.00

1675.00

Part No	SV3X 1675 1725 085
Shaft Dia.	"ØA" Min. 1675.00 / "ØA" Max. 1725.00
Seal Width	L 8.50
Seal I.D.	1540.00

1725.00

Part No	SV3X 1725 1775 085
Shaft Dia.	"ØA" Min. 1725.00 / "ØA" Max. 1775.00
Seal Width	L 8.50
Seal I.D.	1585.00

1775.00

Part No	SV3X 1775 1825 085
Shaft Dia.	"ØA" Min. 1775.00 / "ØA" Max. 1825.00
Seal Width	L 8.50
Seal I.D.	1630.00

1825.00

Part No	SV3X 1825 1875 085
Shaft Dia.	"ØA" Min. 1825.00 / "ØA" Max. 1875.00
Seal Width	L 8.50
Seal I.D.	1675.00

1875.00

Part No	SV3X 1875 1925 085
Shaft Dia.	"ØA" Min. 1875.00 / "ØA" Max. 1925.00
Seal Width	L 8.50
Seal I.D.	1720.00

1925.00

Part No	SV3X 1925 1975 085
Shaft Dia.	"ØA" Min. 1925.00 / "ØA" Max. 1975.00
Seal Width	L 8.50
Seal I.D.	1765.00

1975.00

Part No	SV3X 1975 2025 085
Shaft Dia.	"ØA" Min. 1975.00 / "ØA" Max. 2025.00
Seal Width	L 8.50
Seal I.D.	1810.00

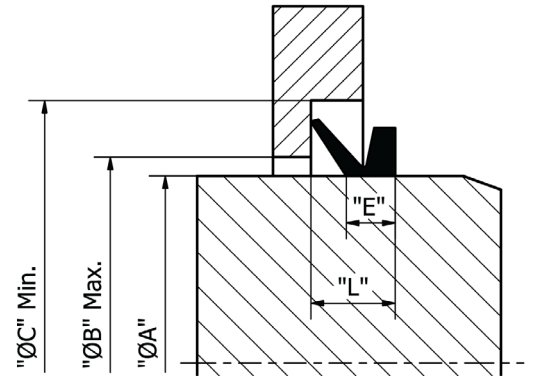

Rotary Seals

SV4

TRIADA
TECHNOLOGIES

#SealingExcellence




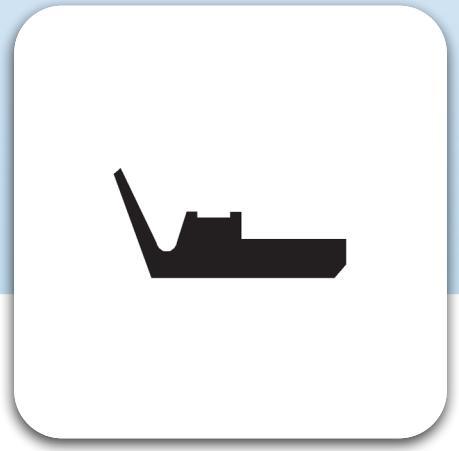

Description

The V-Ring is an all elastomer axial seal for rotary shafts and bearings. It rotates with the shaft and seals axially against a stationary counter face perpendicular to the shaft. This type of seal has been used widely for several applications and has proved to be reliable and effective against dust, dirt, water and oil splash and other media.
The ring consists of three parts:
a) The seal body, installed with interference to the shaft.
b) The hinge, acting as a spring connection between the body and the lip.
c) The conical and flexible sealing lip which provides the actual dynamic sealing against the counter face. The counter face can be the side wall of the bearing, a washer or any housing.

Diameter Range	Ø300.00 – 2010.00 (Larger dia. on request)
Standard material	TRIAFLEX® NBR 60 Shores (Other Compounds available, so as to suit the Application Conditions).
Temperature(°C)	-40° C to 200° C (Based on Elastomer Material).
Speed	Upto 15.00 m/s depending on the type of elastomer. With the standard TRIAFLEX® T576 (NBR 75 Shores) it Can go upto 10.00 m/s, when used with elastomer in TRIAFLEX® T676 (FKM 75 Shores) it can go upto 15.00 m/s.
Fluids	Oil & Grease.

Material Details

Seal Material	Seal Material Code
TRIAFLEX® NBR 60	T561
TRIAFLEX® HNBR 60	T531
TRIAFLEX® FKM 60	T661
TRIAFLEX® EPDM 60	T761

Nomenclature

Part No	SV4	300	305	85	T661
	Seal profile	Shaft Dia. Min.	Shaft Dia. Max.	Seal Width x 10	Seal Material Code

TYPE	"ØB" Max.	"ØC" Min.
SV4	ØA + 24	ØA + 115

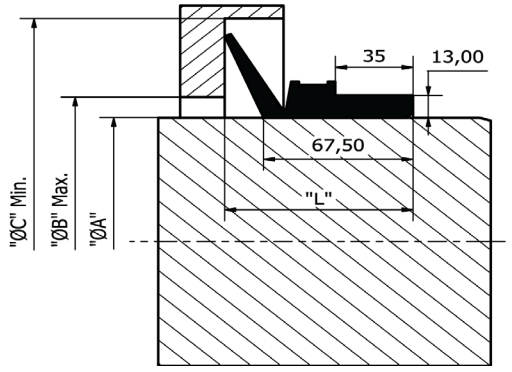

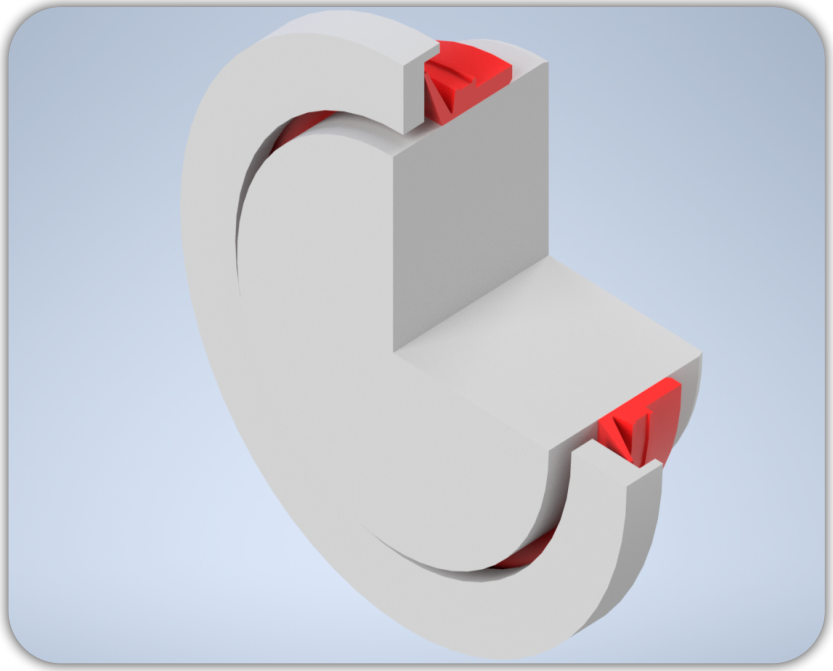

Rotary Seal

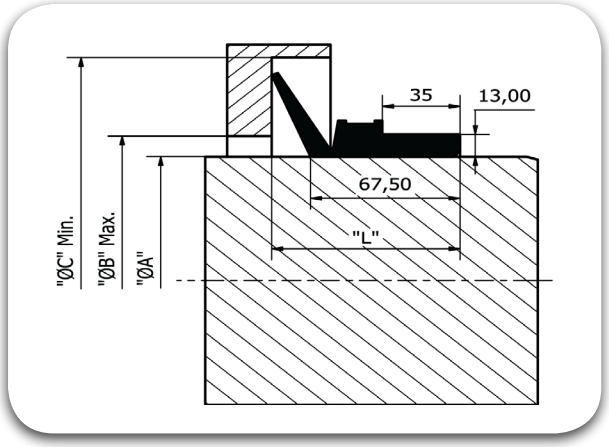

300.00

Part No	SV4 3000 3050 650
Shaft Dia.	"ØA" Min. 300.00 / "ØA" Max. 305.00
Seal Width	L 85.00
Seal I.D.	294.00

305.00

Part No	SV4 3050 3100 650
Shaft Dia.	"ØA" Min. 305.00 / "ØA" Max. 310.00
Seal Width	L 85.00
Seal I.D.	299.00

310.50

Part No	SV4 3105 3150 650
Shaft Dia.	"ØA" Min. 310.50 / "ØA" Max. 315.00
Seal Width	L 85.00
Seal I.D.	304.00

315.00

Part No	SV4 3150 3200 650
Shaft Dia.	"ØA" Min. 315.00 / "ØA" Max. 320.00
Seal Width	L 85.00
Seal I.D.	309.00

320.00

Part No	SV4 3200 3250 650
Shaft Dia.	"ØA" Min. 320.00 / "ØA" Max. 325.00
Seal Width	L 85.00
Seal I.D.	314.00

325.00

Part No	SV4 3250 3300 650
Shaft Dia.	"ØA" Min. 325.00 / "ØA" Max. 330.00
Seal Width	L 85.00
Seal I.D.	39.00

330.00

Part No	SV4 3300 3350 650
Shaft Dia.	"ØA" Min. 330.00 / "ØA" Max. 335.00
Seal Width	L 85.00
Seal I.D.	323.00

335.00

Part No	SV4 3350 3400 650
Shaft Dia.	"ØA" Min. 335.00 / "ØA" Max. 340.00
Seal Width	L 85.00
Seal I.D.	328.00

340.00

Part No	SV4 3400 3450 650
Shaft Dia.	"ØA" Min. 340.00 / "ØA" Max. 345.00
Seal Width	L 85.00
Seal I.D.	333.00

345.00

Part No	SV4 3450 3500 650
Shaft Dia.	"ØA" Min. 345.00 / "ØA" Max. 350.00
Seal Width	L 85.00
Seal I.D.	338.00

350.00

Part No	SV4 3500 3550 650
Shaft Dia.	"ØA" Min. 350.00 / "ØA" Max. 355.00
Seal Width	L 85.00
Seal I.D.	343.00

355.00

Part No	SV4 3550 3600 650
Shaft Dia.	"ØA" Min. 355.00 / "ØA" Max. 360.00
Seal Width	L 85.00
Seal I.D.	347.00

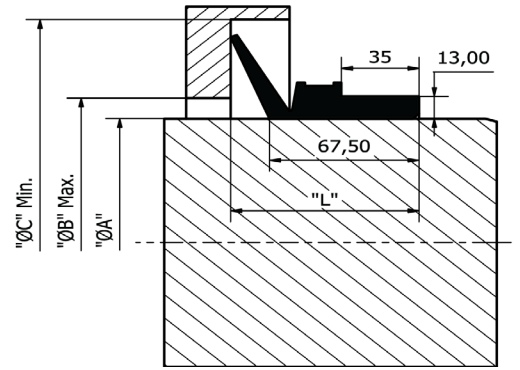

360.00

Part No	SV4 3600 3650 650
Shaft Dia.	"ØA" Min. 360.00 / "ØA" Max. 365.00
Seal Width	L 85.00
Seal I.D.	352.00

365.00

Part No	SV4 3650 3700 650
Shaft Dia.	"ØA" Min. 365.00 / "ØA" Max. 370.00
Seal Width	L 85.00
Seal I.D.	357.00

370.00

Part No	SV4 3700 3750 650
Shaft Dia.	"ØA" Min. 370.00 / "ØA" Max. 375.00
Seal Width	L 85.00
Seal I.D.	362.00

375.00

Part No	SV4 3750 3800 650
Shaft Dia.	"ØA" Min. 375.00 / "ØA" Max. 380.00
Seal Width	L 85.00
Seal I.D.	367.00

380.00

Part No	SV4 3800 3850 650
Shaft Dia.	"ØA" Min. 380.00 / "ØA" Max. 385.00
Seal Width	L 85.00
Seal I.D.	371.00

385.00

Part No	SV4 3850 3900 650
Shaft Dia.	"ØA" Min. 385.00 / "ØA" Max. 390.00
Seal Width	L 85.00
Seal I.D.	376.00

390.00

Part No	SV4 3900 3950 650
Shaft Dia.	"ØA" Min. 390.00 / "ØA" Max. 395.00
Seal Width	L 85.00
Seal I.D.	381.00

395.00

Part No	SV4 3950 4000 650
Shaft Dia.	"ØA" Min. 395.00 / "ØA" Max. 400.00
Seal Width	L 85.00
Seal I.D.	386.00

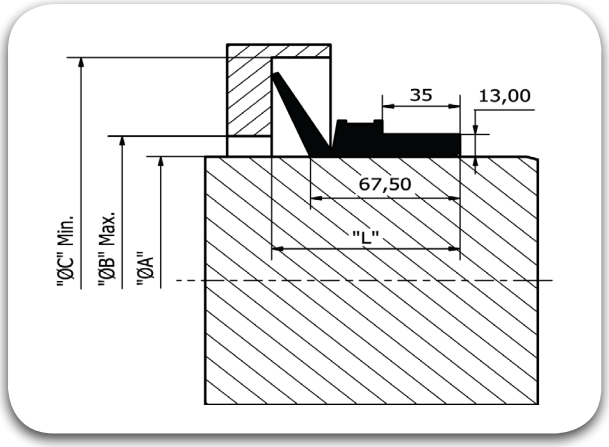

400.00

Part No	SV4 4000 4050 650
Shaft Dia.	"ØA" Min. 400.00 / "ØA" Max. 405.00
Seal Width	L 85.00
Seal I.D.	391.00

405.00

Part No	SV4 4050 4100 650
Shaft Dia.	"ØA" Min. 405.00 / "ØA" Max. 410.00
Seal Width	L 85.00
Seal I.D.	396.00

410.00

Part No	SV4 4100 4150 650
Shaft Dia.	"ØA" Min. 410.00 / "ØA" Max. 415.00
Seal Width	L 85.00
Seal I.D.	401.00

415.00

Part No	SV4 4150 4200 650
Shaft Dia.	"ØA" Min. 415.00 / "ØA" Max. 420.00
Seal Width	L 85.00
Seal I.D.	405.00

420.00

Part No	SV4 4200 4250 650
Shaft Dia.	"ØA" Min. 420.00 / "ØA" Max. 425.00
Seal Width	L 85.00
Seal I.D.	410.00

425.00

Part No	SV4 4250 4300 650
Shaft Dia.	"ØA" Min. 425.00 / "ØA" Max. 430.00
Seal Width	L 85.00
Seal I.D.	415.00

430.00

Part No	SV4 4300 4350 650
Shaft Dia.	"ØA" Min. 430.00 / "ØA" Max. 435.00
Seal Width	L 85.00
Seal I.D.	420.00

435.00

Part No	SV4 4350 4400 650
Shaft Dia.	"ØA" Min. 435.00 / "ØA" Max. 440.00
Seal Width	L 85.00
Seal I.D.	425.00

440.00

Part No	SV4 4400 4450 650
Shaft Dia.	"ØA" Min. 440.00 / "ØA" Max. 445.00
Seal Width	L 85.00
Seal I.D.	429.00

445.00

Part No	SV4 4450 4500 650
Shaft Dia.	"ØA" Min. 445.00 / "ØA" Max. 450.00
Seal Width	L 85.00
Seal I.D.	434.00

450.00

Part No	SV4 4500 4550 650
Shaft Dia.	"ØA" Min. 450.00 / "ØA" Max. 455.00
Seal Width	L 85.00
Seal I.D.	439.00

455.00

Part No	SV4 4550 4600 650
Shaft Dia.	"ØA" Min. 455.00 / "ØA" Max. 460.00
Seal Width	L 85.00
Seal I.D.	444.00

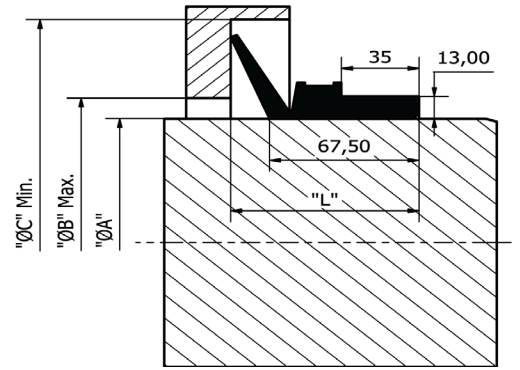

460.00

Part No	SV4 4600 4650 650
Shaft Dia.	"ØA" Min. 460.00 / "ØA" Max. 465.00
Seal Width	L 85.00
Seal I.D.	448.00

465.00

Part No	SV4 4650 4700 650
Shaft Dia.	"ØA" Min. 465.00 / "ØA" Max. 470.00
Seal Width	L 85.00
Seal I.D.	453.00

470.00

Part No	SV4 4700 4750 650
Shaft Dia.	"ØA" Min. 470.00 / "ØA" Max. 475.00
Seal Width	L 85.00
Seal I.D.	458.00

475.00

Part No	SV4 4750 4800 650
Shaft Dia.	"ØA" Min. 475.00 / "ØA" Max. 480.00
Seal Width	L 85.00
Seal I.D.	463.00

480.00

Part No	SV4 4800 4850 650
Shaft Dia.	"ØA" Min. 480.00 / "ØA" Max. 485.00
Seal Width	L 85.00
Seal I.D.	468.00

485.00

Part No	SV4 4850 4900 650
Shaft Dia.	"ØA" Min. 485.00 / "ØA" Max. 490.00
Seal Width	L 85.00
Seal I.D.	473.00

490.00

Part No	SV4 4900 4950 650
Shaft Dia.	"ØA" Min. 490.00 / "ØA" Max. 495.00
Seal Width	L 85.00
Seal I.D.	478.00

495.00

Part No	SV4 4950 5000 650
Shaft Dia.	"ØA" Min. 495.00 / "ØA" Max. 500.00
Seal Width	L 85.00
Seal I.D.	483.00

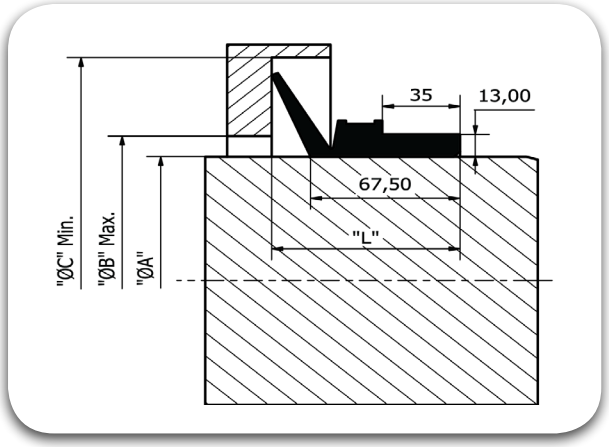

500.00

Part No	SV4 5000 5050 650	
Shaft Dia.	"ØA" Min. 500.00	"ØA" Max. 505.00
Seal Width	L 85.00	
Seal I.D.	488.00	

505.00

Part No	SV4 5050 5100 650	
Shaft Dia.	"ØA" Min. 505.00	"ØA" Max. 510.00
Seal Width	L 85.00	
Seal I.D.	493.00	

510.00

Part No	SV4 5100 5150 650	
Shaft Dia.	"ØA" Min. 510.00	"ØA" Max. 515.00
Seal Width	L 85.00	
Seal I.D.	497.00	

515.00

Part No	SV4 5150 5200 650	
Shaft Dia.	"ØA" Min. 515.00	"ØA" Max. 520.00
Seal Width	L 85.00	
Seal I.D.	502.00	

520.00

Part No	SV4 5200 5250 650	
Shaft Dia.	"ØA" Min. 520.00	"ØA" Max. 525.00
Seal Width	L 85.00	
Seal I.D.	507.00	

525.00

Part No	SV4 5250 5300 650	
Shaft Dia.	"ØA" Min. 525.00	"ØA" Max. 530.00
Seal Width	L 85.00	
Seal I.D.	512.00	

530.00

Part No	SV4 5300 5350 650	
Shaft Dia.	"ØA" Min. 530.00	"ØA" Max. 535.00
Seal Width	L 85.00	
Seal I.D.	517.00	

535.00

Part No	SV4 5350 5400 650	
Shaft Dia.	"ØA" Min. 535.00	"ØA" Max. 540.00
Seal Width	L 85.00	
Seal I.D.	521.00	

540.00

Part No	SV4 5400 5450 650	
Shaft Dia.	"ØA" Min. 540.00	"ØA" Max. 545.00
Seal Width	L 85.00	
Seal I.D.	526.00	

545.00

Part No	SV4 5450 5550 650	
Shaft Dia.	"ØA" Min. 545.00	"ØA" Max. 555.00
Seal Width	L 85.00	
Seal I.D.	531.00	

550.00

Part No	SV4 5500 5550 650
Shaft Dia.	"ØA" Min. 550.00 / "ØA" Max. 555.00
Seal Width	L 85.00
Seal I.D.	536.00

555.00

Part No	SV4 5550 5600 650
Shaft Dia.	"ØA" Min. 555.00 / "ØA" Max. 560.00
Seal Width	L 85.00
Seal I.D.	541.00

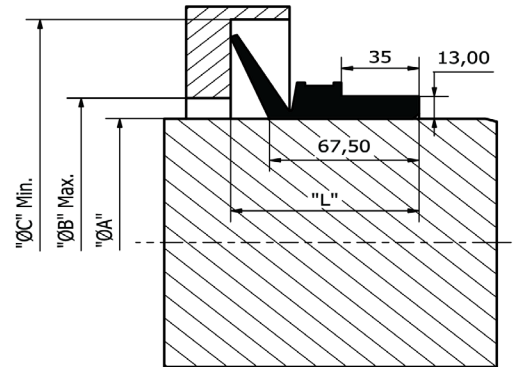

560.00

Part No	SV4 5600 5650 650
Shaft Dia.	"ØA" Min. 560.00 / "ØA" Max. 565.00
Seal Width	L 85.00
Seal I.D.	546.00

565.00

Part No	SV4 5650 5700 650
Shaft Dia.	"ØA" Min. 565.00 / "ØA" Max. 570.00
Seal Width	L 85.00
Seal I.D.	550.00

570.00

Part No	SV4 5700 5750 650
Shaft Dia.	"ØA" Min. 570.00 / "ØA" Max. 575.00
Seal Width	L 85.00
Seal I.D.	555.00

575.00

Part No	SV4 5750 5800 650
Shaft Dia.	"ØA" Min. 575.00 / "ØA" Max. 580.00
Seal Width	L 85.00
Seal I.D.	560.00

580.00

Part No	SV4 5800 5850 650
Shaft Dia.	"ØA" Min. 580.00 / "ØA" Max. 585.00
Seal Width	L 85.00
Seal I.D.	565.00

585.00

Part No	SV4 5850 5900 650
Shaft Dia.	"ØA" Min. 585.00 / "ØA" Max. 590.00
Seal Width	L 85.00
Seal I.D.	570.00

590.00

Part No	SV4 5900 6000 650
Shaft Dia.	"ØA" Min. 590.00 / "ØA" Max. 600.00
Seal Width	L 85.00
Seal I.D.	575.00

600.00

Part No	SV4 6000 6100 650
Shaft Dia.	"ØA" Min. 600.00 / "ØA" Max. 610.00
Seal Width	L 85.00
Seal I.D.	582.00

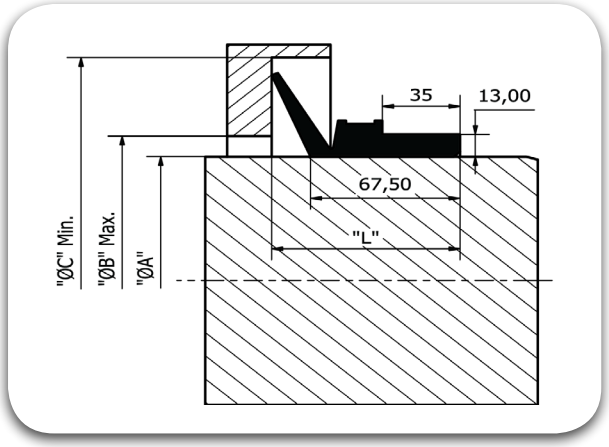

610.00

Part No	SV4 6100 6200 650	
Shaft Dia.	"ØA" Min. 610.00	"ØA" Max. 620.00
Seal Width	L 85.00	
Seal I.D.	592.00	

620.00

Part No	SV4 6200 6300 650	
Shaft Dia.	"ØA" Min. 620.00	"ØA" Max. 630.00
Seal Width	L 85.00	
Seal I.D.	602.00	

630.00

Part No	SV4 6300 6400 650	
Shaft Dia.	"ØA" Min. 630.00	"ØA" Max. 640.00
Seal Width	L 85.00	
Seal I.D.	612.00	

640.00

Part No	SV4 6400 6500 650	
Shaft Dia.	"ØA" Min. 640.00	"ØA" Max. 650.00
Seal Width	L 85.00	
Seal I.D.	621.00	

650.00

Part No	SV4 6500 6600 650	
Shaft Dia.	"ØA" Min. 650.00	"ØA" Max. 660.00
Seal Width	L 85.00	
Seal I.D.	631.00	

660.00

Part No	SV4 6600 6700 650	
Shaft Dia.	"ØA" Min. 660.00	"ØA" Max. 670.00
Seal Width	L 85.00	
Seal I.D.	640.00	

670.00

Part No	SV4 6700 6800 650	
Shaft Dia.	"ØA" Min. 670.00	"ØA" Max. 680.00
Seal Width	L 85.00	
Seal I.D.	650.00	

680.00

Part No	SV4 6800 6900 650	
Shaft Dia.	"ØA" Min. 680.00	"ØA" Max. 690.00
Seal Width	L 85.00	
Seal I.D.	660.00	

690.00

Part No	SV4 6900 7000 650	
Shaft Dia.	"ØA" Min. 690.00	"ØA" Max. 700.00
Seal Width	L 85.00	
Seal I.D.	670.00	

700.00

Part No	SV4 7000 7100 650	
Shaft Dia.	"ØA" Min. 700.00	"ØA" Max. 710.00
Seal Width	L 85.00	
Seal I.D.	680.00	

710.00

Part No	SV4 7100 7200 650
Shaft Dia.	"ØA" Min. 710.00 / "ØA" Max. 720.00
Seal Width	L 85.00
Seal I.D.	689.00

720.00

Part No	SV4 7200 7300 650
Shaft Dia.	"ØA" Min. 720.00 / "ØA" Max. 730.00
Seal Width	L 85.00
Seal I.D.	699.00

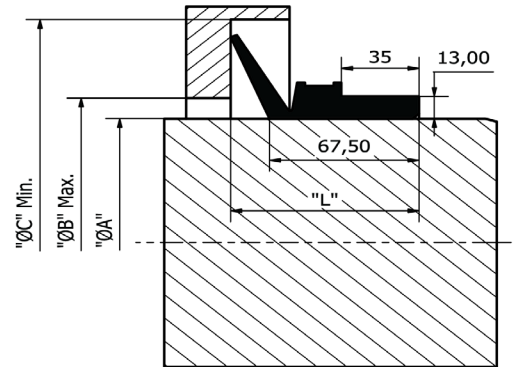

730.00

Part No	SV4 7300 7400 650
Shaft Dia.	"ØA" Min. 730.00 / "ØA" Max. 740.00
Seal Width	L 85.00
Seal I.D.	709.00

740.00

Part No	SV4 7400 7500 650
Shaft Dia.	"ØA" Min. 740.00 / "ØA" Max. 750.00
Seal Width	L 85.00
Seal I.D.	718.00

750.00

Part No	SV4 7500 7580 650
Shaft Dia.	"ØA" Min. 750.00 / "ØA" Max. 758.00
Seal Width	L 85.00
Seal I.D.	728.00

758.00

Part No	SV4 7580 7660 650
Shaft Dia.	"ØA" Min. 758.00 / "ØA" Max. 766.00
Seal Width	L 85.00
Seal I.D.	735.00

766.00

Part No	SV4 7660 7740 650
Shaft Dia.	"ØA" Min. 766.00 / "ØA" Max. 774.00
Seal Width	L 85.00
Seal I.D.	743.00

774.00

Part No	SV4 7740 7830 650
Shaft Dia.	"ØA" Min. 774.00 / "ØA" Max. 783.00
Seal Width	L 85.00
Seal I.D.	751.00

783.00

Part No	SV4 7830 7920 650
Shaft Dia.	"ØA" Min. 783.00 / "ØA" Max. 792.00
Seal Width	L 85.00
Seal I.D.	759.00

792.00

Part No	SV4 7920 8010 650
Shaft Dia.	"ØA" Min. 792.00 / "ØA" Max. 801.00
Seal Width	L 85.00
Seal I.D.	768.00

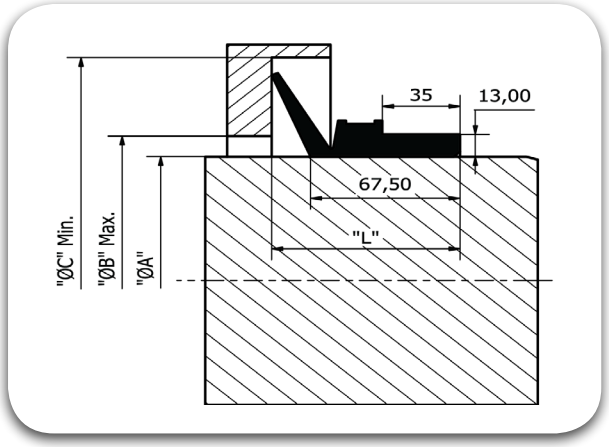

801.00

Part No	SV4 8010 8100 650
Shaft Dia.	"ØA" Min. 801.00 / "ØA" Max. 810.00
Seal Width	L 85.00
Seal I.D.	777.00

810.00

Part No	SV4 8100 8210 650
Shaft Dia.	"ØA" Min. 810.00 / "ØA" Max. 821.00
Seal Width	L 85.00
Seal I.D.	786.00

821.00

Part No	SV4 8210 8310 650
Shaft Dia.	"ØA" Min. 821.00 / "ØA" Max. 831.00
Seal Width	L 85.00
Seal I.D.	796.00

831.00

Part No	SV4 8310 8410 650
Shaft Dia.	"ØA" Min. 831.00 / "ØA" Max. 841.00
Seal Width	L 85.00
Seal I.D.	805.00

841.00

Part No	SV4 8410 8510 650
Shaft Dia.	"ØA" Min. 841.00 / "ØA" Max. 851.00
Seal Width	L 85.00
Seal I.D.	814.00

851.00

Part No	SV4 8510 8610 650
Shaft Dia.	"ØA" Min. 851.00 / "ØA" Max. 861.00
Seal Width	L 85.00
Seal I.D.	824.00

861.00

Part No	SV4 8610 8710 650
Shaft Dia.	"ØA" Min. 861.00 / "ØA" Max. 871.00
Seal Width	L 85.00
Seal I.D.	833.00

871.00

Part No	SV4 8710 8820 650
Shaft Dia.	"ØA" Min. 871.00 / "ØA" Max. 882.00
Seal Width	L 85.00
Seal I.D.	843.00

882.00

Part No	SV4 8820 8920 650
Shaft Dia.	"ØA" Min. 882.00 / "ØA" Max. 892.00
Seal Width	L 85.00
Seal I.D.	853.00

892.00

Part No	SV4 8920 9120 650
Shaft Dia.	"ØA" Min. 892.00 / "ØA" Max. 912.00
Seal Width	L 85.00
Seal I.D.	871.00

912.00

Part No	SV4 9120 9220 650
Shaft Dia.	"ØA" Min. 912.00 / "ØA" Max. 922.00
Seal Width	L 85.00
Seal I.D.	880.00

922.00

Part No	SV4 9220 9330 650
Shaft Dia.	"ØA" Min. 922.00 / "ØA" Max. 933.00
Seal Width	L 85.00
Seal I.D.	890.00

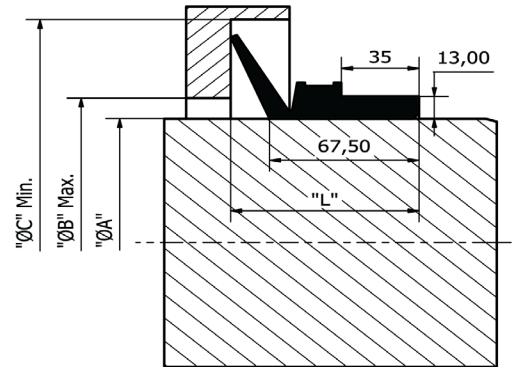

933.00

Part No	SV4 9330 9440 650
Shaft Dia.	"ØA" Min. 933.00 / "ØA" Max. 944.00
Seal Width	L 85.00
Seal I.D.	900.00

944.00

Part No	SV4 9440 9550 650
Shaft Dia.	"ØA" Min. 944.00 / "ØA" Max. 955.00
Seal Width	L 85.00
Seal I.D.	911.00

955.00

Part No	SV4 9550 9660 650
Shaft Dia.	"ØA" Min. 955.00 / "ØA" Max. 966.00
Seal Width	L 85.00
Seal I.D.	921.00

966.00

Part No	SV4 9660 9770 650
Shaft Dia.	"ØA" Min. 966.00 / "ØA" Max. 977.00
Seal Width	L 85.00
Seal I.D.	932.00

977.00

Part No	SV4 9770 9880 650
Shaft Dia.	"ØA" Min. 977.00 / "ØA" Max. 988.00
Seal Width	L 85.00
Seal I.D.	942.00

988.00

Part No	SV4 9880 9990 650
Shaft Dia.	"ØA" Min. 988.00 / "ØA" Max. 999.00
Seal Width	L 85.00
Seal I.D.	953.00

999.00

Part No	SV4 9990 1010 650
Shaft Dia.	"ØA" Min. 999.00 / "ØA" Max. 1010.00
Seal Width	L 85.00
Seal I.D.	963.00

1010.00

Part No	SV4X 1010 1025 065
Shaft Dia.	"ØA" Min. 1010.00 / "ØA" Max. 1025.00
Seal Width	L 85.00
Seal I.D.	973.00

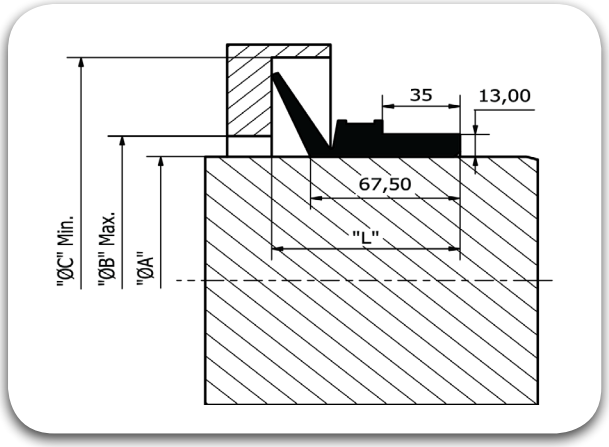

1025.00

Part No	SV4X 1025 1045 065
Shaft Dia.	"ØA" Min. 1025.00 / "ØA" Max. 1045.00
Seal Width	L 85.00
Seal I.D.	990.00

1045.00

Part No	SV4X 1045 1065 065
Shaft Dia.	"ØA" Min. 1045.00 / "ØA" Max. 1065.00
Seal Width	L 85.00
Seal I.D.	1008.00

1065.00

Part No	SV4X 1065 1085 065
Shaft Dia.	"ØA" Min. 1065.00 / "ØA" Max. 1085.00
Seal Width	L 85.00
Seal I.D.	1027.00

1085.00

Part No	SV4X 1085 1105 065
Shaft Dia.	"ØA" Min. 1085.00 / "ØA" Max. 1105.00
Seal Width	L 85.00
Seal I.D.	1045.00

1105.00

Part No	SV4X 1105 1125 065
Shaft Dia.	"ØA" Min. 1105.00 / "ØA" Max. 1125.00
Seal Width	L 85.00
Seal I.D.	1065.00

1125.00

Part No	SV4X 1125 1145 065
Shaft Dia.	"ØA" Min. 1125.00 / "ØA" Max. 1145.00
Seal Width	L 85.00
Seal I.D.	1084.00

1145.00

Part No	SV4X 1145 1165 065
Shaft Dia.	"ØA" Min. 1145.00 / "ØA" Max. 1165.00
Seal Width	L 85.00
Seal I.D.	1103.00

1165.00

Part No	SV4X 1165 1185 065
Shaft Dia.	"ØA" Min. 1165.00 / "ØA" Max. 1185.00
Seal Width	L 85.00
Seal I.D.	1121.00

1185.00

Part No	SV4X 1185 1205 065
Shaft Dia.	"ØA" Min. 1185.00 / "ØA" Max. 1205.00
Seal Width	L 85.00
Seal I.D.	1139.00

1205.00

Part No	SV4X 1205 1225 065
Shaft Dia.	"ØA" Min. 1205.00 / "ØA" Max. 1225.00
Seal Width	L 85.00
Seal I.D.	1157.00

1225.00

Part No	SV4X 1225 1245 065
Shaft Dia.	"ØA" Min. 1225.00 / "ØA" Max. 1245.00
Seal Width	L 85.00
Seal I.D.	1176.00

1245.00

Part No	SV4X 1245 1270 065
Shaft Dia.	"ØA" Min. 1245.00 / "ØA" Max. 1270.00
Seal Width	L 85.00
Seal I.D.	1195.00

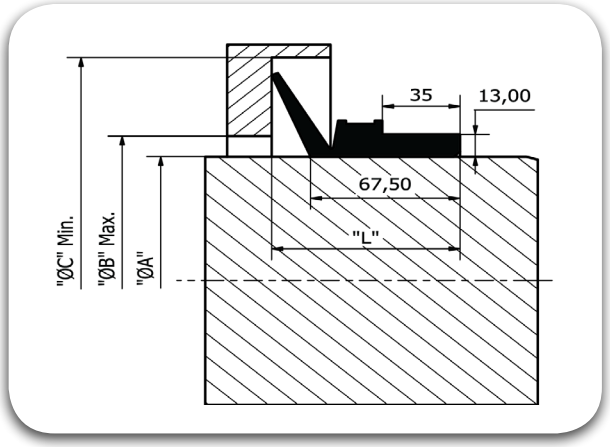

1270.00

Part No	SV4X 1270 1295 065
Shaft Dia.	"ØA" Min. 1270.00 / "ØA" Max. 1295.00
Seal Width	L 85.00
Seal I.D.	1218.00

1295.00

Part No	SV4X 1295 1315 065
Shaft Dia.	"ØA" Min. 1295.00 / "ØA" Max. 1315.00
Seal Width	L 85.00
Seal I.D.	1240.00

1315.00

Part No	SV4X 1315 1340 065
Shaft Dia.	"ØA" Min. 1315.00 / "ØA" Max. 1340.00
Seal Width	L 85.00
Seal I.D.	1259.00

1340.00

Part No	SV4X 1340 1365 065
Shaft Dia.	"ØA" Min. 1340.00 / "ØA" Max. 1365.00
Seal Width	L 85.00
Seal I.D.	1281.00

1365.00

Part No	SV4X 1365 1390 065
Shaft Dia.	"ØA" Min. 1365.00 / "ØA" Max. 1390.00
Seal Width	L 85.00
Seal I.D.	135.00

1390.00

Part No	SV4X 1390 1415 065
Shaft Dia.	"ØA" Min. 1390.00 / "ØA" Max. 1415.00
Seal Width	L 85.00
Seal I.D.	1328.00

1415.00

Part No	SV4X 1415 1440 065
Shaft Dia.	"ØA" Min. 1415.00 / "ØA" Max. 1440.00
Seal Width	L 85.00
Seal I.D.	1350.00

1440.00

Part No	SV4X 1440 1465 065
Shaft Dia.	"ØA" Min. 1440.00 / "ØA" Max. 1465.00
Seal Width	L 85.00
Seal I.D.	1374.00

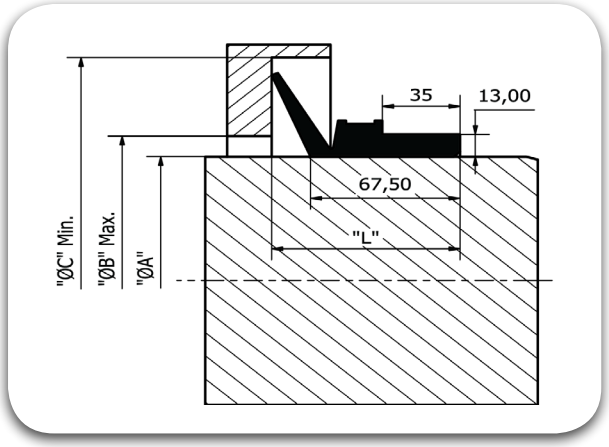

1465.00

Part No	SV4X 1465 1490 065
Shaft Dia.	"ØA" Min. 1465.00 / "ØA" Max. 1490.00
Seal Width	L 85.00
Seal I.D.	1397.00

1490.00

Part No	SV4X 1490 1515 065
Shaft Dia.	"ØA" Min. 1490.00 / "ØA" Max. 1515.00
Seal Width	L 85.00
Seal I.D.	1419.00

1515.00

Part No	SV4X 1515 1540 065
Shaft Dia.	"ØA" Min. 1515.00 / "ØA" Max. 1540.00
Seal Width	L 85.00
Seal I.D.	1443.00

1540.00

Part No	SV4X 1540 1570 065
Shaft Dia.	"ØA" Min. 1540.00 / "ØA" Max. 1570.00
Seal Width	L 85.00
Seal I.D.	1467.00

1570.00

Part No	SV4X 1570 1600 065
Shaft Dia.	"ØA" Min. 1570.00 / "ØA" Max. 1600.00
Seal Width	L 85.00
Seal I.D.	1495.00

1600.00

Part No	SV4X 1600 1640 065
Shaft Dia.	"ØA" Min. 1600.00 / "ØA" Max. 1640.00
Seal Width	L 85.00
Seal I.D.	1524.00

1640.00

Part No	SV4X 1640 1680 065
Shaft Dia.	"ØA" Min. 1640.00 / "ØA" Max. 1680.00
Seal Width	L 85.00
Seal I.D.	1559.00

1680.00

Part No	SV4X 1680 1720 065
Shaft Dia.	"ØA" Min. 1680.00 / "ØA" Max. 1720.00
Seal Width	L 85.00
Seal I.D.	1596.00

1720.00

Part No	SV4X 1720 1765 065
Shaft Dia.	"ØA" Min. 1720.00 / "ØA" Max. 1765.00
Seal Width	L 85.00
Seal I.D.	1632.00

1765.00

Part No	SV4X 1765 1810 065
Shaft Dia.	"ØA" Min. 1765.00 / "ØA" Max. 1810.00
Seal Width	L 85.00
Seal I.D.	1671.00

1810.00

Part No	SV4X 1810 1855 065	
Shaft Dia.	"ØA" Min. 1810.00	"ØA" Max. 1855.00
Seal Width	L 85.00	
Seal I.D.	1714.00	

1855.00

Part No	SV4X 1855 1905 065	
Shaft Dia.	"ØA" Min. 1855.00	"ØA" Max. 1905.00
Seal Width	L 85.00	
Seal I.D.	1753.00	

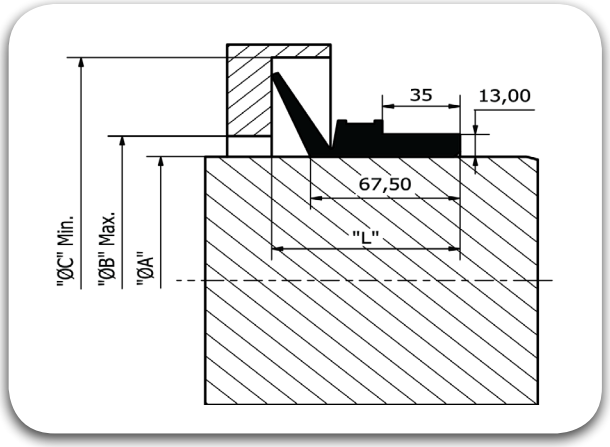

1905.00

Part No	SV4X 1905 1955 065	
Shaft Dia.	"ØA" Min. 1905.00	"ØA" Max. 1955.00
Seal Width	L 85.00	
Seal I.D.	1794.00	

1955.00

Part No	SV4X 1955 2010 065	
Shaft Dia.	"ØA" Min. 1955.00	"ØA" Max. 2010.00
Seal Width	L 85.00	
Seal I.D.	1844.00	

Rotary Seals

SV5

TRIADA
TECHNOLOGIES

#SealingExcellence

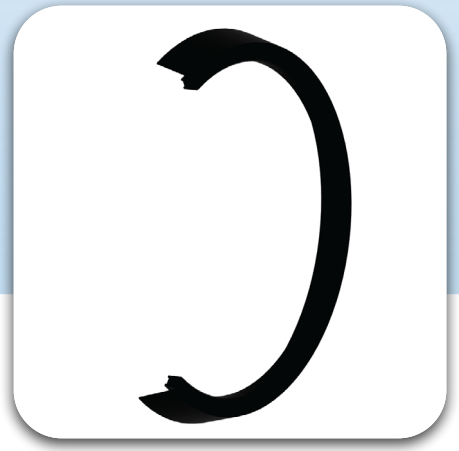
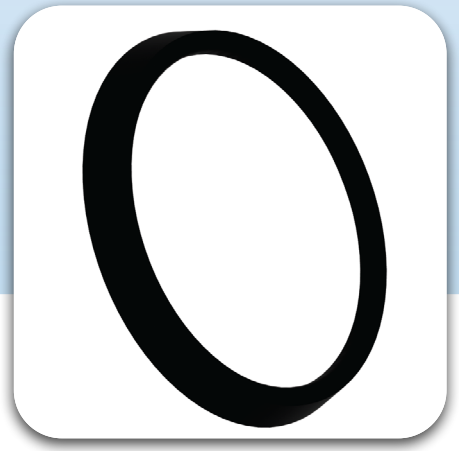



Description

The V-Ring is an all elastomer axial seal for rotary shafts and bearings. It rotates with the shaft and seals axially against a stationary counter face perpendicular to the shaft. This type of seal has been used widely for several applications and has proved to be reliable and effective against dust, dirt, water and oil splash and other media.
The ring consists of three parts:
a) The seal body, installed with interference to the shaft.
b) The hinge, acting as a spring connection between the body and the lip.
c) The conical and flexible sealing lip which provides the actual dynamic sealing against the counter face. The counter face can be the side wall of the bearing, a washer or any housing.

Diameter Range	Ø300.00 – Ø2010.00 (Larger dia. on request)
Standard material	TRIAFLEX® NBR 60 Shores (Other Compounds available, so as to suit the Application Conditions).
Temperature(°C)	-40ºC to 200ºC (Based on Elastomer Material).
Speed	Upto 15 m/s depending on the type of elastomer with the standard TRIAFLEX® T576 (NBR 75 Shores) it Can go upto 10 m/s. When used with elastomer in TRIAFLEX® T676 (FKM 75 Shores) it can go upto 15 m/s.
Fluids	Oil & Grease.

Material Details

Seal Material	Seal Material Code
TRIAFLEX® NBR 60	T561
TRIAFLEX® HNBR 60	T531
TRIAFLEX® FKM 60	T661
TRIAFLEX® EPDM 60	T761

Nomenclature

Part No	SV5	300	305	85	T661
	Seal profile	Shaft Dia. Min.	Shaft Dia. Max.	Seal Width x 10	Seal Material Code

TYPE	"ØB" Max.	"ØC" Min.
SV5	ØA + 24	ØA + 115

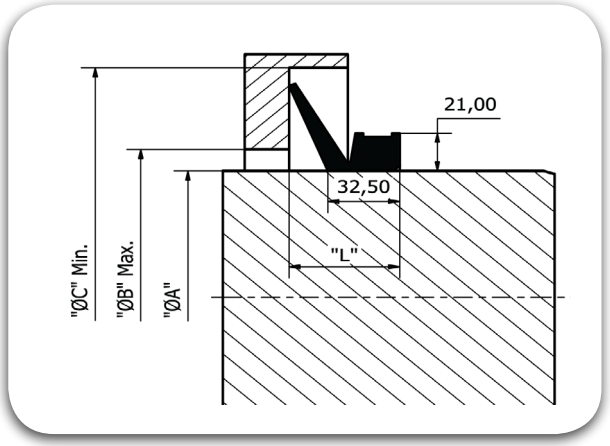

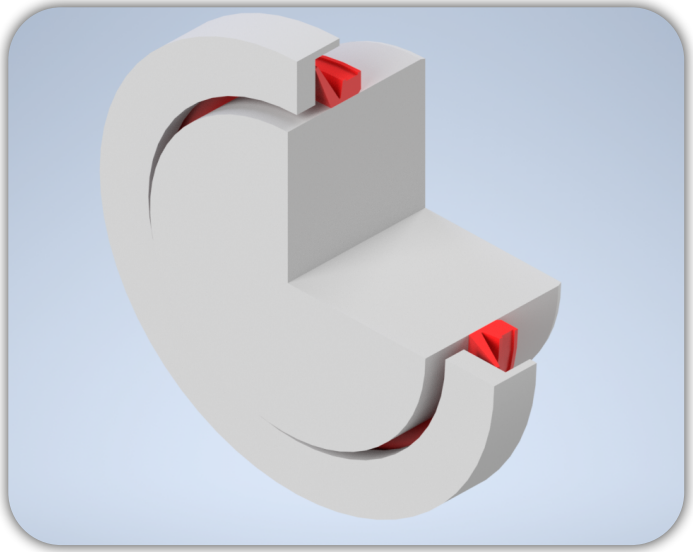

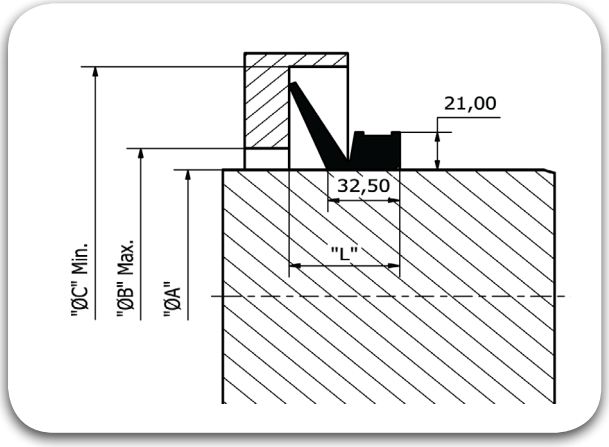

300.00

Part No	SV5 3000 3050 650
Shaft Dia.	"ØA" Min. 300.00 / "ØA" Max. 305.00
Seal Width	L 65.00
Seal I.D.	294.00

305.00

Part No	SV5 3050 3100 650
Shaft Dia.	"ØA" Min. 305.00 / "ØA" Max. 310.00
Seal Width	L 65.00
Seal I.D.	299.00

310.50

Part No	SV5 3105 3150 650
Shaft Dia.	"ØA" Min. 310.50 / "ØA" Max. 315.00
Seal Width	L 65.00
Seal I.D.	304.00

315.00

Part No	SV5 3150 3200 650
Shaft Dia.	"ØA" Min. 315.00 / "ØA" Max. 320.00
Seal Width	L 65.00
Seal I.D.	309.00

320.00

Part No	SV5 3200 3250 650
Shaft Dia.	"ØA" Min. 320.00 / "ØA" Max. 325.00
Seal Width	L 65.00
Seal I.D.	314.00

325.00

Part No	SV5 3250 3300 650
Shaft Dia.	"ØA" Min. 325.00 / "ØA" Max. 330.00
Seal Width	L 65.00
Seal I.D.	39.00

330.00

Part No	SV5 3300 3350 650
Shaft Dia.	"ØA" Min. 330.00 / "ØA" Max. 335.00
Seal Width	L 65.00
Seal I.D.	323.00

335.00

Part No	SV5 3350 3400 650
Shaft Dia.	"ØA" Min. 335.00 / "ØA" Max. 340.00
Seal Width	L 65.00
Seal I.D.	328.00

340.00

Part No	SV5 3400 3450 650
Shaft Dia.	"ØA" Min. 340.00 / "ØA" Max. 345.00
Seal Width	L 65.00
Seal I.D.	333.00

345.00

Part No	SV5 3450 3500 650
Shaft Dia.	"ØA" Min. 345.00 / "ØA" Max. 350.00
Seal Width	L 65.00
Seal I.D.	338.00

350.00

Part No	SV5 3500 3550 650
Shaft Dia.	"ØA" Min. 350.00 / "ØA" Max. 355.00
Seal Width	L 65.00
Seal I.D.	343.00

355.00

Part No	SV5 3550 3600 650
Shaft Dia.	"ØA" Min. 355.00 / "ØA" Max. 360.00
Seal Width	L 65.00
Seal I.D.	347.00

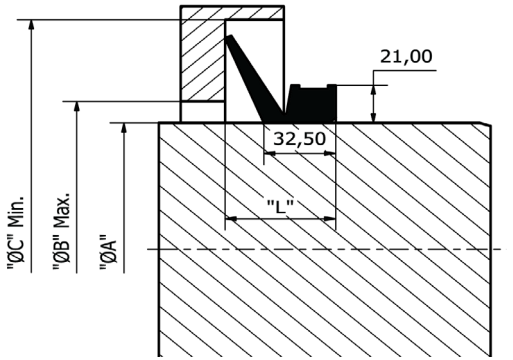

360.00

Part No	SV5 3600 3650 650
Shaft Dia.	"ØA" Min. 360.00 / "ØA" Max. 365.00
Seal Width	L 65.00
Seal I.D.	352.00

365.00

Part No	SV5 3650 3700 650
Shaft Dia.	"ØA" Min. 365.00 / "ØA" Max. 370.00
Seal Width	L 65.00
Seal I.D.	357.00

370.00

Part No	SV5 3700 3750 650
Shaft Dia.	"ØA" Min. 370.00 / "ØA" Max. 375.00
Seal Width	L 65.00
Seal I.D.	362.00

375.00

Part No	SV5 3750 3800 650
Shaft Dia.	"ØA" Min. 375.00 / "ØA" Max. 380.00
Seal Width	L 65.00
Seal I.D.	367.00

380.00

Part No	SV5 3800 3850 650
Shaft Dia.	"ØA" Min. 380.00 / "ØA" Max. 385.00
Seal Width	L 65.00
Seal I.D.	371.00

385.00

Part No	SV5 3850 3900 650
Shaft Dia.	"ØA" Min. 385.00 / "ØA" Max. 390.00
Seal Width	L 65.00
Seal I.D.	376.00

390.00

Part No	SV5 3900 3950 650
Shaft Dia.	"ØA" Min. 390.00 / "ØA" Max. 395.00
Seal Width	L 65.00
Seal I.D.	381.00

395.00

Part No	SV5 3950 4000 650
Shaft Dia.	"ØA" Min. 395.00 / "ØA" Max. 400.00
Seal Width	L 65.00
Seal I.D.	386.00

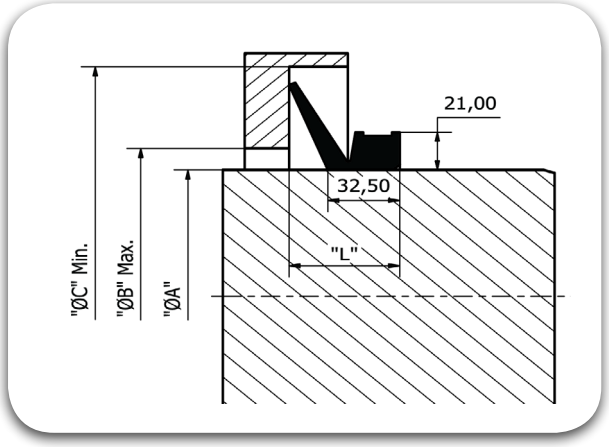

400.00

Part No	SV5 4000 4050 650
Shaft Dia.	"ØA" Min. 400.00 / "ØA" Max. 405.00
Seal Width	L 65.00
Seal I.D.	391.00

405.00

Part No	SV5 4050 4100 650
Shaft Dia.	"ØA" Min. 405.00 / "ØA" Max. 410.00
Seal Width	L 65.00
Seal I.D.	396.00

410.00

Part No	SV5 4100 4150 650
Shaft Dia.	"ØA" Min. 410.00 / "ØA" Max. 415.00
Seal Width	L 65.00
Seal I.D.	401.00

415.00

Part No	SV5 4150 4200 650
Shaft Dia.	"ØA" Min. 415.00 / "ØA" Max. 420.00
Seal Width	L 65.00
Seal I.D.	405.00

420.00

Part No	SV5 4200 4250 650
Shaft Dia.	"ØA" Min. 420.00 / "ØA" Max. 425.00
Seal Width	L 65.00
Seal I.D.	410.00

425.00

Part No	SV5 4250 4300 650
Shaft Dia.	"ØA" Min. 425.00 / "ØA" Max. 430.00
Seal Width	L 65.00
Seal I.D.	415.00

430.00

Part No	SV5 4300 4350 650
Shaft Dia.	"ØA" Min. 430.00 / "ØA" Max. 435.00
Seal Width	L 65.00
Seal I.D.	420.00

435.00

Part No	SV5 4350 4400 650
Shaft Dia.	"ØA" Min. 435.00 / "ØA" Max. 440.00
Seal Width	L 65.00
Seal I.D.	425.00

440.00

Part No	SV5 4400 4450 650
Shaft Dia.	"ØA" Min. 440.00 / "ØA" Max. 445.00
Seal Width	L 65.00
Seal I.D.	429.00

445.00

Part No	SV5 4450 4500 650
Shaft Dia.	"ØA" Min. 445.00 / "ØA" Max. 450.00
Seal Width	L 65.00
Seal I.D.	434.00

450.00

Part No	SV5 4500 4550 650
Shaft Dia.	"ØA" Min. 450.00 / "ØA" Max. 455.00
Seal Width	L 65.00
Seal I.D.	439.00

455.00

Part No	SV5 4550 4600 650
Shaft Dia.	"ØA" Min. 455.00 / "ØA" Max. 460.00
Seal Width	L 65.00
Seal I.D.	444.00

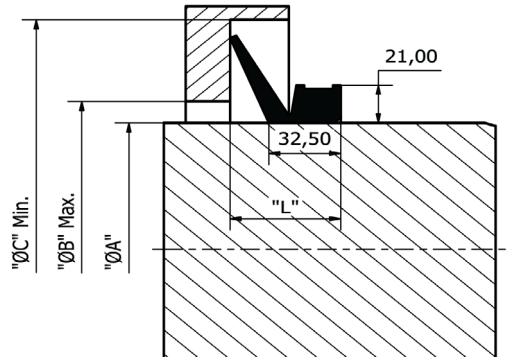

460.00

Part No	SV5 4600 4650 650
Shaft Dia.	"ØA" Min. 460.00 / "ØA" Max. 465.00
Seal Width	L 65.00
Seal I.D.	448.00

465.00

Part No	SV5 4650 4700 650
Shaft Dia.	"ØA" Min. 465.00 / "ØA" Max. 470.00
Seal Width	L 65.00
Seal I.D.	453.00

470.00

Part No	SV5 4700 4750 650
Shaft Dia.	"ØA" Min. 470.00 / "ØA" Max. 475.00
Seal Width	L 65.00
Seal I.D.	458.00

475.00

Part No	SV5 4750 4800 650
Shaft Dia.	"ØA" Min. 475.00 / "ØA" Max. 480.00
Seal Width	L 65.00
Seal I.D.	463.00

480.00

Part No	SV5 4800 4850 650
Shaft Dia.	"ØA" Min. 480.00 / "ØA" Max. 485.00
Seal Width	L 65.00
Seal I.D.	468.00

485.00

Part No	SV5 4850 4900 650
Shaft Dia.	"ØA" Min. 485.00 / "ØA" Max. 490.00
Seal Width	L 65.00
Seal I.D.	473.00

490.00

Part No	SV5 4900 4950 650
Shaft Dia.	"ØA" Min. 490.00 / "ØA" Max. 495.00
Seal Width	L 65.00
Seal I.D.	478.00

495.00

Part No	SV5 4950 5000 650
Shaft Dia.	"ØA" Min. 495.00 / "ØA" Max. 500.00
Seal Width	L 65.00
Seal I.D.	483.00

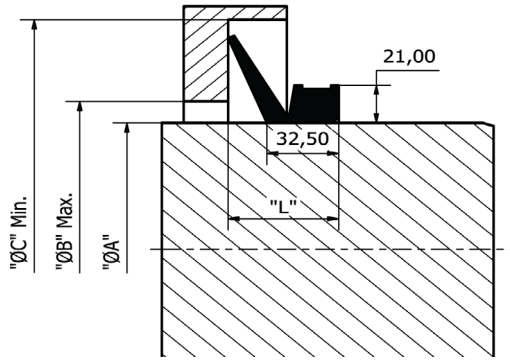

500.00

Part No	SV5 5000 5050 650
Shaft Dia.	"ØA" Min. 500.00 / "ØA" Max. 505.00
Seal Width	L 65.00
Seal I.D.	488.00

505.00

Part No	SV5 5050 5100 650
Shaft Dia.	"ØA" Min. 505.00 / "ØA" Max. 510.00
Seal Width	L 65.00
Seal I.D.	493.00

510.00

Part No	SV5 5100 5150 650
Shaft Dia.	"ØA" Min. 510.00 / "ØA" Max. 515.00
Seal Width	L 65.00
Seal I.D.	497.00

515.00

Part No	SV5 5150 5200 650
Shaft Dia.	"ØA" Min. 515.00 / "ØA" Max. 520.00
Seal Width	L 65.00
Seal I.D.	502.00

520.00

Part No	SV5 5200 5250 650
Shaft Dia.	"ØA" Min. 520.00 / "ØA" Max. 525.00
Seal Width	L 65.00
Seal I.D.	507.00

525.00

Part No	SV5 5250 5300 650
Shaft Dia.	"ØA" Min. 525.00 / "ØA" Max. 530.00
Seal Width	L 65.00
Seal I.D.	512.00

530.00

Part No	SV5 5300 5350 650
Shaft Dia.	"ØA" Min. 530.00 / "ØA" Max. 535.00
Seal Width	L 65.00
Seal I.D.	517.00

535.00

Part No	SV5 5350 5400 650
Shaft Dia.	"ØA" Min. 535.00 / "ØA" Max. 540.00
Seal Width	L 65.00
Seal I.D.	521.00

540.00

Part No	SV5 5400 5450 650
Shaft Dia.	"ØA" Min. 540.00 / "ØA" Max. 545.00
Seal Width	L 65.00
Seal I.D.	526.00

545.00

Part No	SV5 5450 5550 650
Shaft Dia.	"ØA" Min. 545.00 / "ØA" Max. 555.00
Seal Width	L 65.00
Seal I.D.	531.00

550.00

Part No	SV5 5500 5550 650
Shaft Dia.	"ØA" Min. 550.00 / "ØA" Max. 555.00
Seal Width	L 65.00
Seal I.D.	536.00

555.00

Part No	SV5 5550 5600 650
Shaft Dia.	"ØA" Min. 555.00 / "ØA" Max. 560.00
Seal Width	L 65.00
Seal I.D.	541.00

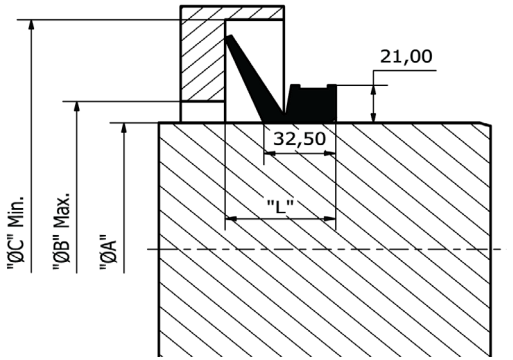

560.00

Part No	SV5 5600 5650 650
Shaft Dia.	"ØA" Min. 560.00 / "ØA" Max. 565.00
Seal Width	L 65.00
Seal I.D.	546.00

565.00

Part No	SV5 5650 5700 650
Shaft Dia.	"ØA" Min. 565.00 / "ØA" Max. 570.00
Seal Width	L 65.00
Seal I.D.	550.00

570.00

Part No	SV5 5700 5750 650
Shaft Dia.	"ØA" Min. 570.00 / "ØA" Max. 575.00
Seal Width	L 65.00
Seal I.D.	555.00

575.00

Part No	SV5 5750 5800 650
Shaft Dia.	"ØA" Min. 575.00 / "ØA" Max. 580.00
Seal Width	L 65.00
Seal I.D.	560.00

580.00

Part No	SV5 5800 5850 650
Shaft Dia.	"ØA" Min. 580.00 / "ØA" Max. 585.00
Seal Width	L 65.00
Seal I.D.	565.00

585.00

Part No	SV5 5850 5900 650
Shaft Dia.	"ØA" Min. 585.00 / "ØA" Max. 590.00
Seal Width	L 65.00
Seal I.D.	570.00

590.00

Part No	SV5 5900 6000 650
Shaft Dia.	"ØA" Min. 590.00 / "ØA" Max. 600.00
Seal Width	L 65.00
Seal I.D.	575.00

600.00

Part No	SV5 6000 6100 650
Shaft Dia.	"ØA" Min. 600.00 / "ØA" Max. 610.00
Seal Width	L 65.00
Seal I.D.	582.00

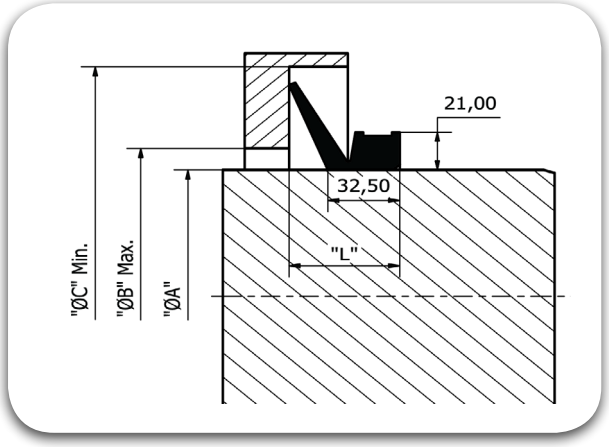

610.00

Part No	SV5 6100 6200 650
Shaft Dia.	"ØA" Min. 610.00 / "ØA" Max. 620.00
Seal Width	L 65.00
Seal I.D.	592.00

620.00

Part No	SV5 6200 6300 650
Shaft Dia.	"ØA" Min. 620.00 / "ØA" Max. 630.00
Seal Width	L 65.00
Seal I.D.	602.00

630.00

Part No	SV5 6300 6400 650
Shaft Dia.	"ØA" Min. 630.00 / "ØA" Max. 640.00
Seal Width	L 65.00
Seal I.D.	612.00

640.00

Part No	SV5 6400 6500 650
Shaft Dia.	"ØA" Min. 640.00 / "ØA" Max. 650.00
Seal Width	L 65.00
Seal I.D.	621.00

650.00

Part No	SV5 6500 6600 650
Shaft Dia.	"ØA" Min. 650.00 / "ØA" Max. 660.00
Seal Width	L 65.00
Seal I.D.	631.00

660.00

Part No	SV5 6600 6700 650
Shaft Dia.	"ØA" Min. 660.00 / "ØA" Max. 670.00
Seal Width	L 65.00
Seal I.D.	640.00

670.00

Part No	SV5 6700 6800 650
Shaft Dia.	"ØA" Min. 670.00 / "ØA" Max. 680.00
Seal Width	L 65.00
Seal I.D.	650.00

680.00

Part No	SV5 6800 6900 650
Shaft Dia.	"ØA" Min. 680.00 / "ØA" Max. 690.00
Seal Width	L 65.00
Seal I.D.	660.00

690.00

Part No	SV5 6900 7000 650
Shaft Dia.	"ØA" Min. 690.00 / "ØA" Max. 700.00
Seal Width	L 65.00
Seal I.D.	670.00

700.00

Part No	SV5 7000 7100 650
Shaft Dia.	"ØA" Min. 700.00 / "ØA" Max. 710.00
Seal Width	L 65.00
Seal I.D.	680.00

710.00

Part No	SV5 7100 7200 650
Shaft Dia.	"ØA" Min. 710.00 / "ØA" Max. 720.00
Seal Width	L 65.00
Seal I.D.	689.00

720.00

Part No	SV5 7200 7300 650
Shaft Dia.	"ØA" Min. 720.00 / "ØA" Max. 730.00
Seal Width	L 65.00
Seal I.D.	699.00

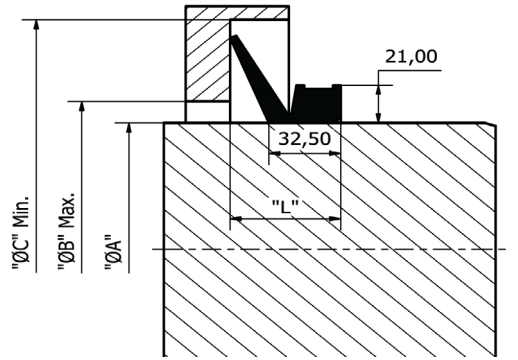

730.00

Part No	SV5 7300 7400 650
Shaft Dia.	"ØA" Min. 730.00 / "ØA" Max. 740.00
Seal Width	L 65.00
Seal I.D.	709.00

740.00

Part No	SV5 7400 7500 650
Shaft Dia.	"ØA" Min. 740.00 / "ØA" Max. 750.00
Seal Width	L 65.00
Seal I.D.	718.00

750.00

Part No	SV5 7500 7580 650
Shaft Dia.	"ØA" Min. 750.00 / "ØA" Max. 758.00
Seal Width	L 65.00
Seal I.D.	728.00

758.00

Part No	SV5 7580 7660 650
Shaft Dia.	"ØA" Min. 758.00 / "ØA" Max. 766.00
Seal Width	L 65.00
Seal I.D.	735.00

766.00

Part No	SV5 7660 7740 650
Shaft Dia.	"ØA" Min. 766.00 / "ØA" Max. 774.00
Seal Width	L 65.00
Seal I.D.	743.00

774.00

Part No	SV5 7740 7830 650
Shaft Dia.	"ØA" Min. 774.00 / "ØA" Max. 783.00
Seal Width	L 65.00
Seal I.D.	751.00

783.00

Part No	SV5 7830 7920 650
Shaft Dia.	"ØA" Min. 783.00 / "ØA" Max. 792.00
Seal Width	L 65.00
Seal I.D.	759.00

792.00

Part No	SV5 7920 8010 650
Shaft Dia.	"ØA" Min. 792.00 / "ØA" Max. 801.00
Seal Width	L 65.00
Seal I.D.	768.00

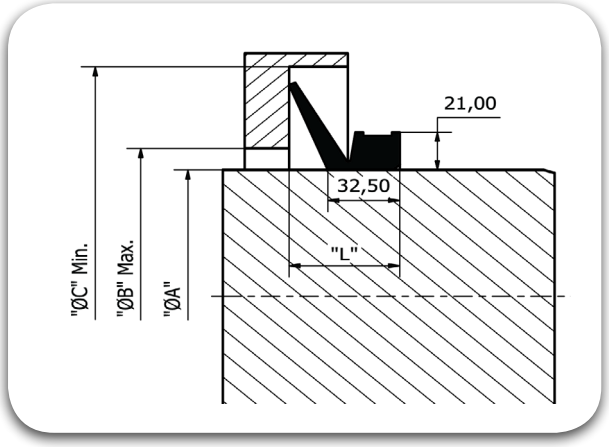

801.00

Part No	SV5 8010 8100 650
Shaft Dia.	"ØA" Min. 801.00 / "ØA" Max. 810.00
Seal Width	L 65.00
Seal I.D.	777.00

810.00

Part No	SV5 8100 8210 650
Shaft Dia.	"ØA" Min. 810.00 / "ØA" Max. 821.00
Seal Width	L 65.00
Seal I.D.	786.00

821.00

Part No	SV5 8210 8310 650
Shaft Dia.	"ØA" Min. 821.00 / "ØA" Max. 831.00
Seal Width	L 65.00
Seal I.D.	796.00

831.00

Part No	SV5 8310 8410 650
Shaft Dia.	"ØA" Min. 831.00 / "ØA" Max. 841.00
Seal Width	L 65.00
Seal I.D.	805.00

841.00

Part No	SV5 8410 8510 650
Shaft Dia.	"ØA" Min. 841.00 / "ØA" Max. 851.00
Seal Width	L 65.00
Seal I.D.	814.00

851.00

Part No	SV5 8510 8610 650
Shaft Dia.	"ØA" Min. 851.00 / "ØA" Max. 861.00
Seal Width	L 65.00
Seal I.D.	824.00

861.00

Part No	SV5 8610 8710 650
Shaft Dia.	"ØA" Min. 861.00 / "ØA" Max. 871.00
Seal Width	L 65.00
Seal I.D.	833.00

871.00

Part No	SV5 8710 8820 650
Shaft Dia.	"ØA" Min. 871.00 / "ØA" Max. 882.00
Seal Width	L 65.00
Seal I.D.	843.00

882.00

Part No	SV5 8820 8920 650
Shaft Dia.	"ØA" Min. 882.00 / "ØA" Max. 892.00
Seal Width	L 65.00
Seal I.D.	853.00

892.00

Part No	SV5 8920 9120 650
Shaft Dia.	"ØA" Min. 892.00 / "ØA" Max. 912.00
Seal Width	L 65.00
Seal I.D.	871.00

912.00

Part No	SV5 9120 9220 650
Shaft Dia.	"ØA" Min. 912.00 — "ØA" Max. 922.00
Seal Width	L 65.00
Seal I.D.	880.00

922.00

Part No	SV5 9220 9330 650
Shaft Dia.	"ØA" Min. 922.00 — "ØA" Max. 933.00
Seal Width	L 65.00
Seal I.D.	890.00

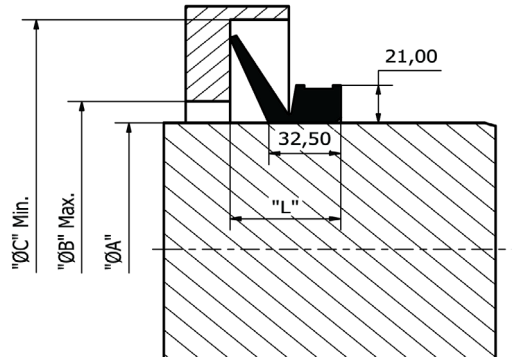

933.00

Part No	SV5 9330 9440 650
Shaft Dia.	"ØA" Min. 933.00 — "ØA" Max. 944.00
Seal Width	L 65.00
Seal I.D.	900.00

944.00

Part No	SV5 9440 9550 650
Shaft Dia.	"ØA" Min. 944.00 — "ØA" Max. 955.00
Seal Width	L 65.00
Seal I.D.	911.00

955.00

Part No	SV5 9550 9660 650
Shaft Dia.	"ØA" Min. 955.00 — "ØA" Max. 966.00
Seal Width	L 65.00
Seal I.D.	921.00

966.00

Part No	SV5 9660 9770 650
Shaft Dia.	"ØA" Min. 966.00 — "ØA" Max. 977.00
Seal Width	L 65.00
Seal I.D.	932.00

977.00

Part No	SV5 9770 9880 650
Shaft Dia.	"ØA" Min. 977.00 — "ØA" Max. 988.00
Seal Width	L 65.00
Seal I.D.	942.00

988.00

Part No	SV5 9880 9990 650
Shaft Dia.	"ØA" Min. 988.00 — "ØA" Max. 999.00
Seal Width	L 65.00
Seal I.D.	953.00

999.00

Part No	SV5 9990 1010 650
Shaft Dia.	"ØA" Min. 999.00 — "ØA" Max. 1010.00
Seal Width	L 65.00
Seal I.D.	963.00

1010.00

Part No	SV5X 1010 1025 065
Shaft Dia.	"ØA" Min. 1010.00 — "ØA" Max. 1025.00
Seal Width	L 65.00
Seal I.D.	973.00

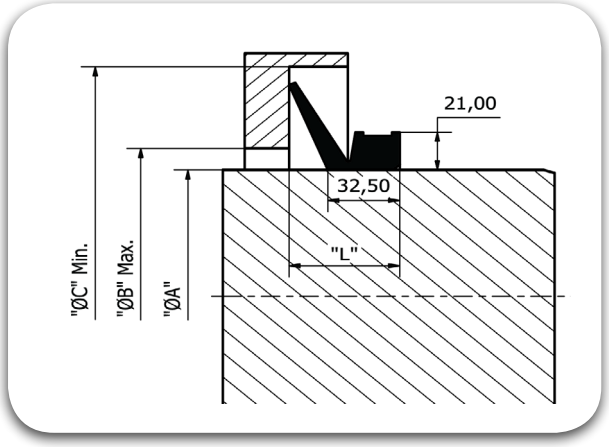

1025.00

Part No	SV5X 1025 1045 065
Shaft Dia.	"ØA" Min. 1025.00 / "ØA" Max. 1045.00
Seal Width	L 65.00
Seal I.D.	990.00

1045.00

Part No	SV5X 1045 1065 065
Shaft Dia.	"ØA" Min. 1045.00 / "ØA" Max. 1065.00
Seal Width	L 65.00
Seal I.D.	1008.00

1065.00

Part No	SV5X 1065 1085 065
Shaft Dia.	"ØA" Min. 1065.00 / "ØA" Max. 1085.00
Seal Width	L 65.00
Seal I.D.	1027.00

1085.00

Part No	SV5X 1085 1105 065
Shaft Dia.	"ØA" Min. 1085.00 / "ØA" Max. 1105.00
Seal Width	L 65.00
Seal I.D.	1045.00

1105.00

Part No	SV5X 1105 1125 065
Shaft Dia.	"ØA" Min. 1105.00 / "ØA" Max. 1125.00
Seal Width	L 65.00
Seal I.D.	1065.00

1125.00

Part No	SV5X 1125 1145 065
Shaft Dia.	"ØA" Min. 1125.00 / "ØA" Max. 1145.00
Seal Width	L 65.00
Seal I.D.	1084.00

1145.00

Part No	SV5X 1145 1165 065
Shaft Dia.	"ØA" Min. 1145.00 / "ØA" Max. 1165.00
Seal Width	L 65.00
Seal I.D.	1103.00

1165.00

Part No	SV5X 1165 1185 065
Shaft Dia.	"ØA" Min. 1165.00 / "ØA" Max. 1185.00
Seal Width	L 65.00
Seal I.D.	1121.00

1185.00

Part No	SV5X 1185 1205 065
Shaft Dia.	"ØA" Min. 1185.00 / "ØA" Max. 1205.00
Seal Width	L 65.00
Seal I.D.	1139.00

1205.00

Part No	SV5X 1205 1225 065
Shaft Dia.	"ØA" Min. 1205.00 / "ØA" Max. 1225.00
Seal Width	L 65.00
Seal I.D.	1157.00

1225.00

Part No	SV5X 1225 1245 065
Shaft Dia.	"ØA" Min. 1225.00 / "ØA" Max. 1245.00
Seal Width	L 65.00
Seal I.D.	1176.00

1245.00

Part No	SV5X 1245 1270 065
Shaft Dia.	"ØA" Min. 1245.00 / "ØA" Max. 1270.00
Seal Width	L 65.00
Seal I.D.	1195.00

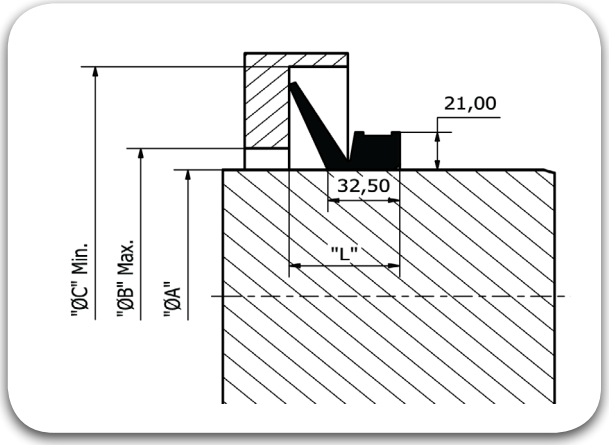

1270.00

Part No	SV5X 1270 1295 065
Shaft Dia.	"ØA" Min. 1270.00 / "ØA" Max. 1295.00
Seal Width	L 65.00
Seal I.D.	1218.00

1295.00

Part No	SV5X 1295 1315 065
Shaft Dia.	"ØA" Min. 1295.00 / "ØA" Max. 1315.00
Seal Width	L 65.00
Seal I.D.	1240.00

1315.00

Part No	SV5X 1315 1340 065
Shaft Dia.	"ØA" Min. 1315.00 / "ØA" Max. 1340.00
Seal Width	L 65.00
Seal I.D.	1259.00

1340.00

Part No	SV5X 1340 1365 065
Shaft Dia.	"ØA" Min. 1340.00 / "ØA" Max. 1365.00
Seal Width	L 65.00
Seal I.D.	1281.00

1365.00

Part No	SV5X 1365 1390 065
Shaft Dia.	"ØA" Min. 1365.00 / "ØA" Max. 1390.00
Seal Width	L 65.00
Seal I.D.	135.00

1390.00

Part No	SV5X 1390 1415 065
Shaft Dia.	"ØA" Min. 1390.00 / "ØA" Max. 1415.00
Seal Width	L 65.00
Seal I.D.	1328.00

1415.00

Part No	SV5X 1415 1440 065
Shaft Dia.	"ØA" Min. 1415.00 / "ØA" Max. 1440.00
Seal Width	L 65.00
Seal I.D.	1350.00

1440.00

Part No	SV5X 1440 1465 065
Shaft Dia.	"ØA" Min. 1440.00 / "ØA" Max. 1465.00
Seal Width	L 65.00
Seal I.D.	1374.00

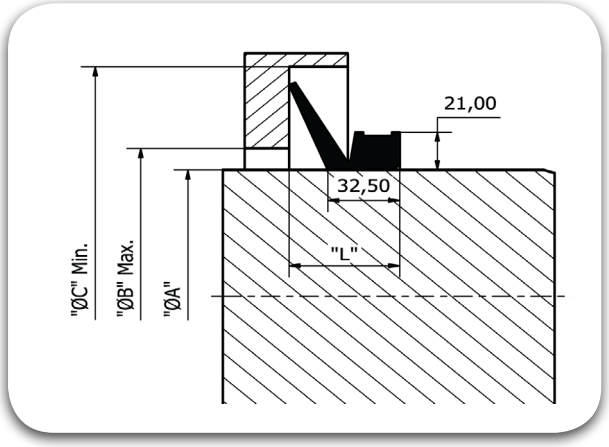

1465.00

Part No	SV5X 1465 1490 065
Shaft Dia.	"ØA" Min. 1465.00 / "ØA" Max. 1490.00
Seal Width	L 65.00
Seal I.D.	1397.00

1490.00

Part No	SV5X 1490 1515 065
Shaft Dia.	"ØA" Min. 1490.00 / "ØA" Max. 1515.00
Seal Width	L 65.00
Seal I.D.	1419.00

1515.00

Part No	SV5X 1515 1540 065
Shaft Dia.	"ØA" Min. 1515.00 / "ØA" Max. 1540.00
Seal Width	L 65.00
Seal I.D.	1443.00

1540.00

Part No	SV5X 1540 1570 065
Shaft Dia.	"ØA" Min. 1540.00 / "ØA" Max. 1570.00
Seal Width	L 65.00
Seal I.D.	1467.00

1570.00

Part No	SV5X 1570 1600 065
Shaft Dia.	"ØA" Min. 1570.00 / "ØA" Max. 1600.00
Seal Width	L 65.00
Seal I.D.	1495.00

1600.00

Part No	SV5X 1600 1640 065
Shaft Dia.	"ØA" Min. 1600.00 / "ØA" Max. 1640.00
Seal Width	L 65.00
Seal I.D.	1524.00

1640.00

Part No	SV5X 1640 1680 065
Shaft Dia.	"ØA" Min. 1640.00 / "ØA" Max. 1680.00
Seal Width	L 65.00
Seal I.D.	1559.00

1680.00

Part No	SV5X 1680 1720 065
Shaft Dia.	"ØA" Min. 1680.00 / "ØA" Max. 1720.00
Seal Width	L 65.00
Seal I.D.	1596.00

1720.00

Part No	SV5X 1720 1765 065
Shaft Dia.	"ØA" Min. 1720.00 / "ØA" Max. 1765.00
Seal Width	L 65.00
Seal I.D.	1632.00

1765.00

Part No	SV5X 1765 1810 065
Shaft Dia.	"ØA" Min. 1765.00 / "ØA" Max. 1810.00
Seal Width	L 65.00
Seal I.D.	1671.00

1810.00

Part No	SV5X 1810 1855 065
Shaft Dia.	"ØA" Min. 1810.00 / "ØA" Max. 1855.00
Seal Width	L 65.00
Seal I.D.	1714.00

1855.00

Part No	SV5X 1855 1905 065
Shaft Dia.	"ØA" Min. 1855.00 / "ØA" Max. 1905.00
Seal Width	L 65.00
Seal I.D.	1753.00

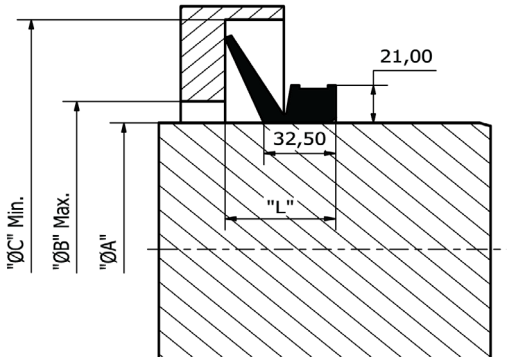

1905.00

Part No	SV5X 1905 1955 065
Shaft Dia.	"ØA" Min. 1905.00 / "ØA" Max. 1955.00
Seal Width	L 65.00
Seal I.D.	1794.00

1955.00

Part No	SV5X 1955 2010 065
Shaft Dia.	"ØA" Min. 1955.00 / "ØA" Max. 2010.00
Seal Width	L 65.00
Seal I.D.	1844.00

Rotary Seals

SV6

TRIADA
TECHNOLOGIES

#SealingExcellence

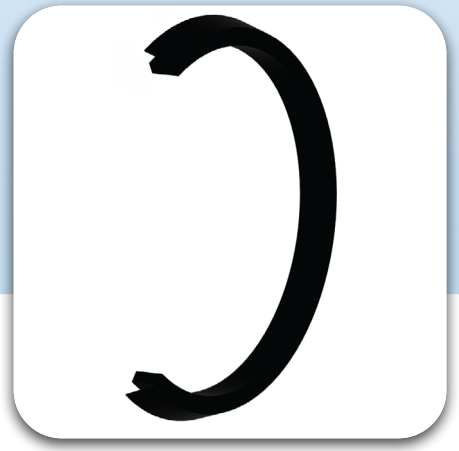
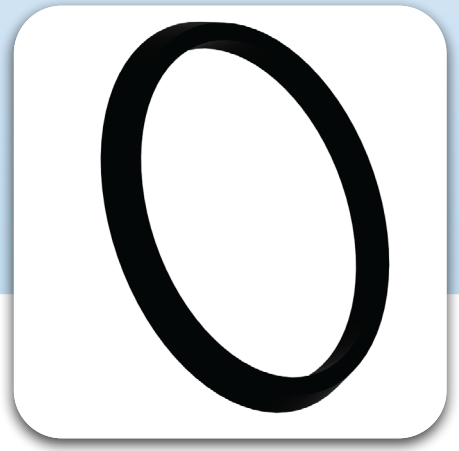
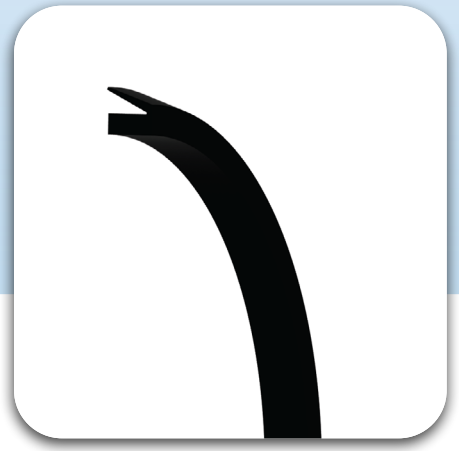
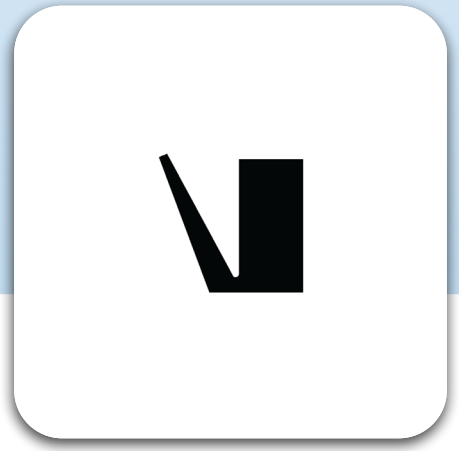

Description

The V-Ring is an all elastomer axial seal for rotary shafts and bearings. It rotates with the shaft and seals axially against a stationary counter face perpendicular to the shaft. This type of seal has been used widely for several applications and has proved to be reliable and effective against dust, dirt, water and oil splash and other media.
The ring consists of three parts:
a) The seal body, installed with interference to the shaft.
b) The hinge, acting as a spring connection between the body and the lip.
c) The conical and flexible sealing lip which provides the actual dynamic sealing against the counter face. The counter face can be the side wall of the bearing, a washer or any housing.

Diameter Range	Ø200.00 – Ø2020.00 (Larger dia. on request)
Standard material	TRIAFLEX® NBR 60 Shores (Other Compounds available, so as to suit the Application Conditions).
Temperature(°C)	-40ºC to 200ºC (Based on Elastomer Material).
Speed	Upto 15 m/s depending on the type of elastomer with the standard TRIAFLEX® T576 (NBR 75 Shores) it Can go upto 10 m/s. When used with elastomer in TRIAFLEX® T676 (FKM 75 Shores) it can go upto 15 m/s.
Fluids	Oil & Grease.

Material Details

Seal Material	Seal Material Code
TRIAFLEX® NBR 60	T561
TRIAFLEX® HNBR 60	T531
TRIAFLEX® FKM 60	T661
TRIAFLEX® EPDM 60	T761

Nomenclature

Part No	SV6	303	313	31	T561
	Seal profile	Shaft Dia. Min.	Shaft Dia. Max.	Seal Width x 10	Seal Material Code

TYPE	"ØB" Max.	"ØC" Min.
SV6	ØA + 12	ØA + 50

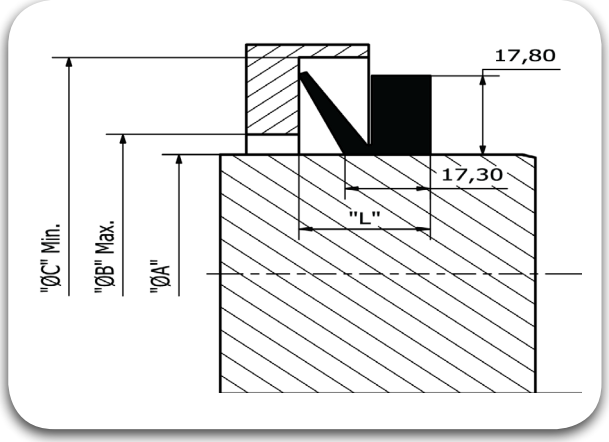

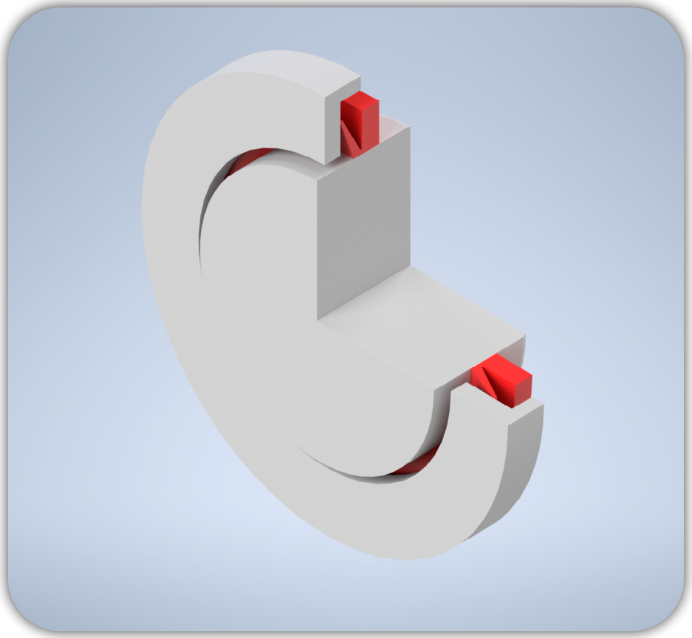

Rotary Seal

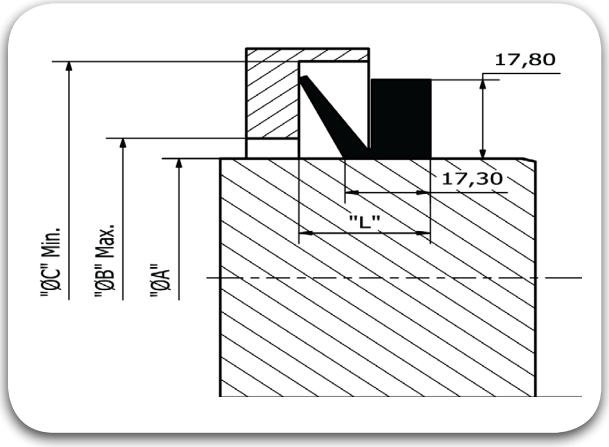

200.00

Part No	SV6 2000 2050 310	
Shaft Dia.	"ØA" Min. 200.00	"ØA" Max. 205.00
Seal Width	L 31.00	
Seal I.D.	192.00	

205.00

Part No	SV6 2050 2100 310	
Shaft Dia.	"ØA" Min. 205.00	"ØA" Max. 210.00
Seal Width	L 31.00	
Seal I.D.	196.00	

210.00

Part No	SV6 2100 2150 310	
Shaft Dia.	"ØA" Min. 210.00	"ØA" Max. 215.00
Seal Width	L 31.00	
Seal I.D.	200.00	

215.00

Part No	SV6 2150 2190 310	
Shaft Dia.	"ØA" Min. 215.00	"ØA" Max. 219.00
Seal Width	L 31.00	
Seal I.D.	204.00	

219.00

Part No	SV6 2190 2240 310	
Shaft Dia.	"ØA" Min. 219.00	"ØA" Max. 224.00
Seal Width	L 31.00	
Seal I.D.	207.00	

224.00

Part No	SV6 2240 2280 310	
Shaft Dia.	"ØA" Min. 224.00	"ØA" Max. 228.00
Seal Width	L 31.00	
Seal I.D.	211.00	

228.00

Part No	SV6 2280 2320 310	
Shaft Dia.	"ØA" Min. 228.00	"ØA" Max. 232.00
Seal Width	L 31.00	
Seal I.D.	215.00	

232.00

Part No	SV6 2320 2360 310	
Shaft Dia.	"ØA" Min. 232.00	"ØA" Max. 236.00
Seal Width	L 31.00	
Seal I.D.	219.00	

236.00

Part No	SV6 2360 2400 310	
Shaft Dia.	"ØA" Min. 236.00	"ØA" Max. 240.00
Seal Width	L 31.00	
Seal I.D.	223.00	

240.00

Part No	SV6 2400 2500 310	
Shaft Dia.	"ØA" Min. 240.00	"ØA" Max. 250.00
Seal Width	L 31.00	
Seal I.D.	227.00	

250.00

Part No	SV6 2500 2600 310
Shaft Dia.	"ØA" Min. 250.00 / "ØA" Max. 260.00
Seal Width	L 31.00
Seal I.D.	236.00

260.00

Part No	SV6 2600 2700 245
Shaft Dia.	"ØA" Min. 260.00 / "ØA" Max. 270.00
Seal Width	L 31.00
Seal I.D.	245.00

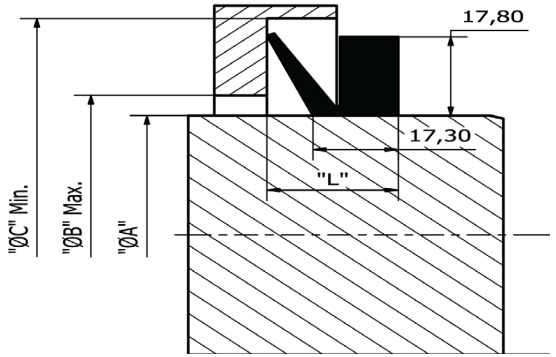

270.00

Part No	SV6 2700 2810 310
Shaft Dia.	"ØA" Min. 270.00 / "ØA" Max. 281.00
Seal Width	L 31.00
Seal I.D.	255.00

281.00

Part No	SV6 2810 2920 310
Shaft Dia.	"ØA" Min. 281.00 / "ØA" Max. 292.00
Seal Width	L 31.00
Seal I.D.	265.00

292.00

Part No	SV6 2920 3030 310
Shaft Dia.	"ØA" Min. 292.00 / "ØA" Max. 303.00
Seal Width	L 31.00
Seal I.D.	275.00

303.00

Part No	SV6 3030 3130 310
Shaft Dia.	"ØA" Min. 303.00 / "ØA" Max. 313.00
Seal Width	L 31.00
Seal I.D.	285.00

313.00

Part No	SV6 3130 3250 310
Shaft Dia.	"ØA" Min. 313.00 / "ØA" Max. 325.00
Seal Width	L 31.00
Seal I.D.	295.00

325.00

Part No	SV6 3250 3350 310
Shaft Dia.	"ØA" Min. 325.00 / "ØA" Max. 335.00
Seal Width	L 31.00
Seal I.D.	305.00

335.00

Part No	SV6 3350 3450 310
Shaft Dia.	"ØA" Min. 335.00 / "ØA" Max. 345.00
Seal Width	L 31.00
Seal I.D.	315.00

345.00

Part No	SV6 3450 3550 310
Shaft Dia.	"ØA" Min. 345.00 / "ØA" Max. 355.00
Seal Width	L 31.00
Seal I.D.	322.00

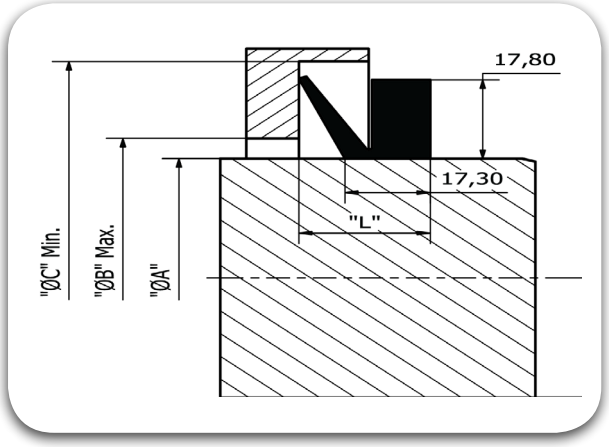

355.00

Part No	SV6 3550 3720 310
Shaft Dia.	"ØA" Min. 355.00 / "ØA" Max. 372.00
Seal Width	L 31.00
Seal I.D.	328.00

372.00

Part No	SV6 3720 3900 310
Shaft Dia.	"ØA" Min. 372.00 / "ØA" Max. 390.00
Seal Width	L 31.00
Seal I.D.	344.00

390.00

Part No	SV6 3900 4150 310
Shaft Dia.	"ØA" Min. 390.00 / "ØA" Max. 415.00
Seal Width	L 31.00
Seal I.D.	360.00

415.00

Part No	SV6 4150 4430 310
Shaft Dia.	"ØA" Min. 415.00 / "ØA" Max. 443.00
Seal Width	L 31.00
Seal I.D.	328.00

443.00

Part No	SV6 4430 4800 310
Shaft Dia.	"ØA" Min. 443.00 / "ØA" Max. 480.00
Seal Width	L 31.00
Seal I.D.	410.00

480.00

Part No	SV6 4800 5300 310
Shaft Dia.	"ØA" Min. 480.00 / "ØA" Max. 530.00
Seal Width	L 31.00
Seal I.D.	450.00

530.00

Part No	SV6 5300 5800 310
Shaft Dia.	"ØA" Min. 530.00 / "ØA" Max. 580.00
Seal Width	L 31.00
Seal I.D.	495.00

580.00

Part No	SV6 5800 6300 310
Shaft Dia.	"ØA" Min. 580.00 / "ØA" Max. 630.00
Seal Width	L 31.00
Seal I.D.	540.00

630.00

Part No	SV6 6300 6650 310
Shaft Dia.	"ØA" Min. 630.00 / "ØA" Max. 665.00
Seal Width	L 31.00
Seal I.D.	600.00

665.00

Part No	SV6 6650 7050 310
Shaft Dia.	"ØA" Min. 665.00 / "ØA" Max. 705.00
Seal Width	L 31.00
Seal I.D.	630.00

705.00

Part No	SV6 7050 7450 310
Shaft Dia.	"ØA" Min. 705.00 / "ØA" Max. 745.00
Seal Width	L 31.00
Seal I.D.	670.00

745.00

Part No	SV6 7450 7850 310
Shaft Dia.	"ØA" Min. 745.00 / "ØA" Max. 785.00
Seal Width	L 31.00
Seal I.D.	705.00

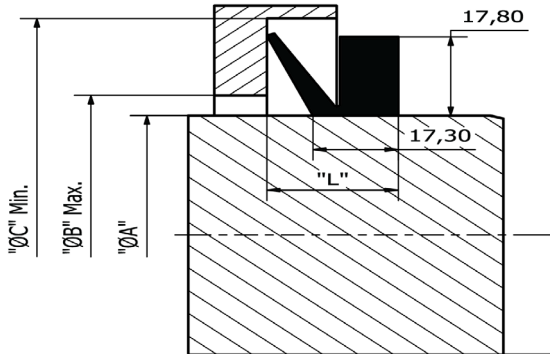

785.00

Part No	SV6 7850 830 310
Shaft Dia.	"ØA" Min. 785.00 / "ØA" Max. 830.00
Seal Width	L 31.00
Seal I.D.	745.00

830.00

Part No	SV6 8300 8750 310
Shaft Dia.	"ØA" Min. 830.00 / "ØA" Max. 875.00
Seal Width	L 31.00
Seal I.D.	785.00

875.00

Part No	SV6 8750 9200 310
Shaft Dia.	"ØA" Min. 875.00 / "ØA" Max. 920.00
Seal Width	L 31.00
Seal I.D.	825.00

920.00

Part No	SV6 9200 8650 310
Shaft Dia.	"ØA" Min. 920.00 / "ØA" Max. 965.00
Seal Width	L 31.00
Seal I.D.	865.00

965.00

Part No	SV6X 0965 1015 310
Shaft Dia.	"ØA" Min. 965.00 / "ØA" Max. 1015.00
Seal Width	L 31.00
Seal I.D.	910.00

1015.00

Part No	SV6X 1015 1065 310
Shaft Dia.	"ØA" Min. 1015.00 / "ØA" Max. 1065.00
Seal Width	L 31.00
Seal I.D.	955.00

1065.00

Part No	SV6X 1065 1115 310
Shaft Dia.	"ØA" Min. 1065.00 / "ØA" Max. 1115.00
Seal Width	L 31.00
Seal I.D.	1000.00

1115.00

Part No	SV6X 1115 1165 310
Shaft Dia.	"ØA" Min. 1115.00 / "ØA" Max. 1165.00
Seal Width	L 31.00
Seal I.D.	1045.00

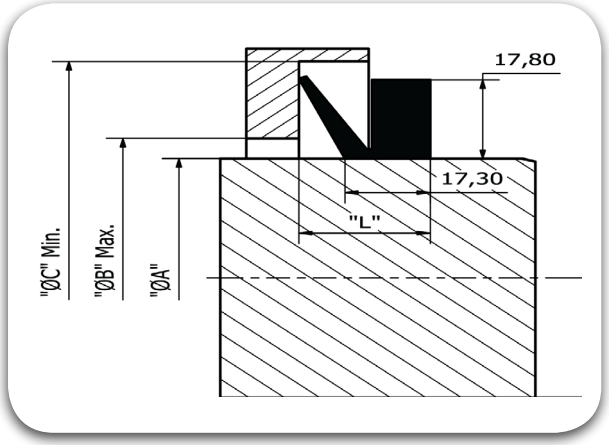

1165.00

Part No	SV6X 1165 1215 310
Shaft Dia.	"ØA" Min. 1165.00 / "ØA" Max. 1215.00
Seal Width	L 31.00
Seal I.D.	1090.00

1215.00

Part No	SV6X 1215 1270 310
Shaft Dia.	"ØA" Min. 1215.00 / "ØA" Max. 1270.00
Seal Width	L 31.00
Seal I.D.	1135.00

1270.00

Part No	SV6X 1270 1320 310
Shaft Dia.	"ØA" Min. 1270.00 / "ØA" Max. 1320.00
Seal Width	L 31.00
Seal I.D.	1180.00

1320.00

Part No	SV6X 1320 1370 310
Shaft Dia.	"ØA" Min. 1320.00 / "ØA" Max. 1370.00
Seal Width	L 31.00
Seal I.D.	1225.00

1370.00

Part No	SV6X 1370 1420 310
Shaft Dia.	"ØA" Min. 1370.00 / "ØA" Max. 1420.00
Seal Width	L 31.00
Seal I.D.	1270.00

1420.00

Part No	SV6X 1420 1470 310
Shaft Dia.	"ØA" Min. 1420.00 / "ØA" Max. 1470.00
Seal Width	L 31.00
Seal I.D.	1315.00

1470.00

Part No	SV6X 1470 1520 310
Shaft Dia.	"ØA" Min. 1470.00 / "ØA" Max. 1520.00
Seal Width	L 31.00
Seal I.D.	1360.00

1520.00

Part No	SV6X 1520 1570 310
Shaft Dia.	"ØA" Min. 1520.00 / "ØA" Max. 1570.00
Seal Width	L 31.00
Seal I.D.	1405.00

1570.00

Part No	SV6X 1570 1620 310
Shaft Dia.	"ØA" Min. 1570.00 / "ØA" Max. 1620.00
Seal Width	L 31.00
Seal I.D.	1450.00

1620.00

Part No	SV6X 1620 1670 310
Shaft Dia.	"ØA" Min. 1620.00 / "ØA" Max. 1670.00
Seal Width	L 31.00
Seal I.D.	1495.00

1670.00

Part No	SV6X 1670 1720 310	
Shaft Dia.	"ØA" Min. 1670.00	"ØA" Max. 1720.00
Seal Width	L 31.00	
Seal I.D.	1540.00	

1720.00

Part No	SV6X 1720 1770 310	
Shaft Dia.	"ØA" Min. 1720.00	"ØA" Max. 1770.00
Seal Width	L 31.00	
Seal I.D.	1585.00	

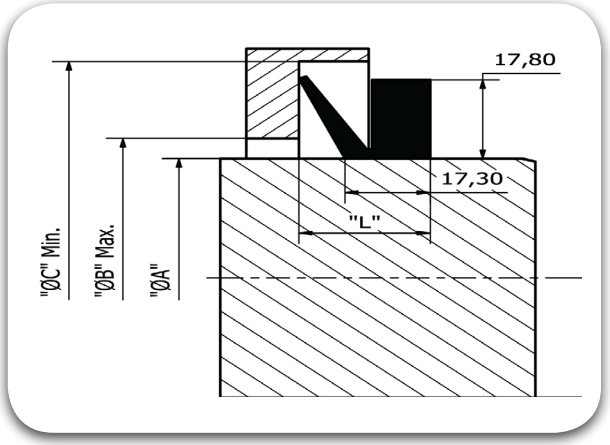

1770.00

Part No	SV6X 1770 1820 310	
Shaft Dia.	"ØA" Min. 1770.00	"ØA" Max. 1820.00
Seal Width	L 31.00	
Seal I.D.	1630.00	

1820.00

Part No	SV6X 1820 1870 310	
Shaft Dia.	"ØA" Min. 1820.00	"ØA" Max. 1870.00
Seal Width	L 31.00	
Seal I.D.	1675.00	

1870.00

Part No	SV6X 1870 1920 310	
Shaft Dia.	"ØA" Min. 1870.00	"ØA" Max. 1920.00
Seal Width	L 31.00	
Seal I.D.	1720.00	

1920.00

Part No	SV6X 1920 1970 310	
Shaft Dia.	"ØA" Min. 1920.00	"ØA" Max. 1970.00
Seal Width	L 31.00	
Seal I.D.	1765.00	

1970.00

Part No	SV6X 1970 2020 310	
Shaft Dia.	"ØA" Min. 1970.00	"ØA" Max. 2020.00
Seal Width	L 31.00	
Seal I.D.	1810.00	

Storage Guidelines

Storage life is the maximum period of time, clocked from the date of manufacture, that an elastomeric component, packed appropriately, may be stored under specific condition, beyond which it is regarded as unserviceable, for the intended purpose it was originally manufactured. The cure date shall be taken as the basis for the thermo-set elastomers and for thermoplastic elastomers, the date of manufacturing of the finished product shall be the basis. Shelf life or storage life shall be different for each compound, even when they are stored under specified conditions. Mostly, longer storage periods are considered for the 1O or 20-year categories of compounds, provided the components are appropriately stored and recommended periodic checks are performed. In general, Polyethylene (PE) bags (UV protected shall be an added advantage) stored in cardboard boxes or PE lined kraft paper bags can insure a decent storage life.

Over the years, the advancements are compounding techniques have helped in improving the storage life of relatively age-sensitive elastomers, even in normal ware housing atmosphere. It has been clearly demonstrated and evident that the storage conditions is the single most critical aspect in determining the useful life of elastomer products, than is the time.

Following parameters/criteria shall assist in ensuring a proper storage condition, which are extracted from ISO 2230:2002 and may be referred for all applications other than related to Aerospace/Military. For Aerospace/ Military, one may refer to SAE-ARP 5361 and MIL-HDBK-695C, for the storage conditions.

Temperature

Preferred storage temperature is below 25°C, away from direct sources of heat. As a thumb rule, it can be stated that a storage temperature 10°C higher than the specified 25°C, can reduce the storage life by at; out 50% and similarly, a storage temperature lower by 10°C from the suggested 25°C, can increase the storage life by about 100%!.In case the storage temperature has been lower than 15°C, there is a risk of distortion due to handling of possible stiffened products and in these cases, it is suggested to warm the products, may be to about 30°C or so.

Humidity

Relative humidity of the storage atmosphere should be less 70% in case of elastomers and less than 65%, in case of Polyurethanes. RH should be such that, given in the variations of storage temperatures, condensation should not occur.

Light

Elastomeric Seals should be protected from light sources, in particular direct sunlight or intense artificial light having an ultraviolet content. The individual storage bags offer the best protection as long as they are UV resistant. (Note: It is advisable that the windows of storage rooms where elastomers are stored in bulk be covered with a red or orange coating).

Radiation

Precautions shall be taken to protect stored articles from all sources of ionizing radiation likely to cause damage to stored articles.

Storage Guidelines

Ozone

As Ozone is particularly damaging to certain elastomeric seals, storage rooms shall not contain any equipment that is capable of generating ozone such as mercury vapor lamps, high voltage electrical equipment giving rise to electric sparks or silent electrical discharges.

Combustion gases and organic vapor shall be excluded from storage rooms as they may give rise to ozone via photochemical processes. bond to such an extent that the seal

Deformation

Elastomeric seals shall be stored free from superimposed tensile and compressive stresses or any other causes of deformation. Where articles are stored in strain-free condition, they shall be stored in their original packaging. O-Rings of large inside diameter shall be formed into at least three superimposed loops so as to avoid creasing or twisting. (Note: It is not possible to achieve this condition by forming just two loops, three are minimum required)

Contact with Liquid & Semi-Solid Materials

Certain Metals and their Alloys (in particular Copper. Manganese & Iron) are known to have deleterious effects on elastomers. Elastomeric Seals shall not be stored in contact with such metals (except when bonded to them), but shall be protected by individual packaging.

Contact with Dusting Powder

Dusting Powder shall be used only for packaging of elastomeric seals in order to prevent blocking or sticking. In such instances, the minimum quantity of powder to prevent adhesion shall be used.

Contact between different Elastomers

Contact between different elastomers and elastomers of different seals shall be avoided.

Elastomeric Seals bonded to Metal Parts

The metal parts of bonded seals shall not come in contact with the elastomeric element of another seal. Any presentative used on the metal shall be such that it will not affect the elastomeric element or the bond to such an extent that the seal will not comply with the product specification.

Stock Rotation

Elastomeric Seal stock shall be rotated in FIFO (First In First Out) method.

Storage Guidelines

Initial and Extension Storage Periods for Unassembled components following ISO 2230

Abbreviation	Chemical Name from ISO 1629	Common Name
GROUP A - Initial Storage Period 5 Years, Extension Storage Period 2 Years		
BR	Butadiene Rubber	Polybutadiene
NR	Isoprene Rubber, Natural	Natural Rubber
IR	Isoprene Rubber, Synthetic	Polyisoprene
SBR	Styrene-Butadiene Rubber	SBR
AU	Polyester Urethane Rubber	Polyurethane
EU	Polyether Urethane Rubber	Polyurethane
GROUP B - Initial Storage Period 7 Years, Extension Storage Period 3 Years		
NBR	Acrylonitrile-Butadiene Rubber	Nitrile
XNBR	Carboxylic-Acrylonitrile-Butadiene Rubber	Carboxylated Rubber
HNBR	Hydrogenated NBR (with some unsaturation)	Hydrogenated Nitrile
CO, ECO	Polychloromethyloxiran and Copolymer	Epichlorohydrin
ACM	Copolymer of Ethylacrylate and small amount of Monomer	Acrylic
CR	Chloroprene Rubber	Neoprene
IIR	Isobutene-Isoprene Rubber	Butyl
BIIR	Bromo-Isobutene-Isoprene Rubber	Bromobutyl
CIIR	Chloro-Isobutene-Isoprene Rubber	Chlorobutyl
GROUP C - Initial Storage Period 10 Years, Extension Storage Period 5 Years		
CSM	Chlorosulfonylpolyethlene	Chlorosulfonated Polyethylene
EPDM	Terpolymer of Ethylene.Propylene and Diene (Residual Unsaturated Portion)	EPDM
FKM	Rubber having Fluoro, Perfluoroalkyl or Perfluoroalkoxy Substituent Groups	Fluorocarbon
VMQ	Silicone Rubber having both MEthyl and Vinyl Substituent Group	Silicone
GROUP D - Storage Period is Unlimited		
PTFE	Polytetrafluoroethylene	Teflon

Technical Proposal Request

Email: sales@triada.co.in

Note: Only information provided in this TPR will be considered for the recommended solution

Prepared By:
Date Prepared:
Answers Required By:

Application Engr:
Sales Engr:
Inside Sales:

TTIPL TPR
Cust.

CUSTOMER DETAILS

Customer No
Cust. Seg. Code

Name
Address

Contact
Phone
Mobile
Email

APPLICATION DESCRIPTION

Equipment:
Component:
Problem (if any):
Current Seal:

System Type
- ☐ Rod
- ☐ Piston
- ☐ System (rod+piston)
- ☐ Shaft
- ☐ Face

Product
- ☐ Seal
- ☐ Wiper
- ☐ Bearing
- ☐ Other

New Design ☐

Motion
- ☐ Static
- ☐ Reciprocating
- ☐ Rotary
- ☐ Oscillatory

Pressure
- ☐ Unidirectional
- ☐ Bi-directional
- ☐ Pulsating
- ☐ Without Pressure

Demand/Year:
Quote Qty:
Price: @ Pcs.
Target @ Pcs.

OPERATING CONDITIONS

Media to Seal:
Other Media:
Contamination:

	Units	Minimum	Operating	Maximum
Temperature				
Pressure				
Vacuum				
Stroke				
Cycle-Rate				
Angle of Rotation				
RPM				
Velocity				
Side Load				

PERFORMANCE PRIORITY

Most critical:

Planning Test? Yes ☐ No ☐

	Units	Value
Expected Life:		
Max Leakage:		

	Units	Breakout	Dynamic
Friction:			
Torque:			

HARDWARE

Units ☐ Inch ☐ Metric

	Nominal	Tolerance	Change
Rod Diameter:			☐
Bore Diameter:			☐
Rod Bore:			☐
Piston Diameter:			☐
Gland/Groove Width:			☐
Gland Depth:			☐
Groove Diameter:			☐
Extrusion Gap:			☐
Runout (TIR):			☐
Step Height:			☐
Bearing length:			☐

Type ☐ Split ☐ Open ☐ Solid ☐ Stepped ☐ Recommend

Material	Finish	Hardness	Coating/Treatment

Notes:

Solution Proposed to Customer by TTIPL:

MIL-G-5514 Dash: AS 4716 Dash: B/U Width:

Required: ☐ Installation Dwg ☐ Inspection Dwg ☐ Quote
☐ Other

Prototype Qty:
Production Qty:
Date Proto's

SPECIFICATIONS

Automatic installation? Explain details	No ☐ Yes ☐	Spec.
Existin g Customer spec?	No ☐ Yes ☐	Ref.
Existing Customer product drawing?	No ☐ Yes ☐	Ref.
Existing Customer material spec?	No ☐ Yes ☐	Ref.

Other requirements if any :

QUALITY CHARACTERISTICS

Inspection level

According to TTIPL Specification: ☐
Special Request: ☐

(e.g. for O Ring, AQL1.0 for surface defects
acc. ISO 3601/3 grade N)

Existing inspection plan, if any?	No ☐ Yes ☐	Ref.
Certificate required? If yes, specify	No ☐ Yes ☐	Ref.
Additional Quality guidelines?	No ☐ Yes ☐	Ref.

ENCLOSURES

	Pages – specifications		Samples
	Drawings		Others

ADDITIONAL INFORMATION

Referring to:
Service Performance (friction, leakage, shelf life, ext/int pollution, etc.):

Use (frequency, cycles, exposure time, etc.)

Logistic / Packaging (any special packaging requirements?):

Sketch/Drawing:

Triada Sealing Guide

#Sealingexcellence

www.triada.co.in

+91 8088 TRIADA (874232)

triada@triada.co.in

No. 851/A, 1st & 2nd Floor, B-Block, AECS Layout | Singasandra | Bangalore - 560 068, Karnataka | India